Petition

Supreme Court, U.S.
FILED
APR 20 1982
ALEXANDER L. STEVAS
CLERK

81-1945

No. ....
IN THE

Supreme Court of the United States

October Term, 1981

PACIFIC GAS AND ELECTRIC COMPANY and SOUTHERN CALIFORNIA EDISON COMPANY,

Petitioners,

vs.

STATE ENERGY RESOURCES CONSERVATION AND DEVELOPMENT COMMISSION, *et al.*,

Respondents.

Petition for Writ of Certiorari to the United States Court of Appeals for the Ninth Circuit.

JOHN R. MCDONOUGH,
HOWARD B. SOLOWAY,
Counsel of Record,
BALL, HUNT, HART, BROWN AND BAERWITZ,
450 North Roxbury Drive,
Beverly Hills, Calif. 90210,
(213) 278-1960,
Attorneys for Petitioners.

Parker & Son, Inc., Law Printers, Los Angeles. Phone 724-6622

Questions Presented for Review.

This petition seeks the authoritative determination by this Court of the allocation which Congress has legislated, as between the federal and state governments, of the power to prohibit or regulate the construction and operation of nuclear power plants. The District Court below, the District Court in the companion *Pacific Legal Foundation* case, and the United States Court of Appeals for the Eighth Circuit in *Northern States Power Co. v. Minnesota*, 447 F.2d 1143 (1971), *aff'd*, 405 U.S. 1035 (1972) (*"Northern States"*), all have held that this power is exclusively vested in the federal government. The United States Court of Appeals for the Ninth Circuit has held otherwise in this case. Petitioners seek to have this conflict resolved and the underlying issue of great national importance decided. The specific questions presented for review are:

1. Whether the provisions of a California statutory scheme (the Warren-Alquist Act, California Public Resources Code § 25000 *et seq.*) which regulate and under certain circumstances prohibit the construction and operation of nuclear power plants in that State are void under the Supremacy Clause of the United States Constitution because they are preempted by and impermissibly in conflict with the federal statutory scheme (the Atomic Energy Act of 1954, as amended, 42 U.S.C. § 2011 *et seq.*) which was enacted to promote the private development of nuclear energy and, to that end, authorizes the United States Nuclear Regulatory Commission to regulate the construction and operation of nuclear power plants.

2. Whether petitioners' claim of federal preemption of certain provisions of the Warren-Alquist Act is ripe for adjudication in light of the District Court's findings, affirmed by the Court of Appeals, that (a) petitioners have

been and are presently being injured by those elements of the California statutory scheme and (b) this injury will be redressed by invalidation of the California statutes that cause petitioners' injury.

Parties.

Petitioners are two California public utilities, Pacific Gas and Electric Company ("PGandE") and Southern California Edison Company ("Edison"). They were the plaintiffs in the action filed in the District Court.[1]

Respondents are (1) defendants below, the California State Energy Resources Conservation and Development Commission ("State Energy Commission") and its individual members, Russell Schweickart, Emilio E. Varanini, III, James Walker, Arturo Gándara and Karen Edson,[2] and (2) intervenors below, Natural Resources Defense Council, Inc., Sierra Club, Environmental Defense Fund and Californians for Nuclear Safeguards.

---

[1] The parent companies, subsidiaries (except wholly owned subsidiaries) and affiliates of PGandE and Edison are (1) for PGandE: Pacific Gas Transmission, Alberta Natural Gas Company Limited, Standard Pacific Gas Line, Incorporated, and Pacific Indonesian LNG Company; (2) for Edison: Calabasas Park Co., Inc., Calabasas Communications Co., and Calabasas Park Co.

[2] Arturo Gándara and Karen Edson are successors to Commission members C. Suzanne Reed and Ronald D. Doctor, named as defendants in the first amended complaint.

TABLE OF CONTENTS

	Page
Questions Presented for Review	i
Parties	ii
Opinion Below	1
Jurisdiction	2
Constitutional, Statutory and Regulatory Provisions	2
Statement of the Case	2
A. The Federal Regulatory Scheme	2
B. California's Conflicting Regulatory Scheme	4
C. Proceedings in the District Court	5
D. The Decision of the Court of Appeals	7
1. Standing and Ripeness	7
2. Preemption	8
Reasons for Granting the Writ	9
A. Preliminary Statement	9
B. A Summary of Petitioner's Preemption Argument	10
C. The 1954 Act Preempts State Prohibition or Regulation of Construction and Operation of Nuclear Power Plants to the Extent These Activities Are Regulated by the NRC	12
1. The 1954 Act	12
2. The 1959 Legislation	15
D. The California Nuclear Statutes Are Void Because They Invade a Federally Preempted Regulatory Field and Conflict With Congress' Purposes Respecting Nuclear Power Plants	18
1. Section 25524.2 of the Warren-Alquist Act Is Void	18

Page

2. Sections 25503, 25504 and 25516 Are Void 20

3. The Provisions of the Warren-Alquist Act Invalidated by the District Court but Not Reviewed on the Merits of the Preemption Issue by the Court of Appeals Are Void .. 20

E. All of the Preemption Claims Asserted by Petitioners Are Ripe for Review 24

Conclusion 27

TABLE OF AUTHORITIES

Cases — Page

Duke Power Co. v. Carolina Environmental Study Group, Inc., 438 U.S. 59 (1978) 12

National Resources Defense Council, Inc. v. United States Nuclear Regulatory Commission, 582 F.2d 166 (2d Cir. 1978) 19

Northern States Power Co. v. Minnesota, 447 F.2d 1143 (1971) aff'd 405 U.S. 1035 (1972) (Northern States) ..... i, 10

Pacific Gas and Electric Co. v. State Energy Resources Conservation and Development Commission, 489 F.Supp. 699 (E.D. Cal. 1980) ..... i, 2

Pacific Legal Foundation v. State Energy Resources Conservation & Dev. Comm'n., 472 F.Supp. 191 (1979) 1

Pacific Legal Foundation v. State Energy Resources Conservation and Development Commission, 659 F.2d 903 (9th Cir. 1981) 1, 7, 10, 17, 18, 25, 26

Perez v. Campbell, 402 U.S. 637 (1971) 11, 20

Ray v. Atlantic Richfield Co., 435 U.S. 151 (1978) .. 10

Rice v. Santa Fe Elevator Corp., 331 U.S. 218 (1947) 10

Train v. Colorado Public Interest Research Group, Inc., 426 U.S. 1 (1976) 10

Constitution

United States Constitution, Art. VI, Clause 2 2

Federal Regulations

Code of Federal Regulations, Title 10, Sec. 2.714 21

Code of Federal Regulations, Title 10, Sec. 2.715(c) . 21

Code of Federal Regulations, Title 10, Sec. 50.34 23

Page

Code of Federal Regulations, Title 10, Sec. 50.36 23

Code of Federal Regulations, Title 10, Sec. 150.15(a)(1) 21

Miscellaneous

California Assembly Committee on Resources Land Use and Energy: "Reassessment of Nuclear Energy in California: A Policy of Proposition 15 and Its Alternatives" (1976), p. 155 ..... 18, 19

100 Cong. Rec. p. 12015 (1954) 14

H.R.Rep. No. 2181, 83d Cong., 2d Sess. (1954) 13

S. Rep. No. 870, 86th Cong., 1st Sess., p. 9 16

Senate Report No. 1699, 83d Cong., 2d Sess. (1954), reprinted in (1954) U.S. Code. Cong. & Ad. News, p. 3456 13

Statutes

California Health and Safety Code, Sec. 25876 15

California Public Resources Code, Sec. 25000 et seq. ..... i, 4

California Public Resources Code, Secs. 25000-25986 2

California Public Resources Code, Sec. 25217(c) 21

California Public Resources Code, Sec. 25219 21

California Public Resources Code, Sec. 25220 21

California Public Resources Code, Sec. 25500 ..... 6, 8, 20, 24

California Public Resources Code, Sec. 25502 ..... 6, 8, 20, 24

California Public Resources Code, Sec. 25503 ..... 6, 8, 20, 24, 25

Page

California Public Resources Code, Sec. 25504 ..... 6, 8, 20, 24, 25
California Public Resources Code, Sec. 25511 ..... 6, 8, 20, 22, 24
California Public Resources Code, Sec. 25512 ..... 6, 8, 20, 24
California Public Resources Code, Sec. 25514 ..... 6, 8, 20, 24
California Public Resources Code, Sec. 25516 ..... 6, 8, 20, 24, 25
California Public Resources Code, Sec. 25517 ..... 6, 8, 20, 24
California Public Resources Code, Sec. 25519 ..... 6, 8, 20, 24
California Public Resources Code, Sec. 25520 ..... 6, 8, 20, 24
California Public Resources Code, Sec. 25523 ..... 6, 8, 20, 24
California Public Resources Code, Sec. 25524.1 5
California Public Resources Code, Sec. 25524.1(a) ... 6
California Public Resources Code, Sec. 25524.1(b) ... 6, 8, 21, 24
California Public Resources Code, Sec. 25524.2 ..... 5, 6, 8, 18, 19, 24, 25, 26
California Public Resources Code, Sec. 25524.3 .. 5, 6
California Public Resources Code, Sec. 25528 ..... 6, 8, 21, 24
California Public Resources Code, Sec. 25532 ..... 6, 8, 20, 24
United States Code, Title 28, Sec. 1254(1) 2

Page

United States Code, Title 28, Sec. 1331(a) 5
United States Code, Title 28, Sec. 1337 5
United States Code, Title 42, Sec. 2011 et seq. .....
..... i, 2, 13
United States Code, Title 42, Secs. 2011-2296 2
United States Code, Title 42, Sec. 2012 13
United States Code, Title 42, Sec. 2013 13
United States Code, Title 42, Sec. 2018 14
United States Code, Title 42, Sec. 2021 ..... 15, 16
United States Code, Title 42, Sec. 2021(a)(1) 15
United States Code, Title 42, Sec. 2021(b) 15
United States Code, Title 42, Sec. 2021(c) .....
..... 15, 16, 17, 21
United States Code, Title 42, Sec. 2021(k) 16
United States Code, Title 42, Sec. 2131 13
United States Code, Title 42, Sec. 2132 13
United States Code, Title 42, Sec. 2133 13
United States Code, Title 42, Sec. 2201 14
United States Code, Title 42, Sec. 2210 3
United States Code, Title 42, Sec. 2210(c) 3
United States Code, Title 42, Sec. 2235 13
United States Code, Title 42, Sec. 2236 14

No. ....

IN THE

Supreme Court of the United States

October Term, 1981

PACIFIC GAS AND ELECTRIC COMPANY and SOUTHERN CALIFORNIA EDISON COMPANY,

Petitioners,

vs.

STATE ENERGY RESOURCES CONSERVATION AND DEVELOPMENT COMMISSION, *et al.*,

Respondents.

Petition for Writ of Certiorari to the United States Court of Appeals for the Ninth Circuit.

OPINION BELOW.

The opinion of the Court of Appeals is reported as *Pacific Legal Foundation v. State Energy Resources Conservation and Development Commission*, 659 F.2d 903 (9th Cir. 1981).[3] The opinion of the District Court is reported as *Pacific Gas and Electric Co. v. State Energy Resources*

[3]The Court of Appeals consolidated appeals by the State Energy Commission from two district court decisions — one from the Eastern District of California (the action brought by PGandE and Edison) and the other from the Southern District of California (an action brought by Pacific Legal Foundation and others and reported as *Pacific Legal Foundation v. State Energy Resources Conserv. & Dev. Comm'n.*, 472 F. Supp. 191 (1979)).

Conservation and Development Commission, 489 F. Supp. 699 (E.D. Cal. 1980).

JURISDICTION.

The judgment of the United States Court of Appeals for the Ninth Circuit was entered on October 7, 1981. Petitioners' petition for rehearing was timely filed on October 21, 1981. The order denying the petition for rehearing was filed January 20, 1982.

Jurisdiction of this Court is invoked pursuant to 28 U.S.C. § 1254(1).

CONSTITUTIONAL, STATUTORY AND REGULATORY PROVISIONS.

This case involves the following constitutional, statutory and regulatory provisions:

United States Constitution, Article VI, Clause 2 (Supremacy Clause):

> This Constitution, and the Laws of the United States which shall be made in Pursuance thereof; and all Treaties made, or which shall be made, under the Authority of the United States, shall be the supreme Law of the Land; and the Judges in every State shall be bound thereby, any Thing in the Constitution or Laws of any State to the Contrary notwithstanding.

The Atomic Energy Act of 1954, as amended, 42 U.S.C. §§ 2011-2296, Title 10 of the Code of Federal Regulations, and the Warren-Alquist State Energy Resources Conservation and Development Act, California Public Resources Code §§ 25000-25986, relevant portions of which are set forth in the Appendix.

STATEMENT OF THE CASE.

A. The Federal Regulatory Scheme.

By the Atomic Energy Act of 1954, as amended, 42 U.S.C. § 2011 *et seq.* ("the 1954 Act"), Congress determined, among other things, to authorize, encourage and

foster private utilization of nuclear power to generate electricity — a policy that Congress has continued to support.[4] To this end the Atomic Energy Commission ("AEC") was given plenary and pervasive jurisdiction over the issuance of licenses to construct and operate nuclear power plants, a jurisdiction that in 1974 was transferred to the Nuclear Regulatory Commission ("NRC"). Both the NRC and the predecessor AEC have promulgated numerous regulations (codified in 10 C.F.R.) governing nuclear power plant licensing, construction and operation.

The 1954 Act and attendant regulations require a public utility desiring to build and operate a nuclear power plant to apply to the NRC, successively, for a construction permit and an operating license. In determining whether to grant such permit and license, the NRC requires the applicant to furnish detailed information pertaining to and makes decisions concerning a great variety of subjects, including but not limited to the geology and seismology of the proposed site of the plant, population density in the surrounding area, the design of the proposed plant and its safety systems, the applicant's proposed quality assurance program, and the impact of the plant on the environment. In addition, the NRC inspects both the construction and the operation of the nuclear power plant to insure that they conform to the requirements of the 1954 Act and its implementing regulations. To petitioners' knowledge there is no comparable instance of minutely-detailed federal regulation of private endeavor to effectuate federal policy.

---

[4]One manifestation of the continuing interest of Congress in the promotion of the use of nuclear power to generate electricity is found in the enactment of the Price-Anderson Act in 1957, 42 U.S.C. § 2210, and its extension in 1965 for ten years and in 1975 when it was extended until 1987, 42 U.S.C. § 2210(c).

B. California's Conflicting Regulatory Scheme.

The Warren-Alquist State Energy Resources Conservation and Development Act, as amended, California Public Resources Code § 25000 *et seq.* ("the Warren-Alquist Act"), requires an applicant to build a nuclear power plant in California first to file with the State Energy Commission a notice of intention to file an application for certification ("NOI"), after which filing the Commission conducts a review process for a period of not to exceed 12 months. If the NOI is approved, the applicant must then file an application for certification ("AFC"), after which filing the State Energy Commission conducts a further review process for not to exceed 18 months. *In the course of the NOI and AFC proceedings, the State Energy Commission is authorized and required to make determinations pertaining to virtually every matter which is the subject of determinations by the NRC in its licensing process.* These include but are not limited to the geology and seismology of the proposed site for the nuclear power plant, limitation of population density in the surrounding area, and the design of the proposed plant and its safety systems. *Unless certification is granted by the State Energy Commission, the proposed nuclear power plant cannot be constructed, even though it would qualify for licensing by the NRC.* If a nuclear power plant is ultimately certified by the State Energy Commission, the certification must contain specifications for the construction of the plant, and the Commission is required both to monitor construction to see that it conforms to those requirements and to monitor the operation of the facility after it becomes operational.

If this regulatory scheme were to remain in effect, as the Court of Appeals has decided it should, the result would be that at every step during the process of constructing and operating a California nuclear power plant, a public utility

would be required to serve two exacting taskmasters: the federal NRC and its counterpart "little NRC," the State Energy Commission.

C. Proceedings in the District Court.

Petitioners, PGandE and Edison, commenced this action by filing in the District Court a complaint for declaratory relief. Jurisdiction was invoked pursuant to 28 U.S.C. §§ 1331(a) and 1337, the plaintiffs alleging that certain provisions of the Warren-Alquist Act regulating and in some instances prohibiting the construction and operation of nuclear power plants are invalid under the Supremacy Clause because they are preempted by and in conflict with federal law.

On April 25, 1980, after trial on the issue of standing and adjudication of all other issues as a matter of law in response to plaintiffs' motion for summary judgment, the District Court filed its opinion, separate findings of fact and conclusions of law, and judgment in favor of PGandE and Edison. The Court held that plaintiffs have standing to challenge the validity of the California statutes, that the issues presented are ripe for adjudication, and that 19 provisions of the Warren-Alquist Act are invalid as applied to nuclear power plants because they are preempted by and in conflict with the 1954 Act.

The statutes declared invalid by the District Court's judgment fall into two categories. The first category comprises three statutes (California Public Resources Code §§ 25524.1, 25524.2 and 25524.3) enacted in 1976 as amendments to the Warren-Alquist Act, each of which as enacted indefinitely *prohibited* the construction of new nuclear power plants in California pending certain decisions and action by the State Energy Commission and the California Legislature. These statutes, applying only to nuclear power plants

and collectively referred to hereinafter as "the 1976 statutes," were held to be wholly void.[5]

The second category of 16 statutes held invalid are provisions of the 1975 Warren-Alquist Act generally applicable to thermal electric power generating facilities, both nuclear and non-nuclear. These statutes and other provisions of the Warren-Alquist Act condition construction of the electric power plants to which they apply upon the granting of "certification" (permission for construction) by the State Energy Commission. The 16 statutes held invalid by the District Court, referred to hereinafter collectively as "the 1975 statutes," were held void *insofar as they apply to nuclear power plants* because these California statutes purport to empower and require the State Energy Commission to regulate aspects of nuclear power plant construction and operation which are subject to regulation by the NRC under the 1954 Act.

More particularly, California Public Resources Code § 25528, concerning limitation of population density in the area surrounding a power plant, was held invalid by the District Court insofar as it applies to nuclear power plants; California Public Resources Code §§ 25503, 25504 and 25516 were invalidated insofar as they impose a "three-site review" requirement upon nuclear power plant proposals before the State Energy Commission; and California Public Resources Code §§ 25500, 25502, 25504, 25511, 25512, 25514, 25516, 25517, 25519, 25520, 25523, and 25532

---

[5]While all three of these statutes were properly invalidated by the District Court, petitioners' challenge to Sections 25524.1(a) and 25524.3 was held moot by the Court of Appeals. This part of the appellate court's decision is not challenged in this petition, in order to narrow the issues presented for review. Petitioners do challenge the appellate court's decision concerning Sections 25524.1(b) and 25524.2, for the reasons discussed at 18-20, 24-27, *infra*.

(sometimes referred to herein as "the certification system statutes") were held invalid insofar as they (1) authorize or require the State Energy Commission to regulate or prohibit nuclear power plant construction or operation on the basis of "inquiries or determinations respecting any aspect of the construction or operation of nuclear power plants that falls within the regulatory jurisdiction of the United States Nuclear Regulatory Commission pursuant to the [1954] Act or regulations, rules or guidelines promulgated pursuant to the [1954] Act," or (2) directly or indirectly require the submission of information to the State Energy Commission for the purpose of enabling it to determine whether to take any of the substantive actions held impermissible.[6]

D. The Decision of the Court of Appeals.

1. Standing and Ripeness.

The Court of Appeals affirmed the District Court's decision that PGandE and Edison have standing to challenge all of the California nuclear statutes which the District Court invalidated, stating that:

> Because the challenged statutes stand as an absolute barrier to construction of the proposed plants, and because that barrier will be removed if the utilities secure the injunctive [*sic*] relief they seek, it is irrelevant that an injunction [*sic*] would not guarantee that the plants will be built. [Citation omitted.] It is sufficient that the utilities intend to proceed if the statutes are invalidated. The utilities therefore have standing to sue.

659 F.2d at 915.[7]

---

[6]The term "California nuclear statutes" will be used hereinafter to denote, collectively, the 1976 statutes and the 1975 statutes to the extent that the latter were held by the District Court to invade the NRC's regulatory jurisdiction under the 1954 Act.

[7]The basis for these conclusions is set forth and discussed at 24-27, *infra*.

Having made these determinations, the Court of Appeals nevertheless held that the validity of only four of the challenged California statutes was ripe for review: § 25524.2 imposing a prohibition, characterized by the court below as a "moratorium," on construction of nuclear power plants in California until California is satisfied concerning disposal of nuclear waste, and §§ 25503, 25504 and 25516, which require a utility to include at least three alternative nuclear power plant sites in its NOI. Unaccountably, the Court of Appeals held *not* ripe for review § 25524.1(b) of the 1976 statutes and 13 of the 1975 statutes declared void by the District Court — §§ 25500, 25502, 25504, 25511, 25512, 25514, 25516, 25517, 25519, 25520, 25523, 25528 and 25532. This decision of the Court of Appeals was clearly erroneous for the reasons discussed at 24-27, *infra*.

2. Preemption.

Turning to the merits of the issues on appeal, the Court of Appeals held that the 1976 nuclear waste disposal statute, § 25524.2, and three of the 1975 statutes, §§ 25503, 25504 and 25516 (imposing a three-site review requirement), are not preempted by or in conflict with the 1954 Act, reversing the decision of the District Court on these issues. The appellate court held that the 1954 Act preempts only regulation of radiological hazards and that the California statutes which it upheld were not enacted for the purpose of protection against such hazards.[8] By this decision and by holding that the other issues presented by respondents' appeal from the District Court's judgment are not ripe for review, the Court of Appeals left unresolved the nationally important question whether the several states can validly regulate myriad as-

---

[8]As we show at 18-19, 21-24, *infra*, the Court of Appeals' conclusion that these California statutes it upheld were not enacted for protection against radiological hazards is erroneous.

pects of the construction and operation of nuclear power plants that are regulated by the NRC, provided only that the states are careful to assert, in doing so, that they are acting for purposes other than protection against radiation hazards.

REASONS FOR GRANTING THE WRIT.

A. Preliminary Statement.

The central substantive issue presented by this petition is whether Congress, in enacting and amending the 1954 Act, intended there to coexist two regulatory agencies — one federal and one state — each empowered to decide in minute detail, for its own reasons, whether, where and how nuclear power plants may be constructed and operated. In this case the Ninth Circuit has answered that question in the affirmative, holding that California may *prohibit or regulate* nuclear power plant construction and operation as long as California asserts that it is doing so for purposes other than protection against radiation hazards.

The Court of Appeals' decision, if permitted to stand, would sound the death knell for the construction and operation of new nuclear power plants in California. *First*, the decision continues in effect indefinitely a California *prohibition* of the construction of such plants until California authorities are satisfied that a satisfactory method of disposing of nuclear wastes exists. *Second* — and more important — the decision below leaves in existence a bramble bush of dual, overlapping, and potentially conflicting state and federal regulation which no public utility could rationally undertake to enter. Indeed, petitioners' executives testified unequivocally at trial that, faced with this prospect, they cannot plan for the construction of additional nuclear power plants in California. It was on the basis of this testimony that the District Court found and the Court of Ap-

peals affirmed that "the challenged statutes stand as *an absolute barrier* to construction of the [PGandE and Edison] proposed [nuclear power] plants . . . ." 659 F.2d at 915 (emphasis added.) It follows that unless the Court of Appeals' decision is reviewed and reversed or at least substantially modified by this Court, the 1954 Act is effectively repealed in California.

The Eighth Circuit Court of Appeals in *Northern States*, faced with a far less drastic Minnesota challenge to the 1954 Act, invalidated that state's legislation. The Court held that the federal government "has *exclusive* authority under the doctrine of preemption to regulate the construction and operation of nuclear power plants," 447 F.2d at 1154 (emphasis added), rejecting Minnesota's contention that dual control over atomic power plants and the level of effluents discharged therefrom is permissible under the 1954 Act. 447 F.2d at 1149.[9] The obvious conflict between *Northern States* and the Court of Appeals' decision in this case now should be resolved.

B. A Summary of Petitioners' Preemption Argument.

This Court noted in *Rice v. Santa Fe Elevator Corp.*, 331 U.S. 218, 230 (1947), that a congressional preemptive purpose may be evidenced in several ways, including the pervasiveness of the federal regulatory scheme, and in *Ray v. Atlantic Richfield Co.*, 435 U.S. 151, 158 (1978), that even if Congress has not completely foreclosed state legislation in a particular case, a state statute is void to the extent that it actually conflicts with a valid federal statute, *i.e.*, "where

---

[9]This Court in reaffirming *Northern States* declared that under the 1954 Act "States are precluded from playing *any role* in several significant areas of regulation [of nuclear power plants]." *Train v. Colorado Public Interest Research Group, Inc.*, 426 U.S. 1, 16 n.12 (1976) (emphasis added.)

compliance with both federal and state regulations is a physical impossibility . . .," [citation omitted] or "where the state law stands as an obstacle to the accomplishment and execution of the full purposes and objectives of Congress." [Citations omitted.]

It is elementary preemption doctrine that state legislation, the thrust of which is either preempted by or in conflict with federal law, cannot be redeemed by a state legislature's declaration of some otherwise valid state purpose. In *Perez v. Campbell*, 402 U.S. 637, 651-652 (1971), this Court refused any longer to follow "the aberrational doctrine of *Kesler* and *Reitz* that state law may frustrate the operation of federal law as long as the state legislature in passing its law had some purpose in mind other than one of frustration," because "such a doctrine would enable state legislatures to nullify nearly all unwanted federal legislation *by simply publishing a legislative committee report articulating some state interest or policy — other than frustration of the federal objective — that would be tangentially furthered by the proposed state law*." (Emphasis added.)

Pursuant to the foregoing principles, the California nuclear statutes invalidated by the District Court are preempted by and in conflict with the 1954 Act, because:

1. By prohibiting construction of nuclear power plants for reasons to be determined by the State and by mandating detailed independent state regulation of the same matters that are regulated by the NRC, the California nuclear statutes frustrate the federal purpose of promoting nuclear power under strict and comprehensive federal regulation and threaten inevitable conflicts between the two regulatory systems.

2. The Court of Appeals' decision to the contrary notwithstanding, a major purpose of the California nuclear statutes is to authorize and require the State

Energy Commission to regulate the construction and operation of nuclear power plants for protection against radiological hazards, a subject of regulation which even the court below recognized is preempted by Congress.

3. Even if the California nuclear statutes had been enacted for a purpose other than to protect against radiation hazards and/or to frustrate the federal regulatory scheme, the statutes would be void because: (a) they frustrate the federal purpose of promoting the development of nuclear power; (b) they conflict with the pervasive federal regulatory scheme; and (c) they make it impossible for the federal system of regulation to work as a practical matter.

C. The 1954 Act Preempts State Prohibition or Regulation of Construction and Operation of Nuclear Power Plants to the Extent These Activities Are Regulated by the NRC.

1. The 1954 Act.

The 1954 Act legislated a federal policy that has been described by this Court as follows:

> [In 1954] Congress concluded that the national interest would be best served if the Government encouraged the private sector to become involved in the development of atomic energy for peaceful purposes under a program of federal regulation and licensing. See H.R. Rep. No. 2181, 83d Cong, 2d Sess., 1-11 (1954). The [1954] Act implemented this policy decision, providing for licensing of private construction, ownership and operation of commercial nuclear power reactors for energy production *under strict supervision by the Atomic Energy Commission*.

Duke Power Co. v. Carolina Environmental Study Group, Inc., 438 U.S. at 59, 63 (1978) (footnote omitted) (emphasis added).

Provisions of the 1954 Act which are still in effect reveal the Congressional purpose to encourage private nuclear power plant development subject to strict federal government supervision by AEC regulation, through licensing, of the construction and operation of nuclear power plants. 42 U.S.C. §§ 2011, 2012 and 2013.[10] The Act's comprehensive AEC licensing system for nuclear power plants contains detailed regulatory provisions. 42 U.S.C. § 2131 makes it unlawful for any person to construct or operate a nuclear power plant without a license issued by the AEC. Section 2132 provides for issuance of such licenses under the conditions specified in Section 2133, which includes requirements designed to insure both the public health and safety and the common defense and security of the nation. These provisions continue in effect to this day, except only for the fact that in 1974 the AEC was abolished and its regulatory functions transferred to the NRC.

As amended to date, the 1954 Act further provides that a license to operate a nuclear power plant may be granted only after the plant is built pursuant to a construction permit issued by the NRC. 42 U.S.C. § 2235. The Act includes detailed provisions pertaining to the form and contents of construction permit and operating license applications, requiring information about the proposed nuclear power plant's technical specifications, its place of use, and specific characteristics of the facility, as well as information concerning the qualifications of the applicant. As amended in 1962, the 1954 Act authorized the AEC (now the NRC) to

---

[10]In addition to the statutory language, the legislative history of the 1954 Act evidences the Congressional purpose of encouraging private development of nuclear power subject to federal regulation. See, S. Rep. No. 1699, 83d Cong., 2d Sess. (1954), *reprinted in* [1954] U.S. Code Cong. & Ad. News 3456, and H.R. Rep. No. 2181, 83d Cong., 2d Sess. (1954).

establish atomic safety and licensing boards to conduct hearings and make decisions with respect to the granting, suspending, revoking or amending of any construction permit or operating license. 42 U.S.C. § 2236.

The authority of the federal government over the construction and operation of nuclear power plants has been greatly expanded by extensive regulations issued by the AEC and the NRC pursuant to 42 U.S.C. § 2201. These regulations govern the construction and operation of utilization facilities (which include nuclear power plants) and are codified in Title 10 of the Code of Federal Regulations, relevant provisions of which are set forth in Appendix 7 at 111 *et seq*. They provide detailed procedures for the licensing of nuclear power plant construction and operation, exerting the NRC's authority over a multitude of substantive aspects thereof, including: (1) siting (which includes questions of site geology, seismology and local population density); (2) design of the nuclear power plant's buildings, systems, and components, including safety features: and (3) operational safety.[11]

---

[11]It is true that 42 U.S.C. § 2018, a provision of the original 1954 Act, provides that the Act should not "be construed to affect the authority or regulations of any Federal, State or local agency with respect to the generation, sale, or transmission of electric power produced through the use of nuclear facilities licensed by the Commission." Read in context with other provisions of the 1954 Act, however, Section 2018 cannot be interpreted as being intended to give the States plenary regulatory authority over nuclear power plant construction and operation. Instead, Section 2018 was designed to assure that the States would maintain their traditional authority over the transmission, sale and use of electrical power *after* it is generated by a nuclear power plant and enters the electric power distribution system. Thus, Senator Hickenlooper, the floor manager in 1954 of the Senate bill, explained: "We take the position that electricity is electricity. *Once it is produced* it should be subject to the proper regulatory body, whether it be the Federal Power Commission . . . or State regulatory bodies. . . . [§ 2018] is designed to keep the regulatory authority exactly as it is now, traditionally and under the law." 100 Cong. Rec. 12015 (1954) (emphasis added).

2. The 1959 Legislation.

In 1959 Congress amended the 1954 Act for the specific purpose, among others, of clarifying the respective responsibilities of the AEC and the States with respect to atomic energy. 42 U.S.C. § 2021(a)(1). By this 1959 amendment, Congress made explicit what previously had been implicit: that the 1954 Act had established a preempted and exclusive field of federal regulation.

42 U.S.C. § 2021(b) provides for the assumption of *limited* regulatory authority by the States, through written agreements between the State governors and the AEC (now NRC).[12] However, 42 U.S.C. § 2021(c) placed severe limitations on the regulatory authority the States may be granted, providing that: "No agreement entered into pursuant to subsection (b) of this section shall provide for discontinuance of any authority and the [Atomic Energy] Commission *shall retain authority and responsibility* with respect to regulation of — (1) the construction and operation of any production or utilization facility . . . ." (Emphasis added.) A clearer manifestation of the specific intent of Congress that the AEC was to continue to have *exclusive* authority to regulate the construction and operation of nuclear power plants could hardly have been legislated. Moreover, the plain meaning of this legislative language is buttressed by the report of the Joint Committee on Atomic Energy which, in referring to 42 U.S.C. § 2021, stated:

> (2) The bill applies to some, but not all, atomic energy activities now regulated exclusively by AEC. . . .

---

[12]While California entered into such a written agreement in 1962 (California Health and Safety Code § 25876), the provisions and scope of the Warren-Alquist Act go far beyond the scope of that agreement and vastly exceed the limitations which California agreed to accept as a condition of being granted the limited powers contemplated by Section 2021(b).

> Licensing and regulation of more dangerous activities — such as nuclear reactors — will remain the *exclusive* responsibility of the Commission. Thus *a line is drawn* between types of activities deemed appropriate for regulation by individual States at this time, and other activities *where continued AEC regulation is necessary*.

(Emphasis added.)[13]

It is true that 42 U.S.C. § 2021(k), upon which the Court of Appeals placed substantial weight, provides that "[n]othing in this section shall be construed to affect the authority of any State or local agency to regulate activities for purposes other than protection against radiation hazards." The Court below misread this provision. When considered in context with subsection (c) of Section 2021, the legislative history of the 1954 Act quoted and cited above, and the pervasive federal preemption manifested in the 1954 Act itself,[14] subsection (k) clearly was *not* intended by Congress to authorize regulation by states and local agencies, *for any purpose*, of those matters pertaining to the construction and operation of nuclear power plants *which are subject to regulation by the NRC*. Instead, what Congress intended to authorize was state and local agency regulation of matters *not* within the province of federal regulation — *e.g.*, the authority or responsibility to make decisions concerning the need for additional electric power generating capacity, the absolute or

---

[13]The Joint Committee report also said: "[§ 2021] is not intended to leave *any room* for the exercise of *dual* or *concurrent* jurisdiction by States to control radiation hazards. . . . The intent is to have the material regulated and licensed *either* by the Commission *or* by the State . . ., *but not by both*. . . ." S. Rep. No. 870, 86th Cong., 1st Sess., at 9 (emphasis added).

[14]Section 2021(k) on its face is limited and narrow because it refers only to Section 2021, as distinguished from the entire 1954 Act. Thus subsection (k) has no impact upon the implied preemption effected by the 1954 Act as a whole.

relative cost acceptability of a nuclear plant, electric power ratemaking, including the determination whether and to what extent to add the cost of a nuclear facility to a utility's rate base, or the sale or transmission of electric power produced by nuclear facilities. But Congress could *not* have intended regulation by a State — or a local agency such as a city or county — of the design of the nuclear reactor component of a nuclear power plant, *whatever purpose might be ascribed to such state or local regulation.*

Indeed, the Court of Appeals itself recognized the absurdity of attributing such an intention to Congress when it said, in footnote 29 of its opinion:

> State regulations which directly conflict with regulations of the NRC would, of course, be preempted even if they were enacted for purposes other than protection against radiation hazards. If the NRC required a nuclear plant to be constructed in a certain way for safety reasons, for example, a state could not require the plant to be constructed some other way for environmental reasons. (Citation omitted).

659 F.2d at 922. What the Court of Appeals did not understand is that this fundamental principle, which it relegated to a footnote, can *only* be given effect (1) by interpreting Section 2021(c) as being intended to preserve the *exclusivity* of the NRC's jurisdiction and actions in respect of those aspects of nuclear power plants committed to its regulatory authority and (2) by interpreting subsection (k) as being intended to acknowledge state authority *only* over areas *not* regulated at all by the NRC. Therein lies the central fallacy in the Court of Appeals' erroneous decision in this case.

D. The California Nuclear Statutes Are Void Because They Invade a Federally Preempted Regulatory Field and Conflict With Congress' Purposes Respecting Nuclear Power Plants.

1. Section 25524.2 of the Warren-Alquist Act Is Void.

California Public Resources Code § 25524.2 *prohibits* the construction and operation of a nuclear power plant in California until the State Energy Commission has found, *inter alia*, "that . . . there exists a demonstrated technology or means for the disposal of high-level nuclear waste." The Court of Appeals, characterizing this prohibition as a "moratorium," upheld the statute. The Court erred in doing so for the following reasons:

a. The Court of Appeals misread the statute, concluding that the State Energy Commission and California Legislature are required only to find that the federal government has approved a method of disposing of high-level waste. 659 F.2d at 925. In fact, Section 25524.2 goes much further, requiring the State Energy Commission and the California Legislature to make an *independent* determination whether a satisfactory technology or means for the disposal of high-level nuclear waste *exists in fact*.[15] That meaning is confirmed by a report issued by the California Assembly Committee on Resources, Land Use, and Energy and titled "Reassessment of Nuclear Energy in California: A Policy Analysis of Proposition 15 and Its Alternatives" (1976),

---

[15]Section 25524.2 provides in relevant part: "No nuclear fission thermal powerplant . . . shall be permitted land use in the state, or where applicable, be certified by the commission until both conditions (a) and (b) have been met: (a) The commission finds that there has been developed and that the United States through its authorized agency has approved *and there exists* a demonstrated technology or means for the disposal of high-level nuclear waste (b) The commission has reported its findings and the reasons therefor pursuant to paragraph (a) to the Legislature." (Emphasis added.)

which states: "the ability to dispose of (permanently store) high level radioactive wastes [is] required to be addressed and resolved by the federal government, *to the satisfaction of the State Energy Commission*, before any new nuclear plants can be certified." At 155 (emphasis added).

b. Ever since 1954 Congress has manifested and legislated a continuing federal policy of promoting the private development of nuclear power plants. Pursuant to this policy, the NRC has determined that construction and operation of nuclear power plants may be federally authorized even though a specific method of disposing of high-level nuclear waste has not yet been put in place.[16] Section 25524.2 prohibits such developmental activity by petitioners and other California utilities until both the State Energy Commission and the California Legislature have determined that a means of disposing of high-level waste *satisfactory to them* exists — thus stultifying federal law and policy.

c. The Court of Appeals erred in holding that Section 25524.2 was not enacted for the purpose of protection against radiation hazards but only for economic reasons. The Court relied upon the California Legislative Committee Report, *supra*, as the basis for this conclusion. Petitioners submit that an objective reading of that Report does not support the Court of Appeals' conclusion — to the contrary, the Report makes clear that California's 1976 nuclear statutes, including Section 25524.2, are designed to commit radiation safety issues to decision by the State Energy Commission and the California Legislature.

d. Even if Section 25524.2 had been enacted to achieve state purposes other than protection against radiation haz-

---

[16]*Natural Resources Defense Council, Inc. v. United States Nuclear Regulatory Commission*, 582 F.2d 166 (2d Cir. 1978), specifically upheld this NRC determination.

ards, the Court of Appeals erred because it ignored the teaching of *Perez v. Campbell, supra*, that an otherwise valid state purpose cannot save a state law that frustrates the operation of federal law.

2. Sections 25503, 25504 and 25516 Are Void.

California Public Resources Code §§ 25503, 25504 and 25516 require a utility to propose three alternative sites when applying to the State Energy Commission for certification of a nuclear power plant. The Commission may not approve an NOI unless (with some exceptions) it finds at least two of the proposed sites acceptable. In contrast, the NRC requires only that detailed seismological, geological and other information be submitted for *one* proposed site, together with a showing that no other clearly preferable site is available. Thus, California's three-site requirement, as applied to proposed nuclear power plants, clearly imposes substantial burdens upon an applicant to build a nuclear power plant which the federal government deems unnecessary. The California requirement also makes compliance by the utility with the two regulatory bodies an impossibility in any case where the federal and state regulators cannot agree on an acceptable site. The requirement, therefore, is invalid.

3. The Provisions of the Warren-Alquist Act Invalidated by the District Court but Not Reviewed on the Merits of the Preemption Issue by the Court of Appeals Are Void.

California's certification system statutes (California Public Resources Code §§ 25500, 25502, 25504, 25511, 25512, 25514, 25516, 25517, 25519, 25520, 25523 and 25532) prohibit construction and operation of a nuclear power plant unless and until authorized by the State Energy Commission. As we have shown (at 4, *supra*), such authorization may be granted only after detailed inquiry by

the Commission into — and imposition of requirements concerning — a host of matters regulated by the NRC, including but not limited to the geology and seismology of the proposed sites and the design of the plant and its proposed safety systems. In addition, California Public Resources Code § 25528 requires the State Energy Commission to deny certification (approval) of a nuclear power plant unless population densities around the plant meet the Commission's requirements and California Public Resources Code § 25524.1(b) requires the Commission to deny certification unless it is satisfied with the method of on-site storage of spent nuclear fuel, a matter regulated by the NRC as part of the "construction and operation" referred to in 42 U.S.C. § 2021(c); see also 10 C.F.R. § 150.15(a)(1). These 14 statutes conflict with and frustrate the purposes of the 1954 Act because their combined effect is to make the State Energy Commission a "little NRC" authorized and required to make independent determinations whether nuclear power plants meet *California* standards and requirements pertaining to matters that fall within the jurisdiction of the NRC.[17]

The certification system statutes and the other provisions of the Warren-Alquist Act invalidated by the District Court also are void among other reasons because — contrary to the decision of the Court of Appeals — they reflect a state intention to regulate the construction and operation of nu-

---

[17]While petitioners assert the State Energy Commission cannot regulate what the NRC regulates, this does not mean the Commission, and California, have no say in the process leading to NRC regulatory decisions. NRC regulations allow the State Energy Commission to intervene in any NRC proceeding, 10 C.F.R. § 2.714, and allow the states to present their views and concerns on any issue being considered, 10 C.F.R. § 2.715(c). The Warren-Alquist Act specifically authorizes the State Energy Commission to present California's views in any federal proceeding, including those of the NRC. California Public Resources Code §§ 25217(c), 25219 and 25220.

clear power plants for the purpose of providing protection against radiation hazards. This intention is reflected in the way the State Energy Commission has interpreted and administered the Act.

A striking and immediately relevant illustration of the Commission's perception of the Act and its powers thereunder is found in the Commission's summary rejection of PGandE's NOI for its Stanislaus nuclear power plant project on the alleged ground the NOI was inadequate.[18] The State Energy Commission's action was reflected in its letter to PGandE rejecting the NOI (reprinted as Appendix 9) and a Data Adequacy Report prepared by the Commission discussing the alleged inadequacies of the NOI (reprinted as Appendix 10). These documents — ignored by the Court of Appeals — show that the Commission interprets the Warren-Alquist Act, and especially Section 25511, as giving it the power to regulate *all* aspects of nuclear power plant construction and operation, *including regulation in respect of radiation safety*. The rejection letter stated that "Section 25511 of the [Warren-Alquist] Act reveals a clear legislative intent that safety and reliability be subject to a degree of [state] scrutiny not generally required for other matters considered in an NOI" and concluded that "the document [*i.e.*, the NOI] does not contain information relating to these areas in sufficient detail to allow the Staff to perform the level of analysis clearly mandated by the

---

[18]PGandE in the early 1970's determined to construct a new two-unit nuclear power plant known as the Stanislaus project, which was to begin operation in the late 1980's. PGandE expended at least $10,000,000 on the Stanislaus project as of August 30, 1977. On that date, PGandE filed an NOI for the Stanislaus project with the State Energy Commission, which was summarily rejected on September 29, 1977 on the ground that the NOI was required to contain much additional information, including a substantial amount of data concerning and relating to the radiological safety of the Stanislaus project.

Warren-Alquist Act." (Appendix 9, at 223-224.) The letter summarized specific areas of safety and reliability in which the NOI was deficient, with particular reference to "Radiological Health Effects."

The Data Adequacy Report which followed required PGandE to provide extensive information covering such federally regulated and preempted areas of nuclear power plant design, construction and operation (among others) as: radiation emissions, (Appendix 10, at 247; *compare Northern States*); fuel storage and handling (Appendix 10, at 247); "radiological health effects" (Appendix 10, at 249); "reliability" factors and comparisons (Appendix 10, at 253-255; *compare* 10 C.F.R. §§ 50.34, 50.36); analysis of the emergency core cooling system, containment, pressure vessel integrity, and leakage control between systems containing radioactive materials (Appendix 10, at 255-256; *compare* 10 C.F.R. §§ 50.34, 50.36; 10 C.F.R. Part 50, Appendices G, H, J, K).[19]

In light of this action of the State Energy Commission in respect of the Stanislaus NOI, there can be no serious doubt that the Commission fully intends, acting in effect as a "little NRC," *to impose detailed, independent California regulation of radiological safety aspects of nuclear power plants*, despite the fact that the subject matter has been preempted by Congress for exclusive federal regula-

---

[19]In the area of "radiological health effects," the Data Adequacy Report required PGandE to provide detailed information for State Energy Commission analysis and decision making as follows: "For each proposed site, an evaluation of the particular environmental pathways that might act to concentrate radioactive plant emissions or result in radiation exposure to the public. . . . Estimates of the radiation dose to the public and workers from one year of operation of one unit of the proposed plant at each site. . . . Indication of the method of analysis, the environmental pathways considered and the dose commitment period utilized for the above estimates including the sensitivity to this parameter." (Appendix 10, at 250.)

tion. On this record, it cannot rationally be contended that the Warren-Alquist Act was enacted solely for purposes *other than* regulation of radiation hazards.

In holding the validity of the 1975 statutes not ripe for review, the Court of Appeals clearly subverted the Congressional goal of promoting nuclear energy by entrusting the NRC with exclusive responsibility for determining where and how nuclear power plants may be constructed and operated and protecting the public health and safety in connection therewith.

E. All of the Preemption Claims Asserted by Petitioners Are Ripe for Review.

In holding that the certification system statutes (California Public Resources Code §§ 25500, 25502, 25504, 25511, 25512, 25514, 25516, 25517, 25519, 25520, 25523 and 25532), the acquisition of development rights statute (§ 25528), and § 25524.1(b) are not ripe for review, the Court of Appeals failed to apply the same analysis which it applied in determining that PGandE and Edison have standing to bring this action *and* that the constitutionality of California Public Resources Code §§ 25503, 25504, 25516 and 25524.2 is ripe for review. The appellate court summarized the District Court's findings on standing as follows: (1) "both PG&E and SCE [Edison] had decided to include nuclear plants among their power generating facilities in the 1990's;" (2) "PG&E had planned to build a nuclear power plant known as Stanislaus, for which it filed a notice of intention with the Energy Commission;" (3) "SCE [Edison] had planned to participate in the building of two nuclear power plants known as Nuclear 1 and Nuclear 2;" (4) "both PG&E and SCE [Edison] had cancelled their plans in the belief that, as a practical matter, the challenged statutory provisions made it impossible for them to pro-

ceed;" and (5) "PG&E and SCE [Edison] would reinstate their plans to build nuclear plants if the challenged statutes were invalidated." 659 F.2d at 914. The Court of Appeals upheld *all* of these findings and concluded that petitioners had standing to challenge the California nuclear statutes "[b]ecause the challenged statutes stand as an absolute barrier to construction of the proposed plants, and because that barrier will be removed if the utilities secure the injunctive [*sic*] relief they seek . . . ." 659 F.2d at 915.

The Court thereafter held that the validity of Section 25524.2 was ripe for review, stating:

> . . . Postponement could, moreover, work substantial hardship on the utilities. On the one hand, they could proceed with their plans in the hopes that, when the time for certification came, either the required findings would be made or the law would be struck down. This would require massive expenditures over a number of years, expenditures that quite possibly could not be recovered unless the plant were eventually certified. Alternatively, the utilities could abandon their plans to use nuclear power, with the result that no challenge to section 25524.2 would ever be ripe.

659 F.2d at 918.

The considerations set forth in the foregoing portions of the Court of Appeals' opinion apply as fully to the statutes held not ripe for review as they do to Sections 25503, 25504, 25516 and 25524.2. As the District Court found, the very existence of the California certification system statutes precludes the construction of nuclear power plants in California as a practical matter. *Affirming* that finding, the Court of Appeals agreed that the challenged statutes stand as an absolute barrier to construction of the proposed plants which will be removed if the statutes are invalidated. 659 F.2d at 915. Given this determination, the Court of Appeals' refusal

to review the other statutes places the petitioners in the very same quandary which the Court held refusal to review Section 25524.2 would have created: No challenge to the certification system and other statutes will ever be ripe because petitioners cannot, as a practical matter, embark upon State Energy Commission certification proceedings requiring massive expenditures that might not be recovered if certification were denied.

The Court of Appeals rationalized its refusal to review the California certification system statutes on the ground that their review should await the specific application of those statutes in a State Energy Commission certification proceeding. In so ruling, the Court of Appeals said that "a delay in adjudication will not cause undue hardship for the parties," 659 F.2d at 916; that "the threat that procedural burdens might someday be imposed or that certification might someday be denied for failure to meet Energy Commission standards is remote at best," *id.*; and that "[t]he utilities cannot establish a justiciable controversy by simply asserting that the risk of future harm causes them a present injury." *Id.*

These statements are *totally inconsistent* with the other portions of the Court of Appeals' opinion dealing with standing and ripeness, quoted above, which accurately describe the setting of this action. As the Court of Appeals there acknowledged, PGandE and Edison are now suffering a *present* harm because the *very existence* of the California certification system and other statutes stands as an *absolute barrier* to construction of plants they desire to build. The harm to PGandE and Edison that creates both standing and ripeness is not the risk of future State Energy Commission denial of certification; *it is that the very existence of the challenged statutes is now preventing and will continue to prevent PGandE and Edison from planning and building*

nuclear power plants in California. Because this is true, the constitutionality of the certification system statute and the other statutes challenged by petitioners is clearly ripe for adjudication.[20]

CONCLUSION.

For all of the foregoing reasons, petitioners PGandE and Edison urge the Court to grant this petition in order to decide the nationally important issues this case presents for decision.

Respectfully submitted,

JOHN R. MCDONOUGH,
HOWARD B. SOLOWAY,
Counsel of Record,
BALL, HUNT, HART, BROWN
AND BAERWITZ,
Attorneys for Petitioners.

---

[20]Furthermore, *future* application of the certification system statutes would be inevitable because these provisions are part of the regime the State Energy Commission is required to follow in considering certification of nuclear power plants.

Appendix

Supreme Court, U.S.
FILED
APR 20 1982
ALEXANDER L. STEVAS
CLERK

81-1945

No. ..-....

IN THE

Supreme Court of the United States

October Term, 1981

PACIFIC GAS AND ELECTRIC COMPANY and SOUTHERN CALIFORNIA EDISON COMPANY,

Petitioners,

vs.

STATE ENERGY RESOURCES CONSERVATION AND DEVELOPMENT COMMISSION, *et al.*,

Respondents.

APPENDIX TO PETITION FOR WRIT OF CERTIORARI.

JOHN R. McDONOUGH,
HOWARD B. SOLOWAY,
Counsel of Record.
BALL, HUNT, HART, BROWN AND BAERWITZ,
450 North Roxbury Drive,
Beverly Hills, Calif. 90210,
(213) 278-1960,
Attorneys for Petitioners.

Parker & Son, Inc., Law Printers, Los Angeles. Phone 724-6622

APPENDIX

Page

Appendix 1 — Opinion of the United States Court of Appeals for the Ninth Circuit in *Pacific Legal Foundation, et al. v. State Energy Resources Conservation and Development Commission, et al.*, Nos. 79-3365, 79-3382, 80-4265, 80-4273, filed October 7, 1981. ..... App. p. 1

Appendix 2 — Order of the United States Court of Appeals for the Ninth Circuit in *Pacific Legal Foundation, et al. v. State Energy Resources Conservation and Development Commission, et al.*, Nos. 79-3365, 79-3382, 80-4265, 80-4273, Denying the Petition for Rehearing, filed January 20, 1982. 53

Appendix 3 — Opinion of the United States District Court, Eastern District of California in *Pacific Gas and Electric Company, et al. v. State Energy Resources Conservation and Development Commission, et al.*, No. CV S-78-527-R, filed April 25, 1980. 55

Appendix 4 — Findings of Fact and Conclusions of Law of the United States District Court, Eastern District of California in *Pacific Gas and Electric Company, et al. v. State Energy Resources Conservation and Development Commission, et al.*, No. CV S-78-527-R, filed April 25, 1980 65

Appendix 5 — Judgment of the United States District Court, Eastern District of California in *Pacific Gas and Electric Company, et al. v. State Energy Resources Conservation and Development Commission, et al.*, No. CV S-78-527-R, filed April 25, 1980 83

Appendix 6 — Pertinent Provisions of the Atomic Energy Act of 1954, as Amended, 42 U.S.C. §§ 2011-2296 87

Page

§ 2011 87
§ 2012 87
§ 2013 88
§ 2014(cc) 89
§ 2018 90
§ 2021 90
§ 2039 100
§ 2131 100
§ 2132 102
§ 2133 102
§ 2201(b) & (p) 103
§ 2232 104
§ 2235 106
§ 2236 107
§ 2239 108
§ 2241 109
Appendix 7 — Pertinent Provisions of Title 10 of the Code of Federal Regulations 111
§ 2.101 111
§ 2.104 120
§ 8.4 126
§ 50.10 131
§ 50.23 136
§ 50.30 137
§ 50.34 141
§ 50.35 148
§ 50.36 150
§ 50.50 154
§ 50.55 154
§ 50.56 157

Page

§ 50.57 157
§ 50.58 159
§ 50.70 160
§ 50.100 161
Part 50, Appendices B and E 162
§ 100.1 186
§ 100.2 186
§ 100.3 187
§ 100.10 188
§ 100.11 190
§ 150.15(a)(1) 192
Appendix 8 — Pertinent Provisions of the Warren-Alquist State Energy Resources Conservation and Development Act, California Public Resources Code §§ 25000-25986 193
§ 25000 193
§ 25104 193
§ 25105 193
§ 25110 193
§ 25119 194
§ 25120 194
§ 25200 194
§ 25220 194
§ 25500 194
§ 25502 194
§ 25503 196
§ 25504 196
§ 25511 196
§ 25512 196
§ 25513 198

Page

§ 25514 198
§ 25516 199
§ 25517 200
§ 25519 201
§ 25520 204
§ 25522 205
§ 25523 205
§ 25524.1 207
§ 25524.2 210
§ 25524.25 212
§ 25524.3 214
§ 25525 217
§ 25528 217
§ 25532 218

Appendix 9 — September 29, 1977 Letter From Energy Resources Conservation and Development Commission to Pacific Gas and Electric Company Returning Notice of Intention for Stanislaus Nuclear Project. (Exhibit X admitted into evidence at trial.) 221

Appendix 10 — Staff Report on Data Adequacy for the Pacific Gas and Electric Company, Stanislaus Nuclear Project, Notice of Intention (NOI), November-1977, California Energy Resources Conservation and Development Commission. (Exhibit Y admitted into evidence at trial.) 241

APPENDIX 1.

Opinion of the Court of Appeals.

United States Court of Appeals for the Ninth Circuit.

Pacific Legal Foundation, a California Nonprofit Corporation, et al., Plaintiffs-Appellees, v. State Energy Resources Conservation & Development Commission, a state agency, et al., Defendants-Appellants. Natural Resources Defense Council, Inc., et al., Defendants-Intervenors-Appellants. Nos. 78-711 WBE.

Pacific Gas and Electric Co. and Southern California Edison Co., Plaintiffs-Appellees, v. State Energy Resources Conservation & Development Commission, a state agency, et al., Defendants-Appellants. Natural Resources Defense Council, Inc., et al., Defendants-Intervenors-Appellants. Nos. 80-4265, 80-4273 DC No. CV 78-527 MLR.

OPINION

Filed: October 7, 1981.

Appeal from the United States District Court for the Southern District of California, William B. Enright, District Judge, Presiding.

Appeal from the United States District Court for the Eastern District of California, Manuel L. Real, District Judge, Presiding.

Argued and submitted: October 9, 1980.

BEFORE: FLETCHER and FERGUSON, Circuit Judges, and FITZGERALD,* District Judge.

FLETCHER, Circuit Judge:

These are consolidated appeals from two district court decisions invalidating portions of California's Warren-Alquist Act. The Warren-Alquist Act regulates all electric

---

*The Honorable James M. Fitzgerald, United States District Judge for the District of Alaska, sitting by designation.

plants in California and imposes a moratorium on the construction of new nuclear plants. The courts below held that insofar as the challenged provisions regulate nuclear plants, they are preempted by the federal Atomic Energy Act, 42 U.S.C. §§ 2011-2296 (1976 & Supp. III 1979).

We find that on the records before us, only two of the challenged provisions are ripe for review: the moratorium provision and the requirement that utilities submit three alternate sites for their proposed plants. On the merits, we hold that the Atomic Energy Act does not preempt state laws enacted for purposes other than protection against radiation hazards. Because the moratorium provision and the three-site requirement were enacted for purposes other than protection against radiation hazards, we conclude that they are not preempted.

I
BACKGROUND

A. The Warren-Alquist Act and the Nuclear Laws

The Warren-Alquist State Energy Resources Conservation and Development Act, Cal. Pub. Res. Code §§ 25000-25986 (West 1977 & Supp. 1980), commonly known as the Warren-Alquist Act, was enacted by California in 1974. According to the legislative findings and policies set forth in the Act, it was adopted in furtherance of the state's responsibility as perceived by the legislature to ensure a reliable source of electrical energy, and to that end to require coordination of energy research and regulation at the state level. *Id.* §§ 25001-25007.

In keeping with this objective, the legislature established a five-member State Energy Resources Conservation and Development Commission (the Energy Commission) to carry out the necessary research and regulation. *Id.* § 25200. The Energy Commission, defendant-appellant in these

cases,[1] has broad authority over energy planning and forecasting, conservation, resource management, research and development, and the regulation of power plants. The present actions challenge a number of the Warren-Alquist Act's provision authorizing the Energy Commission to regulate the construction and operation of new nuclear power plants.

California's system of regulating power plants is similar to that employed by a number of other states.[2] In brief, the construction or modification of any power plant, nuclear or non-nuclear, is conditioned upon the Energy Commission's approval, or "certification," of both the site and the proposed plant. *Id.* § 25500. To obtain certification, utilities must follow a two-step procedure.

First, any utility planning to construct a power plant must at an early stage submit a "notice of intention" containing information regarding the need for the power plant, the proposed design, the location of alternate sites, and the relative merits of the different sites. *Id.* §§ 25502, 25504. During this phase of the certification process, the focus is on determining site suitability and general conformance of the proposed plant with long-term energy needs, and health, safety and environmental standards. Each notice of intention must contain at least three alternate sites, only two of which

---

[1]The individual members of the Energy Commission are also defendants-Appellants in these cases, as are four environmental groups that intervened below: the Natural Resources Defense Council, the Environmental Defense Fund, the Sierra Club, and Californians for Nuclear Safeguards. The Energy Commission, its individual members, and the environmental groups will collectively be referred to as "the Energy Commission."

[2]Twenty-three states filed *amicus* briefs and statements of interest comparing their regulatory schemes to that of California.

may be near the coast. *Id.* § 25503.[3] The Energy Commission reviews the information submitted by the applicant, consults with other agencies, holds hearings, and makes a variety of findings based on its analysis of the data it has gathered. *Id.* §§ 25505-25516.5.[4] The notice of intention may be approved only if the Energy Commission finds that at least two of the proposed sites are acceptable, or that one site is acceptable and a good-faith effort to find an alternate has been made. *Id.* § 25516.

Before beginning the actual construction of a power plant, a utility must apply to the Energy Commission for certification. *Id.* § 25517. The application must contain detailed information about the plant,[5] and the Energy Commission

---

[3]Section 25503 provides that:

> Each notice of intention to file an application shall contain at least three alternative sites and related facilities, at least one of which shall not be located in whole or in part in the coastal zone. In addition, the alternative sites and related electrical facilities may be proposed from an inventory of sites which have previously been approved by the commission in a notice of intent or may be proposed from sites previously examined.

This section implements the concept of "site banking": if more than one of the proposed sites is found to be acceptable, the unused sites are to be "banked" by the Energy Commission and made available to other utilities wishing to build power plants. The "site banking" concept is apparently unique to California.

[4]The Energy Commission is required to issue findings with respect to the proposed power plant's conformity with projected power needs and applicable land use laws, *id.* § 25514(a), and with respect to the plant's safety and reliability, taking into account proposed emergency systems, safety precautions, plans for handling fuels, features to account for seismic hazards, and methods of controlling population density in areas surrounding power plants, *id.* §§ 25511, 25514(e). The Energy Commission may also specify modifications to the power plant's design, construction, or location. *Id.* § 25514(e).

[5]The application is to contain a description of the proposed power plant's design, construction, and operation; safety and reliability information; detailed information about the site; a specification of the fuel to be used; projections of the fuel costs and generating costs; the location of proposed power lines; and any other information the Energy Commission may require. *Id.* § 25520.

is again directed to review the information and hold hearings. *Id.* §§ 25519-25521. An environmental impact statement is prepared. Local agencies are asked to comment on such matters as the design of the proposed power plant, architectural and aesthetic features, access to roads, and public use of land surrounding the proposed plant. The California Public Utilities Commission is asked to make recommendations regarding the rate structure and economic reliability of the proposed plant, and comments are solicited from other agencies and the public. *Id.* § 25519. The Energy Commission then issues a written decision containing findings similar to those required at the notice-of-intention stage,[6] including specification as to how the plant is to be designed and operated in order to protect health, safety, and environmental quality. *Id.* § 25523. As a condition of certification, the Energy Commission may require the utility to obtain development rights to property surrounding the plant so as to maintain population densities at a safe level. *Id.* § 25528. The Energy Commission is also directed to monitor certified plants once they become operational. *Id.* § 25532.

For the most part, this regulatory scheme applies to power plants of all types.[7] In 1976, however, the California legislature added several provisions to the Warren-Alquist Act that are applicable only to nuclear plants. *Id.* §§ 25524.1,

---

[6]The findings must address the proposed power plant's compliance with land use, health, safety, environmental, and other standards established by the Energy Commission; compliance with applicable laws; efficiency of operation; and conformity with projected power needs. *Id.* §§ 25216.3, 25402(d), 25523.

[7]Two of the sections discussed above contain provisions which apply specifically to nuclear plants. Section 25511 requires the submission of information on methods of preventing the diversion of nuclear fuels, and section 25528 provides that the safe level of population density surrounding nuclear plants will generally be that established by the Nuclear Regulatory Commission.

25524.2, 25524.3. These provisions, known as the Nuclear Laws, impose a moratorium on the certification of any new nuclear plants until the Energy Commission makes certain findings and submits them to the California legislature for approval. Section 25524.1(a) prohibits the certification of nuclear plants requiring fuel reprocessing until the Energy Commission finds that a federally approved method of fuel reprocessing exists; section 25524.2 prohibits the certification of all types of nuclear plants until the Energy Commission finds that a federally approved method of disposing of nuclear wastes exists; and section 25524.3 prohibits the certification of all types of nuclear plants until the Energy Commission has completed and submitted to the legislature a study on the feasibility of undergrounding and berm containment.[8] The Nuclear Laws also require the Engergy Commission to determine, on a case-by case basis, whether facilities are available to store a proposed nuclear plant's spent fuel rods. *Id.* § 25524.1(b). The Nuclear Laws direct the Energy Commission to continue processing notices of intention and applications for certification of new nuclear plants, but until the requisite findings are made the plants cannot be certified and construction cannot begin. *Id.* §§ 25524.1(c), 25524.2(d), 25524.3(c); *see id.* §§ 25500, 25517.

B. The PLF Case

The first of the two cases before us, *Pacific Legal Foundation v. State Energy Resources Conservation & Development Commission (PLF)*, involves only one provision of

---

[8]Berm containment is a method of "placing [a nuclear] reactor in a scooped out hole and backfilling with dirt . . . to increase the margin of safety in the event of an accident which breaches the containment building." California Assembly Committee on Resources, Land Use, and Energy, *Reassessment of Nuclear Energy in California: A Policy Analysis of Proposition 15 and Its Alternatives* 155 (1976).

the Warren-Alquist Act: section 25524.2, imposing a moratorium on new nuclear plants until the Energy Commission finds that a method of waste disposal exists.[9] The suit was originally brought by a number of plaintiffs, who challenged all three Nuclear Laws.[10] The court below granted summary

---

[9]Section 25524.2 provides in relevant part:

> No nuclear fission thermal powerplant, including any to which the provisions of this chapter do not otherwise apply, but excepting those exempted herein, shall be permitted land use in the state, or where applicable, be certified by the commission until both conditions (a) and (b) have been met:
>
> (a) The commission finds that there has been developed and that the United States through its authorized agency has approved and there exists a demonstrated technology or means for the disposal of high-level nuclear waste.
>
> (b) The commission has reported its findings and the reasons therefor pursuant to paragraph (a) to the Legislature. . . .
>
> . . . .
>
> (c) As used in this section, "technology or means for the disposal of high-level nuclear waste" means a method for the permanent and terminal disposition of high-level nuclear waste. It shall not necessarily require that facilities for the application of such technology and/or means be available at the time the commission makes its findings. Such disposition shall not necessarily preclude the possibility of an approved process for retrieval of such waste.
>
> (d) The commission shall continue to receive and process notices of intention and applications for certification pursuant to this division but shall not issue a decision pursuant to Section 25523 granting a certificate until the requirements of this section have been met. All other permits, licenses, approvals or authorizations for the entry or use of the land, including orders of court, which may be required may be processed and granted by the governmental entity concerned but construction work to install permanent equipment or structures shall not commence until the requirements of this section have been met.
>
> (e) Any nuclear fission powerplant is exempted from the provisions of this section if prior to the date on which this section is chaptered an electric utility has performed substantial construction on such powerplant and has incurred substantial expense for construction and for necessary materials for such powerplant, including, but not limited to, the following sites and facilities
>
> . . . .

[10]The plaintiffs were Robert Thornberry, an individual; the Pacific Legal Foundation and the San Diego Coalition, nonprofit corporations; the San Diego Section of the American Nuclear Society; and the San Diego County Building and Construction Trades Council.

judgment for plaintiff Robert Thornberry, but denied the summary judgment motions of the other plaintiffs on the ground that they had failed to show particularized injuries sufficient to give them standing.[11]

Thornberry, a nuclear engineer, was hired by San Diego Gas & Electric Co. (SDG&E) to work on a proposed nuclear plant known as Sundesert. The Sundesert project was abandoned on May 3, 1978 by resolution of SDG&E's board of directors, and Thornberry lost his job. According to the SDG&E board resolution, the Sundesert project was abandoned both because SDG&E had failed to obtain an exemption from the Nuclear Laws, and because the California Public Utilities Commission had denied SDG&E's application for a rate increase.

Ruling on Thornberry's motion for summary judgment, the court below held that there was sufficient causal connection between the Nuclear Laws and Thornberry's losing his job to provide Thornberry with standing. The court found Thornberry's challenge to sections 25524.1 and 25524.3 to be moot, but declared section 25524.2 to be preempted by the Atomic Energy Act of 1954, 42 U.S.C. §§ 2011-2296 (1976 & Supp. III 1979). The court certified its judgment pursuant to Fed. R. Civ. P. 54(b), and the Energy Commission brought this interlocutory appeal.

C. The PG&E Case

The second of these cases, *Pacific Gas & Electric Co. v. State Energy Resources Conservation & Development Commission (PG&E)*, presents a much broader challenge

---

[11]These plaintiffs cross-appealed from the court's denial of their summary judgment motions. We dismissed the cross-appeal on the ground that it was not taken from a final judgment. *Pacific Legal Foundation v. State Energy Resources Conserv. & Dev. Comm'n*, No. 79-3424 (9th Cir. Nov. 1, 1979) (unpublished order).

to California's regulatory scheme. The plaintiffs, Pacific Gas & Electric Co. (PG&E) and Southern California Edison Co. (SCE), both claimed that uncertainties caused by the Nuclear Laws and the Warren-Alquist Act had caused them to cancel plans to build nuclear plants. PG&E had cancelled a specific project known as Stanislaus, while SCE had abandoned general plans to build two nuclear plants at some future time.

As in the *PLF* case, PG&E and SCE (the utilities) moved for summary judgment. The court below found that summary judgment could not be granted on the issue of standing, since disputed factual issues remained to be resolved. Accordingly, the court held a trial to determine whether the utilities had standing. The court rejected the Energy Commission's argument that economic considerations had kept the utilities from building their proposed nuclear plants, and held that the utilities would have proceeded with their plans but for the Nuclear Laws and other provisions of the Warren-Alquist Act. The court thus concluded that the utilities had standing to sue.

Pursuant to Fed. R. Civ. P. 56(d), the court then granted summary judgment for the utilities on the merits of their claim. The court invalidated the Nuclear Laws in their entirety, invalidated the three-site requirement and the provisions regarding the acquisition of development rights, Cal. Pub. Res. Code §§ 25503, 25504, 25516, 25528, insofar as they applied to nuclear plants, and invalidated numerous other provisions of the Warren-Alquist Act[12] insofar as they touched upon matters which the court viewed as being within the authority of the Nuclear Regulatory Commission (NRC).

---

[12]The invalidated provisions were Cal. Pub. Res. Code §§ 25500, 25502, 25504, 25511, 25512, 25514, 25516, 25517, 25519, 25520, 25523, 25532.

As in *PLF*, the court held the challenged provisions to be preempted by the Atomic Energy Act.

II
STANDING

Before reaching the merits of these cases, we must decide whether any of the plaintiffs have standing to bring suit.

Standing is a constitutional doctrine, derived from article III's requirement that federal courts decide only actual cases or controversies. *Simon v. Eastern Kentucky Welfare Rights Organization*, 426 U.S. 26, 37-38 (1976). It limits our jurisdiction to cases in which the plaintiff alleges that he has suffered a particularized injury, although admittedly the injury may be slight. *United States v. Students Challenging Regulatory Agency Procedures (SCRAP)*, 412 U.S. 669, 689 n.14 (1973). In addition, the standing doctrine requires that the plaintiff demonstrate both "a 'fairly traceable' causal connection between the claimed injury and the challenged conduct," *Duke Power Co. v. Carolina Environmental Study Group, Inc.*, 438 U.S. 59, 72 (1978) (citations omitted), and "a 'substantial likelihood' that the relief requested will redress the injury claimed," *id.* at 75 n.20. *See Gladstone, Realtors v. Village of Bellwood*, 441 U.S. 91, 100 (1979); *Village of Arlington Heights v. Metropolitan Housing Development Corp.*, 429 U.S. 252, 264 (1977).

It is undisputed that the appellees in both of the cases before us have alleged particularized injuries to themselves. Our concern thus is with causation and the court's capacity to redress the injuries alleged.

A. Thornberry

In the *PLF* case, the court below granted summary judgment for Thornberry on the standing issue. Thornberry's claim of standing rests on two premises: that the moratorium imposed by Cal. Pub. Res. Code § 25524.2 caused SDG&E to cancel the Sundesert project, and that cancellation of the Sundesert project caused Thornberry to lose his job. The Energy Commission disputes both of these premises, and further contends that Thornberry has not demonstrated either that the Sundesert project would be reinstituted or that he would be rehired if section 25524.2 were invalidated.

We may affirm a grant of summary judgment only if the material facts are undisputed and the moving party is entitled to judgment as a matter of law. Fed. R. Civ. P. 56(c). We must view all evidence and factual inferences in the light most favorable to the non-moving party, the Energy Commission. *Heininger v. City of Phoenix*, 625 F.2d 842, 843 (9th Cir. 1980).

1. Cancellation of Sundesert

The Energy Commission contends that economic considerations caused SDG&E to cancel Sundesert, and that these economic considerations would keep Sundesert from being built even if section 25524.2 were invalidated. In support of this contention, the Energy Commission points to the SDG&E board of directors' resolution terminating Sundesert. Among the reasons for the termination, the resolution lists a California Public Utilities Commission (CPUC) decision issued he previous day which stated "that continued

expenditures on Sundesert would, with certain exceptions, be entirely at the risk of [SDG&E's] shareholders."[13]

This CPUC decision, *Investigation on the Commission's Own Motion (San Diego Gas & Electric Company)*, No. 88758, Interim Op., OII No. 4 (CPUC May 2, 1978), and a prior resolution adopted by the CPUC, Resolution No. L-190 (CPUC July 6, 1977), made clear that the CPUC would not grant SDG&E certain types of rate relief to assist it in financing the Sundesert project.[14] The Energy Commission

---

[13]The SDG&E board resolution, dated May 3, 1978, read in relevant part:

> WHEREAS, at its meeting on January 27, 1978, this Board resolved not to terminate the Sundesert Project before May 1, 1978 in order to give the legislature and governor time to exempt Sundesert from Sections 25524.1 and 25524.2 of the California Public Resources Code; and
>
> WHEREAS, the officers and this Board have continuously monitored events occurring since January 27, 1978; and
>
> WHEREAS, Sundesert cannot be timely certified by the California Energy Resources Conservation and Development Commission without such an exemption, which, while diligently sought by the Company, has not yet been obtained and does not appear to be readily obtainable; and
>
> WHEREAS, in Decision No. 88758, dated May 2, 1978, the California Public Utilities Commission advised the Company that continued expenditures on Sundesert would, with certain exceptions, be entirely at the risk of the Company's shareholders.
>
> RESOLVED, that the officers of the Company are directed to take all appropriate steps to:
>
> 1. Immediately stop any further Sundesert expenditures, other than those associated with the actions described below and those required by law.
>
> . . . .

[14]SDG&E intended to finance Sundesert by issuing new securities. Due to restrictions contained in existing bonds, however, new securities could be issued only if SDG&E's earnings could be maintained at a certain level. To maintain such earnings, SDG&E requested two types of rate relief: (1) an increase in its authorized rate of return on equity, and (2) the inclusion of the costs of "construction work in progress" (CWIP) in its rate base.

Affidavits sumitted by the Energy Commission show that the CPUC has never granted any utility a rate of return on equity higher than 13.49% and has never allowed the inclusion of CWIP in a utility's rate

submitted affidavits from a number of experts in the area of energy regulation and financing indicating that Sundesert could not be financed without the requested rate relief.[15] This evidence raised a material question of fact. A trier of fact could have concluded that economic considerations caused the cancellation of Sundesert, and that the elimination of section 25524.2 would not have altered SDG&E's decision. Summary judgment on the issue of standing was therefore improper.

---

base. SDG&E has itself estimated that it would need a 14.5% rate of return together with the inclusion of CWIP in order to finance Sundesert. Others estimated that the necessary rate without the inclusion of CWIP might be as high as 21%. In response to an SDG&E request for rate relief, the CPUC stated that the inclusion of CWIP was "completely foreign to [California's] historical ratemaking policy" and would be opposed by the CPUC "in the absence of exhaustive analyses of alternatives . . . [and] a showing of extraordinary need." Resolution No. L-190 (CPUC July 6, 1977).

The CPUC reaffirmed this policy in its opinion of May 2, 1978, finding that Sundesert was "infeasible under the Commission's adopted ratemaking practices." *Investigation on the Commission's Own Motion (San Diego Gas & Electric Company)*, No. 88758, Interim Op., OII No. 4 at 45 (CPUC May 2, 1978). The CPUC thus advised SDG&E "that continued expenditures on the Sundesert nuclear facility . . . can only be recaptured by the company [through inclusion in its rate base] if the Sundesert nuclear facility is ultimately operational." *Id.* at 48. The CPUC recommended that alternate means of producing energy be considered.

[15]Affidavits were submitted by, *inter alia*, Richard L. Maullin, chairman of the Energy Commission and its presiding officer during consideration of the Sundesert notice of intention; Robert Logan, the Energy Commission economist in charge of studying utilities' financing capabilities; and Raymond J. Czahar, the CPUC financial examiner assigned to review SDG&E's proposal for financing Sundesert. The affidavits described SDG&E's financial position and stated that in the affiants' professional opinions, Sundesert could not be financed without a fundamental change in ratemaking policy. The affidavits also stated that in the affiants' opinions such a policy change was unlikely.

The court below disregarded these affidavits on the ground that they "state[d] only . . . declarants' opinions." *Pacific Legal Foundation v. State Energy Resources Conserv. & Dev. Comm'n*, 472 F. Supp. 191, 195 (S.D. Cal. 1979). Expert opinion testimony is admissible at trial, however, Fed. R. Evid. 702, 703, 704, and affidavits containing such testimony must be considered in ruling on a summary judgment motion. *See Bieghler v. Kleppe*, 633 F.2d 531, 533-34 (9th Cir. 1980).

In addition, the Energy Commission's evidence showed that SDG&E had asked the California legislature to exempt Sundesert from the requirements of section 25524.2, pursuant to the provisions of Cal. Pub. Res. Code § 25524.25. A bill granting such an exemption had passed the California Senate and was pending in the Assembly at the time SDG&E decided to abandon its Sundesert project.[16] A trier of fact could have inferred that if section 25524.2 were the primary obstacle facing the Sundesert project, SDG&E would have waited for more definitive adverse action by the California legislature before cancelling the project.

Thornberry contends that section 25524.2 provided an "independent reason" for the cancellation of Sundesert, because section 25524.2 would have forced SDG&E to cancel the project irrespective of any financial impediments. Even if this were true, it would not suffice to give Thornberry standing. The standing doctrine requires Thornberry to show "a 'substantial likelihood' that the relief requested will redress the injury claimed," *Duke Power Co. v. Carolina Environmental Study Group, Inc.*, 438 U.S. 59, 75

---

[16]Cal. Pub. Res. Code § 25524.25 directed the Energy Commission to notify the California legislature, no later than January 16, 1978, whether the findings required by sections 25524.1 and 25524.2 could be made at that time. The Energy Commission was then to recommend whether to exempt any nuclear plants for which notices of intention had been submitted prior to January 1, 1977. The Energy Commission recommended against exempting Sundesert. A Sundesert exemption bill, S.B. 1015, was nevertheless passed by the California Senate on January 26, 1978. The following day, the SDG&E board of directors resolved "to exert every reasonable effort to obtain an unconditional statutory exemption of Sundesert from the nuclear statutes" and "not [to] terminate the Sundesert Project before May 1, 1978, thereby providing time for the legislature and the governor to statutorily exempt Sundesert from the nuclear statutes."

On April 13, 1978, the California Assembly Committee on Resources, Land Use, and Energy voted against S.B. 1015. The record does not show whether this committee vote effectively killed the bill, or whether further proceedings were expected. The SDG&E board voted to terminate the Sundesert project on May 3, 1978.

n.20 (1977); *Legal Aid Society of Alameda County v. Brennan*, 608 F.2d 1319, 1333 (9th Cir. 1979).[17] Such a showing has not been made here. If the Sundesert project is not financially feasible, as the evidence submitted by the Energy Commission suggests, invalidation of section 25524.2 would not cause SDG&E to reinstate its Sundesert plans. On the record now before us, it is purely speculative whether the remedy Thornberry seeks would lead to the redress of his injury. Such "unadorned speculation will not suffice to invoke the federal judicial power." *Simon v. Eastern Kentucky Welfare Rights Organization*, 426 U.S. 26, 44 (1976).

2. Loss of Thornberry's job

Even if Thornberry could show that the invalidation of section 25524.2 would lead to the Sundesert project being revived, he would not necessarily have standing to bring this suit. He would also have to show that abandonment of the Sundesert project caused him to lose his job, and that revival of the project might result in his being rehired. We agree with the Energy Commission that Thornberry has not made a showing sufficient to support the trial court's grant of summary judgment in his favor. Although Thornberry's affidavit states that the cancellation of Sundesert caused him

---

[17]Thornberry argues that causation and redress are simply alternate ways of expressing the same idea. In Thornberry's view, no separate showing of redressability is necessary if it can be shown that the challenged statute caused his injury. We disagree. At least in cases such as Thornberry's, where the claimed injury results from the independent action of a third party not before the court, *see Davis v. United States Dep't of Hous. & Urban Dev.*, 627 F.2d 942, 944-45 (9th Cir. 1980), both this court and the Supreme Court have consistently required plaintiffs to show that their injuries would be redressable by the court's action. *E.g., Duke Power Co. v. Carolina Envir. Study Group, Inc.*, 438 U.S. 59, 75-77 (1978); *Village of Arlington Heights v. Metropolitan Hous. Dev. Corp.*, 429 U.S. 252, 264 (1977); *Simon v. Eastern Ky. Welfare Rights Org.*, 426 U.S. 26, 40-44 (1976); *Boating Indus. Ass'ns v. Marshall*, 601 F.2d 1376, 1380 (9th Cir. 1979); *Bowker v. Morton*, 541 F.2d 1347, 1349-50 (9th Cir. 1976).

to lose his job,[18] he has not even alleged, much less proved, that he might get his job back if the Sundesert project were revived. Only SDG&E could restore Thornberry to his job, and SDG&E is not a party to this action. Because "the solution to [Thornberry's] problem depends on decisions and actions by third parties who are not before the court and who could not properly be the subject of a decree directing the result sought," *Bowker v. Morton*, 541 F.2d 1347, 1350 (9th Cir. 1976), Thornberry has not shown standing to sue.

We do not hold that a plaintiff who suffers an indirect injury of this sort will never have standing to challenge government action that has arguably caused the injury. If SDG&E officials had promised Thornberry his job back were the Sundesert project revived, a trier of fact might conclude that Thornberry had shown a substantial likelihood of redress. *See, e.g., Duke Power*, 438 U.S. at 76-77 (plans of power plant officials sufficient to give surrounding citizens standing); *Village of Arlington Heights v. Metropolitan Housing Development Corp.*, 429 U.S. 252, 264 (1977) (plans of specific developer sufficient to give prospective resident standing). On the record before us, however, it is a mere speculative possibility that the relief sought would remedy Thornberry's injury.

---

[18]We are somewhat doubtful that Thornberry's unsupported and conclusory affidavit would be sufficient to establish, for purposes of his motion for summary judgment, that he lost his job because Sundesert was cancelled. Under Fed. R. Civ. P. 56(e), affidavits in support of a motion for summary judgment must be made on personal knowledge, and must affirmatively show that the affiant is competent to testify to the matters set forth. *See Rossi v. Trans World Air Lines, Inc.*, 507 F.2d 404, 406 (9th Cir. 1974). Thornberry's affidavit states only that his "employment was terminated as a result of the suspension of the Sundesert project," and it is not clear from the record that this statement is based on Thornberry's personal knowledge, as rule 56(e) requires. The record is devoid of affidavits or other evidence from Thornberry's superiors at SDG&E who might have personal knowledge of the reasons for his termination.

B. The Utilities

The *PG&E* case comes to us in a different procedural posture and on quite different facts. The plaintiffs, PG&E and SCE, allege direct injuries. They claim that the Warren-Alquist Act and the Nuclear Laws impose burdens on them which have caused them to cancel plans to build nuclear plants. Since the redress of these injuries would not depend upon the actions of third parties not before the court, our inquiry can be limited to a single question: whether the plaintiffs' injuries are "fairly traceable" to the Warren-Alquist Act and the Nuclear Laws. *Arlington Heights*, 429 U.S. at 261-62. If the statutes directly caused the claimed injuries, we can assume for standing purposes that the injuries would be redressed by invalidation of the statutes. *See Davis v. United States Department of Housing & Urban Development*, 627 F.2d 942, 944-45 (9th Cir. 1980).

The court below limited its grant of summary judgment for the utilities to the issue of preemption. On the issue of whether the utilities had standing, the court held a trial pursuant to Fed. R. Civ. P. 56(d). Although standing is usually determined on the pleadings, a trial may be held if the facts alleged to support standing are in dispute. *Gladstone, Realtors v. Village of Bellwood*, 441 U.S. 91, 115 n.31 (1979). A reviewing court is then bound by the trial court's findings of fact unless they are clearly erroneous. *Duke Power*, 438 U.S. at 74 n.19.

The trial court found that both PG&E and SCE had decided to include nuclear plants among their power generating facilities in the 1990's; that PG&E had planned to build a nuclear plant known as Stanislaus, for which it had filed a notice of intention with the Energy Commission; that SCE had planned to participate in the building of two nuclear plants known as Nuclear 1 and Nuclear 2; and that both

D. The California Nuclear Statutes Are Void Because They Invade a Federally Preempted Regulatory Field and Conflict With Congress' Purposes Respecting Nuclear Power Plants.

1. Section 25524.2 of the Warren-Alquist Act Is Void.

California Public Resources Code § 25524.2 *prohibits* the construction and operation of a nuclear power plant in California until the State Energy Commission has found, *inter alia*, "that . . . there exists a demonstrated technology or means for the disposal of high-level nuclear waste." The Court of Appeals, characterizing this prohibition as a "moratorium," upheld the statute. The Court erred in doing so for the following reasons:

a. The Court of Appeals misread the statute, concluding that the State Energy Commission and California Legislature are required only to find that the federal government has approved a method of disposing of high-level waste. 659 F.2d at 925. In fact, Section 25524.2 goes much further, requiring the State Energy Commission and the California Legislature to make an *independent* determination whether a satisfactory technology or means for the disposal of high-level nuclear waste *exists in fact*.[15] That meaning is confirmed by a report issued by the California Assembly Committee on Resources, Land Use, and Energy and titled "Reassessment of Nuclear Energy in California: A Policy Analysis of Proposition 15 and Its Alternatives" (1976),

---

[15]Section 25524.2 provides in relevant part: "No nuclear fission thermal powerplant . . . shall be permitted land use in the state, or where applicable, be certified by the commission until both conditions (a) and (b) have been met: (a) The commission finds that there has been developed and that the United States through its authorized agency has approved *and there exists* a demonstrated technology or means for the disposal of high-level nuclear waste (b) The commission has reported its findings and the reasons therefor pursuant to paragraph (a) to the Legislature." (Emphasis added.)

guarantee that the plants will be built. *Id.* It is sufficient that the utilities intend to proceed if the statutes are invalidated. The utilities therefore have standing to sue.

III
RIPENESS

We next consider whether any of the challenges to the statutory provisions before us are ripe for review.

The doctrines of standing and ripeness are closely related, in that the application of either is intended to "prevent courts from becoming enmeshed in abstract questions which have not concretely affected the parties." *Pence v. Andrus*, 586 F.2d 733, 737 (9th Cir. 1978). Like standing, the ripeness doctrine is based in part upon the article III requirement that courts decide only cases or controversies. *Regional Rail Reorganization Act Cases*, 419 U.S. 102, 138 (1974). The exercise of judicial restraint, however, is an added ingredient of the ripeness doctrine by which courts can decline to decide issues which are not yet fit for adjudication. *Id.* Thus, while both doctrines require us to ask whether the plaintiff has suffered harm, ripeness requires an additional inquiry into "whether the harm asserted has matured sufficiently to warrant judicial intervention." *Warth v. Seldin*, 422 U.S. 490, 499 n.10 (1975).

In deciding whether an issue is ripe for review, we "evaluate both the fitness of the issue for judicial decision and the hardship to the parties of withholding court consideration." *Abbott Laboratories v. Gardner*, 387 U.S. 136, 148-49 (1967); *see Western Oil & Gas Association v. United States Environmental Protection Agency*, 633 F.2d 804, 807 (9th Cir. 1980); *Pence*, 586 F.2d at 737.[19] A challenge to

---

[19]Although the *Abbott Laboratories* standard was developed in the context of judicial review of agency actions, it is equally applicable to the present context, where a statute is challenged as unconstitutional. *See Babbitt v. United Farm Workers Nat'l Union*, 442 U.S. 289, 300-01 & n.12 (1979); *Regional Rail Reorganization Act Cases*, 419 U.S. 102, 143-47 (1974).

a statute or regulation that has not yet been applied is generally considered fit for judicial determination if the issue raised is a "purely legal one," *Abbott Laboratories*, 387 U.S. at 149, or one which "further factual development will not render more concrete." *Western Oil & Gas*, 633 F.2d at 808; *see Gardner v. Toilet Goods Association*, 387 U.S. 167, 171 (1967). On the other hand, if the issue would be illuminated by the development of a better factual record, the challenged statute or regulation is generally not considered fit for adjudication until it has actually been applied. *Regional Rail Reorganization Act Cases*, 419 U.S. at 143-44; *Pence*, 586 F.2d at 737 & n.12.

With these principles in mind, we address first, the general certification scheme for electric power plants; second, the requirement that utilities acquire development rights surrounding their proposed plants; third, the requirement that utilities propose three alternative sites for their plants; and finally, the restrictions imposed by the Nuclear Laws.

A. The Warren-Alquist Act

1. The certification system

The certification requirement is the centerpiece of the Warren-Alquist Act's regulatory scheme. In order to decide whether to certify a proposed plant, the Energy Commission gathers information from many sources including the applicant, on a variety of issues. The utilities challenge the Energy Commission's power to gather such information, as well as its power to deny certification.

We find that the challenges to the provisions establishing this regulatory scheme, Cal. Pub. Res. Code §§ 25500, 25502, 25504, 25511, 25512, 25514, 25516, 25517, 25519, 25520, 25523, 25532, are not ripe for adjudication. On the record before us, we have no way of knowing what types of information the Energy Commission might require of the

utilities, or to what purposes the information might be put. As we explain *infra* at pp. 28-36 herein, the utilities' preemption claim may depend upon the reasons for which the Energy Commission requests information or, ultimately, its reasons for denying certification. We cannot presently tell whether the Energy Commission will ever deny certification, or whether such a denial might be based upon impermissible reasons. Because the issue presented "requires factual development, and should not be decided in the abstract," *Pence v. Andrus*, 586 F.2d 733, 737 (9th Cir. 1978), we hold that the challenges to these sections are not ripe.

We also note that a delay in adjudication will not cause any undue hardship for the parties. The certification scheme, in general, does not have an "immediate and substantial impact" on the utilities, *Gardner v. Toilet Goods Association*, 387 U.S. 167, 171 (1967); neither PG&E nor SCE has a notice of intention or application for certification pending,[20] and the threat that procedural burdens might someday be imposed or that certification might someday be denied for failure to meet Energy Commission standards is remote at best.

The utilities contend that the certification system precludes planning for new nuclear plants, and thus does have an immediate impact. In the utilities' view, their planning abilities are compromised by "the risks that the Energy Commission will deny certification and/or the plaintiffs will

---

[20]Prior to the commencement of this lawsuit, PG&E had attempted to submit a notice of intention for its Stanislaus project. The Energy Commission rejected the notice because it contained insufficient data, but a California court ordered the notice accepted. *Pacific Gas & Elec. Co. v. State Energy Resources Conserv. & Dev. Comm'n*, No. 732-870 (Cal. Super. Ct., memorandum of intended decision May 22, 1978; stipulated judgment entered Aug. 15, 1978). PG&E did not resubmit the notice of intention.

be caught in a maze of conflicting decisions and requirements imposed by the Commission and the NRC." Such risks are, however, present whenever a plaintiff challenges a statute that has not yet been applied. *E.g.*, *Boating Industry Associations v. Marshall*, 601 F.2d 1376, 1384-85 (9th Cir. 1979). The utilities cannot establish a justiciable controversy by simply asserting that the risk of future harm causes them a present injury. As we said in *Sea Ranch Association v. California Coastal Zone Conservation Commissions*, 537 F.2d 1058 (9th Cir. 1976), "[a] case or controversy is not presented simply because a party is subject to a general regulatory process which, when applied to the specific facts developed in some future administrative proceeding, *might* cause a state agency to take a particular action which some court *might* thereafter determine to be unconstitutional." *Id.* at 1063 (emphasis in original). *See Toilet Goods Association v. Gardner*, 387 U.S. 158, 163 (1967).

2. The acquisition of development rights

A similar analysis convinces us that the challenge to section 25528 is not ripe for review. In one sense, it presents a purely legal question: can California require a utility to acquire development rights so as to limit the population density surrounding its nuclear plants, when the NRC has not done so? Several factors persuade us, however, that the question would be better decided after the statute has been applied.

First, the Energy Commission may not need to exercise its power to require acquisition of development rights. The Energy Commission is directed to waive the requirement to the extent that existing land use laws maintain a safe population level. Cal. Pub. Res. Code § 25528(c). We have no way of knowing at present whether the Energy Com-

mission will find such laws to be insufficient in any particular case. We are reluctant to rule on the constitutionality of a statute that may never be used. *See Babbitt v. United Farm Workers National Union*, 442 U.S. 289, 305 (1979). Moreover, the statute contemplates that the Energy Commission will ordinarily follow NRC standards on population density. Cal. Pub. Res. Code § 25528(b).[21] It is not clear whether the statute authorizes the Energy Commission to set standards different from those of the NRC. To date, the Energy Commission has neither interpreted the statute nor set different standards. If it did so, our preemption analysis might be affected.

For these reasons, and because we see no harm to the parties in delay, we hold that the utilities' challenge is not ripe. The issue must await the Energy Commission's enforcement of section 25528 in the face of an actual application for certification.

3. The three-site requirement

We find that section 25503, requiring a utility to include at least three alternate sites in its notice of intention, is ripe for review.[22] Unlike the other challenged provisions, the validity of this section is unlikely to depend upon the factual setting in which it is applied. The section applies unequi-

---

[21]Section 25528(b) provides that:

> In the case of an application for a nuclear facility, the area and population density necessary to insure the public's health and safety designated by the commission shall be that as determined from time to time by the United States Nuclear Regulatory Commission, if the commission finds that such determination is sufficiently definitive for valid land use planning requirements.

[22]Our conclusion as to the validity of section 25503 will necessarily affect the validity of two other sections as well: section 25504, requiring certain information as to each of the sites, and section 25516, requiring that at least two sites be found acceptable unless the Energy Commission finds that only one acceptable site is available.

vocally to any utility wishing to submit a notice of intention. Its operation is in no way hypothetical or speculative. *See Regional Rail Reorganization Act Cases*, 419 U.S. 102, 143 (1974). We therefore see no reason to delay adjudication until a utility actually submits a notice of intention containing less than three sites. "Where the inevitability of the operation of a statute against certain individuals is patent, it is irrelevant to the existence of a justiciable controversy that there will be a time delay before the disputed provisions will come into effect." *Id.*; *see Nyquist v. Mauclet*, 432 U.S. 1, 6 n.7 (1977).

B. The Nuclear Laws

1. Sections 25524.1 and 25524.3

The challenges to these sections do not present justiciable controversies. Section 25524.1(a) bars only nuclear plants which require fuel rod reprocessing, and no such plants are currently being planned.[23] The Energy Commission has specifically concluded that fuel rod reprocessing is not currently required, either by the federal government or by existing technology. *In the Matter of Implementation of Nuclear Reprocessing and Waste Disposal Statutes*, Nos. 76-NL-1, 76-NL-3 at 2-3 (ERCDC Jan. 25, 1978). Section 25524.1(a) therefore has no present effect and poses no concrete threat to the utilities.

---

[23]Reprocessing is a mechanical and chemical means of processing spent fuel so as to recover reusable uranium and plutonium. At the time section 25524.3 was enacted into law, reprocessing was viewed as the only available method of disposing of spent fuel. At present, however, concerns about nuclear proliferation and the expense of reprocessing have resulted in spent fuels being stored rather than reprocessed. *See* Nuclear Fuel Cycle Committee, *Status of Nuclear Fuel Reprocessing, Spent Fuel Storage and High-Level Waste Disposal* 8-9 (ERCDC Draft Report Jan. 11, 1978).

Section 25524.1(b) requires the Energy Commission to determine the adequacy of nuclear plants' spent fuel storage capacity. The Energy Commission intends to make such a determination on a case-by-case basis, as the statute requires. *In the Matter of Implementation of Nuclear Reprocessing and Waste Disposal Statutes*, Nos. 76-NL-1, 76-NL-3 at 5 (ERCDC Jan. 25, 1978). Although an Energy Commission committee report at one point recommended requiring all nuclear plants to provide a specified amount of storage space, *see* Nuclear Fuel Cycle Committee, *Status of Nuclear Fuel Reprocessing, Spent Fuel Storage and High-Level Waste Disposal* 113 (ERCDC Draft Report Jan. 11, 1978), the Energy Commission has not adopted such a requirement. Because we cannot know whether the Energy Commission will ever find a nuclear plant's storage capacity to be inadequate, we hold that the challenge to section 25524.1(b) is not ripe for review.

Section 25524.3 imposed a moratorium on certification of nuclear plants pending submission of a certain report to the California legislature. Such a report was adopted by the Energy Commission on September 13, 1978. *In the Matter of the Determinations of the Commission Pursuant to Public Resources Code Section 25524.3*, No. 76-NL-2 (ERCDC Sept. 13, 1978). The record provides no support for the lower court's finding that this report was not submitted to the legislature, and a member of the Energy Commission has testified that it was so submitted. We conclude that the challenge to section 25524.3 is moot.

2. Section 25524.2

Although sections 25524.1(a) and 25524.3 pose no present barrier to the development of nuclear power in California, we cannot say the same of section 25524.2. This section imposes a moratorium on the certification of new nuclear

plants until the Energy Commission has found, and has informed the legislature, that a federally approved method of nuclear waste disposal exists. The Energy Commission has not made the required findings. Section 25524.2 therefore remains in effect, and bars the certification of any new nuclear plants in California.

Section 25524.2 does not have any immediate impact on the utilities; they may continue to submit notices of intention and applications for certification for their proposed nuclear plants, and the Energy Commission must still receive and process the notices and applications even though the required findings have not been made. Cal. Pub. Res. Code § 25524.2(d). No plants may be certified until the findings are made, but the utilities concede that their proposed plants are many years from being eligible for certification.

Nevertheless, we conclude that the challenge to section 25524.2 is ripe for adjudication. The issue before us is a purely legal one, and our ability to deal with it would not be enhanced if we were to delay review. *See Duke Power Co. v. Carolina Environmental Study Group, Inc.*, 438 U.S. 59, 81-82 (1978). Postponement could, moreover, work substantial hardship on the utilities. On the one hand, they could proceed with their plans in the hopes that, when the time for certification came, either the required findings would be made or the law would be struck down. This would require massive expenditures over a number of years, expenditures that quite possibly could not be recovered unless the plant were eventually certified. Alternatively, the utilities could abandon their plans to use nuclear power, with the result that no challenge to section 25524.2 would ever be ripe.

We see no need to place the utilities in such a quandary. Since consideration of the underlying legal issues would be no easier in the context of a specific certification proceeding,

we hold that the issues are ripe. We accordingly turn to the merits of the utilities' preemption claim as it relates to sections 25503 and 25524.2.[24]

IV
PREEMPTION

When a state statute is challenged under the supremacy clause, U.S. Const. art. VI, cl. 2, our inquiry is directed to whether Congress intended to prohibit the states from regulating in such a manner. We start with the assumption that the states' police powers were not to be superseded "unless that was the clear and manifest purpose of Congress." *Rice v. Santa Fe Elevator Corp.*, 331 U.S. 218, 230 (1947); *accord, e.g., Ray v. Atlantic Richfield Co.*, 435 U.S. 151, 157 (1978); *Jones v. Rath Packing Co.*, 430 U.S. 519, 525 (1977).

Congress's purpose is most clear, of course, when the federal statute at issue explicitly prohibits state regulation in the same field. *E.g., Rath Packing*, 430 U.S. at 530-31. When the federal statute contains no such prohibition, congressional intent to preempt may be inferred from the nature of the federal regulatory scheme, *e.g., Ray*, 435 U.S. at 163; *City of Burbank v. Lockheed Air Terminal, Inc.*, 411 U.S. 624, 633 (1973), or from the subject matter being

---

[24]The court below did not abuse its discretion in declining to abstain. Abstention under the doctrine of *Railroad Comm'n v. Pullman Co.*, 312 U.S. 496 (1941), is inappropriate because the case before us does not involve a doubtful issue of state law. *See Canton v. Spokane School Dist. No. 81*, 498 F.2d 840, 845 (9th Cir. 1974). Section 25524.2 unambiguously provides that no nuclear plants are to be certified until certain findings have been made, and it is undisputed that the findings have not been made. Abstention under the doctrine of *Burford v. Sun Oil Co.*, 319 U.S. 315 (1943), is also inappropriate. California has not concentrated challenges to the Warren-Alquist Act in any specialized state court, and the federal issues involved in this case are easily separable from any state issues. *See IBEW Local No. 1245 v. Public Serv. Comm'n*, 614 F.2d 206, 211 (9th Cir. 1980).

regulated, *e.g.*, *Rice*, 331 U.S. at 230; *Hines v. Davidowitz*, 312 U.S. 52, 62-63 (1941). Congressional intent to preempt must, however, be unambiguous. *Florida Lime & Avocado Growers, Inc. v. Paul*, 373 U.S. 132, 146-47 (1963). An intent to preempt cannot be inferred from the mere fact that the federal statute is detailed and complex, *see De Canas v. Bica*, 424 U.S. 351, 359-60 (1976); *New York State Department of Social Services v. Dublino*, 413 U.S. 405, 415 (1973), or because the state legislation touches an area of predominantly national concern, *e.g.*, *De Canas*, 424 U.S. at 354-55; *Kewanee Oil Co. v. Bicron Corp.*, 416 U.S. 470 (1974).

Even if Congress did not intend to preempt all state legislation in a given field, a state law must be held invalid to the extent that it actually conflicts with federal law. For example, a conflict will be found "where compliance with both federal and state regulations is a physical impossibility," *Florida Lime*, 373 U.S. at 142-43, or where the state law "stands as an obstacle to the accomplishment and execution of the full purposes and objectives of Congress," *Hines*, 312 U.S. at 67. *Accord*, *Ray*, 435 U.S. at 158; *Rath Packing*, 430 U.S. at 525-26. Once again, however, the presumption operates in favor of the validity of the state law; courts are not to seek out conflicts between state and federal regulation where none clearly exist. *Huron Portland Cement Co. v. City of Detroit*, 362 U.S. 440, 446 (1960); *see Rice*, 331 U.S. at 237.

A. Congressional Intent to Preempt

1. Division of federal and state authority in the Atomic Energy Act

To determine whether Congress intended to preempt states from regulating nuclear power in the ways California has chosen, we start with an examination of the Atomic

Energy Act of 1954, 42 U.S.C. §§ 2011-2296 (1976 & Supp. III 1979). The history of the Atomic Energy Act of 1954 has been reviewed extensively elsewhere, *see, e.g., Northern States Power Co. v. Minnesota*, 447 F.2d 1143, 1147-52 (8th Cir. 1971), *aff'd mem.*, 405 U.S. 1035 (1972); Murphy & La Pierre, *Nuclear "Moratorium" Legislation in the States and the Supremacy Clause: A Case of Express Preemption*, 76 Colum. L. Rev. 392, 394-410 (1976), and need only be summarized briefly here.

This country's exploration of the peaceful uses of nuclear power began shortly after World War II, with passage of the Atomic Energy Act of 1946, ch. 274, 60 Stat. 755. The 1946 Act transferred responsibility for the development of nuclear power from the military establishment to the civilian Atomic Energy Commission (AEC),[25] but left the federal government with complete control over all nuclear materials and facilities. This federal monopoly ended with passage of the Atomic Energy Act of 1954, which allowed private industry to participate for the first time in the development of nuclear power. The 1954 Act authorized private industry to conduct research and build commercial reactors, under licenses from the AEC. There were no immediate commercial applications of nuclear power at the time the 1954 Act was passed, but Congress believed that nuclear power at a competitive price was at least "on the horizon." S. Rep. No. 1699, 83d Cong., 2d Sess., *reprinted in* [1954] U.S. Code Cong. & Ad. News 3456, 3458.

---

[25]The AEC was dismantled by section 104 of the Energy Reorganization Act of 1974, 42 U.S.C. § 5814, and its promotional functions were transferred to the Energy Research and Development Administration, *id.* The AEC's regulatory functions were transferred to the NRC. *Id.* § 5841. The effects of the Energy Reorganization Act are further discussed at pp. 43-44 herein, *infra*.

Two sections of the Atomic Energy Act of 1954 are significant in determining how Congress intended to divide regulatory responsibility between the states and the federal government. Section 271, 42 U.S.C. § 2018 (1976), provides that nothing in the Atomic Energy Act "shall be construed to affect the authority or regulations of any Federal, State, or local agency with respect to the generation, sale, or transmission of electric power produced through the use of nuclear facilities licensed by the [Nuclear Regulatory] Commission." This section was included in the 1954 Act to ensure that electricity produced by nuclear plants would be subject to the same regulatory authority as electricity produced by any other means. *See* 100 Cong. Rec. 12015, 12197, 12198, 12199 (1954) (remarks of Sen. Hickenlooper & Sen. Humphrey); H.R. Rep. No. 567, 89th Cong., 1st Sess., *reprinted in* [1965] U.S. Code Cong. & Ad. News 2775, 2779.[26] The states' existing authority to regulate utilities was to remain unchanged. As Senator Hickenlooper, the floor manager of the Senate bill, explained:

> We take the position that electricity is electricity. Once it is produced it should be subject to the proper regulatory body, whether it be the Federal Power Commission in the case of interstate transmission, or State regulatory bodies if such exist, or municipal regulatory bodies. We feel that there is no difference and that it should be treated as all other electricity which is regulated by the public.

---

[26]Section 271 was amended in 1965 to provide that states were not authorized to regulate activities of the AEC itself. The amendment was intended to overturn the holding of *Maun v. United States*, 347 F.2d 970 (9th Cir. 1965), which had required an AEC-owned research facility to comply with municipal zoning ordinances. The committee report accompanying the 1965 amendment makes clear that the states' authority over non-AEC projects was not affected. H.R. Rep. No. 567, 89th Cong., 1st Sess., *reprinted in* [1965] U.S. Code Cong. & Ad. News 2775.

. . . .

> [Section 271] is designed to keep the regulatory authority exactly as it is now, traditionally and under the law.

100 Cong. Rec. 12015 (1954).

By 1959, Congress recognized that a more precise line needed to be drawn between the regulatory authority of the AEC and that of the states. Section 274, 42 U.S.C. § 2021 (1976), was added to the Atomic Energy Act of 1954 in an attempt to draw such a line. *See* S. Rep. No. 870, 86th Cong., 1st Sess., *reprinted in* [1959] U.S. Code Cong. & Ad. News 2872, 2873-74, 2878-80. Section 274 authorized the AEC to turn over to particular states the regulatory responsibility for radioisotopes and other less hazardous nuclear materials. The AEC and its successor agency, the NRC, retained sole responsibility for regulating certain more hazardous activities, including "the construction and operation of any production or utilization facility," *i.e.*, nuclear plant. § 274(c)(1), 42 U.S.C. § 2021(c)(1); *see* § 11, 42 U.S.C. § 2014(cc) (1976). Subsection (k), however, provided that "[n]othing in this section shall be construed to affect the authority of any State or local agency to regulate activities for purposes other than protection against radiation hazards." § 274(k), 42 U.S.C. § 2021(k).

The parties' dispute centers on these sections. The utilities argue that section 274(c) gives the NRC sole authority to regulate, for all purposes, the construction and operation of nuclear plants. With regard to the three-site requirement and moratorium provision now before us, the utilities assert that section 274(c) authorizes the NRC to delay licensing of any further nuclear plants until a method of waste disposal is developed, or to require utilities to submit alternate sites for their proposed plants. Since section 274(c) gives the

NRC the power to regulate in this manner, the utilities argue that it necessarily takes away the states' power to regulate.

We think the preemptive effect of section 274(c) is considerably narrower, since it must be read in conjunction with sections 271 and 274(k). Section 271 preserves the states' traditional authority over electrical utilities, and thus permits the states to decide whether additional power plants are needed. The states can also require the submission of accounting data, regulate rates, and the like. Congressional intent with respect to these powers is clear: the states are permitted to treat nuclear plants exactly as they would all other power plants. *See* 100 Cong. Rec. 12015-16, 12197-200 (1954).

Congressional intent with respect to section 274 is nearly as clear. Both the hearings on section 274 and the report of the Joint Committee on Atomic Energy demonstrate Congress's intent to assert exclusive federal control over the radiation hazards associated with nuclear materials.[27] Lim-

---

[27]The Joint Committee on Atomic Energy at one point considered a more explicit version of section 274(k), which would have prohibited the states from regulating "concerning the control of radiation hazards," but would have permitted the states to "adopt registration requirements for [nuclear] materials" and "inspect the use of such materials within the State." S. 2568/H.R. 8755, 86th Cong., 1st Sess., *reprinted in Federal-State Relationships in the Atomic Energy Field: Hearings Before the Joint Committee on Atomic Energy*, 86th Cong., 1st Sess. 486, 488 (1959) [hereinafter cited as *Federal-State Relationships*]. The AEC asked that these provisions be deleted, and that section 274(k) be reduced to its present form. *See Federal-State Relationships, supra*, at 489 (statement of John A. McCone, Chairman, AEC); Letter from A.R. Luedecke, General Manager, AEC, to Senator Clinton P. Anderson, Chairman, Joint Committee on Atomic Energy, *reprinted in Federal-State Relationships, supra*, at 500. The AEC's general manager explained that control over radiation hazards was still preempted under its version of the bill, but that the revision "le[ft] room for the courts to determine the applicability of particular State laws and regulations dealing with matters on the fringe of the [bill's] preempted area." *Id. See Federal-State Relationships, supra*, at 493 (remarks of Robert Lowenstein) (revision leaves courts a little more "latitude of interpretation" and avoids the "rigidity of statutory construction").

ited regulatory authority may be turned over to the states pursuant to section 274(b), but section 274(c) requires the NRC to retain full regulatory control over matters concerning radiation hazards. *See, e.g., Federal-State Relationships, supra* note 27, at 488-97; Letter from A.R. Luedecke to Senator Clinton P. Anderson, *reprinted in Federal-State Relationships, supra* note 27, at 500; S. Rep. No. 870, 86th Cong., 1st Sess., *reprinted in* [1959] U.S. Code Cong. & Ad. News 2872, 2879. However, we find no indication in section 274 or elsewhere in the Atomic Energy Act of 1954 that Congress intended to preempt any state regulation other than that involving radiation hazards. On the contrary, section 274(k) specifically allows the states to regulate "for purposes other than protection against radiation hazards." The committee report explains that "[t]his subsection is intended to make it clear that the bill does not impair the State authority to regulate activities of the AEC licensees for the manifold health, safety, and economic purposes other than radiation protection." S. Rep. No. 870, 86th Cong., 1st Sess., *reprinted in* [1959] U.S. Code Cong. & Ad. News 2872, 2882. Although section 274(c) gives the NRC sole authority to regulate "the construction and operation of [nuclear power plants]," the specific non-preemption language contained in sections 271 and 274(k) must control the general language of section 274(c). We therefore conclude that Congress intended to preempt only state regulation of radiation hazards associated with nuclear power,[28] and not state regulation for other purposes.[29]

---

[28]Enactments since the passage of the Atomic Energy Act have given the states power to protect against radiation hazards in certain circumstances. *See* Clean Air Act Amendments of 1977, § 122, 42 U.S.C. § 7422 (Supp. III 1979) (radioactive emissions); NRC Authorization Act for Fiscal Year 1980, Pub. L. No. 96-295, § 108(e) & (f), 94 Stat. 783 (1980) (plant siting). These provisions are discussed at pp. 44-45 herein, *infra*.

[29]State regulations which directly conflict with regulations of the NRC would, of course, be preempted even if they were enacted for purposes other than protection against radiation hazards. If the NRC required a nuclear plant to be constructed in a certain way for safety reasons, for example, a state could not require the plant to be constructed some other way for environmental reasons. *See New Jersey Dep't of Envir. Protection v. Jersey Central Power & Light Co.*, 69 N.J. 102, 351

We find support for our reading of the statute in the consistent position of the NRC, the AEC, and the courts, that states are permitted to regulate in such areas as economics and the environment. The AEC originally asserted that environmental considerations were the exclusive concern of the states, and could not be taken into account during AEC licensing proceedings. *New Hampshire v. Atomic Energy Commission*, 406 F.2d 170 (1st Cir.), *cert. denied*, 395 U.S. 962 (1969); *see Vermont Yankee Nuclear Power Corp. v. Natural Resources Defense Council, Inc.*, 435 U.S. 519, 531 & n.10 (1978). In *New Hampshire v. AEC*, for example, the AEC argued that it did not need to consider the possibility that a proposed nuclear plant would cause thermal pollution, because "no licensing action on its part relieved a licensee from any obligation to comply with state authorities . . . which do have jurisdiction to deal with thermal effects of power plant discharges." 406 F.2d at 173. The court upheld the AEC's position, and the AEC continued to disregard environmental considerations until the National Environmental Policy Act of 1969, 42 U.S.C. §§ 4321-4347 (1976), required it to take environmental issues into account. *See Calvert Cliffs' Coordinating Committee, Inc. v. United States Atomic Energy Commission*, 449 F.2d 1109, 1112-13 (D.C. Cir. 1971).[30]

Economic considerations have similarly been regarded as outside the purview of the AEC and the NRC. The court

---

[30]More recently, two courts have held that the Atomic Energy Act of 1954 does authorize the NRC to consider environmental issues in its licensing proceedings. *Detroit Edison Co. v. United States Nuclear Regulatory Comm'n*, 630 F.2d 450, 453 (6th Cir. 1980); *Public Serv. Co. v. United States Nuclear Regulatory Comm'n*, 582 F.2d 77, 84-85 (1st Cir.), *cert denied*, 439 U.S. 1046 (1978). Both courts recognized that the states had concurrent regulatory authority under sections 271 and 274(k) of the 1954 Act. *Detroit Edison Co.*, 630 F.2d at 453; *Public Serv. Co.*, 582 F.2d at 85.

in *Cities of Statesville v. Atomic Energy Commission*, 441 F.2d 962, 975 (D.C. Cir. 1969) (en banc), remarked that the AEC "concerns itself not with economic feasibility but with practical development and application of [nuclear] energy." And in *Vermont Yankee Nuclear Power Corp. v. Natural Resources Defense Council, Inc.*, 435 U.S. 519, 550 (1978), the Supreme Court cited section 274(k) for the proposition that "[t]here is little doubt that under the Atomic Energy Act of 1954, state public utility commissions or similar bodies are empowered to make the initial decision regarding the need for power . . . . The [Nuclear Regulatory] Commission's prime area of concern in the licensing context, on the other hand, is national security, public health, and safety." *See State ex rel. Utility Consumers Council v. Public Service Commission*, 562 S.W.2d 688, 698-99 (Mo. App.), *cert. denied*, 439 U.S. 866 (1978) ("The federal government regulates *how* nuclear power plants will be constructed and maintained; the State of Missouri regulates *whether* they will be constructed.")

In concluding that Congress intended to preempt only regulation of radiological hazards, we join the only other circuit court to have considered the issue thus far. In *Northern States Power Co. v. Minnesota*, 447 F.2d 1143 (8th Cir. 1971), *aff'd mem.*, 405 U.S. 1035 (1972), the Eighth Circuit was faced with a Minnesota statute regulating the level of radioactive discharges from nuclear plants. The standards imposed by Minnesota paralleled federal standards, but were considerably more stringent. *Id.* at 1145. The court concluded that section 274 of the Atomic Energy Act of 1954 "demonstrates Congressional recognition that the AEC at that time possessed the sole authority to regulate radiation hazards associated with by-product, source, and special nuclear materials and with production and utilization

facilities." *Id.* at 1149. The court then went on to explain the effect of section 274(k):

> The only logically acceptable reason for inclusion of subsection (k) within [section 274] was to make it clear that Congress was not, by subsection (c) of the 1959 amendment, in any way further limiting the power of the states to regulate activities, *other than radiation hazards*, associated with those areas over which the AEC was forbidden by that subsection to relinquish its control.

Id. at 1150 (emphasis in original).[31] Other courts which have considered the states' power to regulate nuclear plants have made a similar distinction, and have concluded that the Atomic Energy Act preempts only regulations directed at radiation hazards.[32]

---

[31]The Minnesota statute involved in *Northern States* was intended to protect against radiation hazards, and the court held that it was preempted. The court also held that the regulation at issue interfered with a congressional goal of promoting nuclear power. This aspect of the *Northern States* decision is discussed in note 39 *infra*.

[32]In *United States v. City of New York*, 463 F. Supp. 604 (S.D.N.Y. 1978), the court considered New York City's attempt to prohibit Columbia University from operating a research reactor within the city limits. The City's objection was based on the danger that an accidental release of radiation might occur. The court held that such "radiological regulation of the operation of nuclear reactors" was preempted under section 274. 463 F. Supp. at 612.

The court in *Northern Cal. Ass'n to Preserve Bodega Head and Harbor, Inc. v. Public Util. Comm'n*, 61 Cal.2d 126, 390 P.2d 200, 37 Cal. Rptr. 432 (1964), also considered the question of whether states could restrict the location of a nuclear reactor. The court held that the state could keep a reactor from being built in an earthquake zone, since "safety considerations in addition to radiation hazards" were involved. 61 Cal.2d at _____, 390 P.2d at 204, 37 Cal. Rptr. at _____.

Marshall v. Consumers Power Co., 65 Mich. App. 237, 237 N.W.2d 266 (1975), involved a claim that a nuclear plant created a common-law nuisance. Reasoning that section 274 "preempts state action concerning radiological, but not nonradiological matters," 65 Mich. App. at _____, 237 N.W.2d at 275, the court held that it could not consider the plaintiff's allegations about the effectiveness of the plant's emergency core cooling system, but that it could consider allegations concerning steam, fog, and ice created by the plant's cooling pond.

2. The moratorium provision and the three-site requirement

Since Congress intended to permit states to regulate "for purposes other than protection against radiation hazards," § 274(k), we must next inquire whether the California statutes at issue here are aimed at radiation hazards. We conclude that they are not.

The moratorium provision, Cal. Pub. Res. Code § 25524.2, was part of a legislative package[33] enacted as an alternative to a proposed voter initiative, Proposition 15. Proposition 15 would have ultimately barred any nuclear plants in California, unless (1) the federal limit on liability for nuclear accidents, 42 U.S.C. §§ 2012, 2014, 2073, 2210 (1976 & Supp. 1979) (the Price-Anderson Act), was removed; (2) the California legislature determined reactor safety systems to be adequate; and (3) the California legislature determined that nuclear wastes could be stored without danger to the public. *See Reassessment, supra* note 33, at 159-63 (reprinting text of Proposition 15).

Other courts have taken similar positions. *See Commonwealth Edison Co. v. Pollution Control Bd.*, 5 Ill. App. 3d 800, 284 N.E.2d 342 (1972) (state statute regulating level of radioactive discharge is preempted); *State ex rel. Utility Consumers Council v. Public Serv. Comm'n*, 562 S.W.2d 688 (Mo. App.), *cert denied*, 439 U.S. 866 (1978) (state power to grant or deny certificate of public convenience and necessity is not preempted); *cf. New Jersey Dep't of Envir. Protection v. Jersey Central Power & Light Co.*, 69 N.J. 102, 351 A.2d 337 (1976) (state regulation conflicting with AEC regulation is preempted, but not all state regulation of nuclear plants for all purposes).

[33]The package originally contained four bills. A.B. 2823, dealing with liability for nuclear accidents, was defeated by the Ways and Means Committee of the California Assembly. The remaining bills were enacted as sections 25524.1, 25524.2, and 25524.3 of the California Public Resources Code. California Assembly Committee on Resources, Land Use, and Energy, *Reassessment of Nuclear Energy in California: A Policy Analysis of Proposition 15 and Its Alternatives* 154 (1976) [hereinafter cited as *Reassessment*]; 1976 Cal. Stats. chs. 194, 196, 195.

The California Assembly Committee on Resources, Land Use, and Energy, which proposed the package of bills that became the Nuclear Laws, published a lengthy report explaining Proposition 15 and contrasting it with the committee alternatives. *Reassessment, supra* note 33. Proposition 15 was intended to deal with a number of perceived problems with nuclear power, some safety-related and some economic. One major problem identified in the committee report was the lack of a federally approved method of disposing of nuclear wastes. The committee classified this as a "stipulated" problem, since representatives of industry and government, as well as critics of nuclear power, recognized the problem's existence. *Id.* at 2, 12. In addition, the committee classified the problem as "largely economic or the result of poor planning, *not* safety-related." *Id.* at 18 (emphasis in original). As the committee saw it, the lack of a federally approved method of waste disposal created a "clog" in the nuclear fuel cycle; more wastes were continually being produced, storage space was limited, and no permanent means of disposal was available. The committee noted that the costs of nuclear power were escalating sharply, and that "increasing disappointments in portions of the fuel cycle" were a contributing factor. *Id.* at 27-28. Several government witnesses testified that the continued development of nuclear power in the absence of a method of waste disposal was inadvisable. *Id.* at 18-21.

The safety considerations associated with nuclear waste disposal were viewed by the committee as quite a different problem, one on which industry representatives and nuclear critics largely disagreed. *Id.* at 3, 12-13. Critics of nuclear power believed that the methods of waste disposal being considered by the federal government would be inadequate to safeguard the wastes during the hundreds of years that they remained dangerous. The nuclear industry, on the other

hand, believed that the methods of waste disposal being considered would prove adequate once the federal government had invested sufficient time and money in research and testing. *See id.* at 67-71.

Proposition 15 was designed to deal with both types of problems associated with nuclear waste disposal. The proposition would have banned nuclear plants unless the California legislature determined that nuclear wastes could be "stored or disposed of, with no reasonable chance . . . of intentional or unintentional escape of such wastes or radioactivity into the natural environment which will eventually adversely affect the land or the people of the State of California." Proposition 15, § 1 (proposed Cal. Gov. Code § 67503(b)(2)), *reprinted in Reassessment, supra* note 33, at 160. Thus, the California legislature would have had to make an independent judgment about whether a proposed method of waste disposal was safe.[34]

Section 25524.2, in contrast, was intended to deal only with the "stipulated" problem caused by the lack of any approved method of waste disposal. The committee explained that its bills were "designed to provide a pause in the deployment of nuclear power plants until [certain] problems which may 'clog' the nuclear fuel cycle are resolved." *Reassessment, supra* note 33, at 154-55. One of the "major distinguishing features" differentiating Proposition 15 and

---

[34]We express no opinion on whether Proposition 15 or similar laws being considered by other states would be preempted by the Atomic Energy Act. *Compare, e.g.*, Murphy & La Pierre, *Nuclear "Moratorium" Legislation in the States and the Supremacy Clause: A Case of Express Preemption*, 76 Colum. L. Rev. 392 (1976), *with* Barton & Meyers, *The Legal and Political Effects of the California Nuclear Initiative*, in The California Nuclear Initiative 1, 23-26 (1976), *and* Wiggins, *Federalism Balancing and the Burger Court: California's Nuclear Law as a Preemption Case Study*, 13 U.C. Davis L. Rev. 1, 60-86 (1979-80).

the committee bills was that "[w]aste disposal *safety* is not directly addressed by the bills, which ask only that a method be chosen and accepted by the federal government." *Id.* at 156 (emphasis in original).

As the committee report makes clear, section 25524.2 is directed towards purposes other than protection against radiation hazards. While Proposition 15 would have required California to judge the safety of a proposed method of waste disposal, section 25524.2 leaves that judgment to the federal government. California is concerned not with the adequacy of the method, but rather with its existence.[35]

Until a method of waste disposal is approved by the federal government, California has reason to believe that uncertainties in the nuclear fuel cycle make nuclear power an uneconomical and uncertain source of energy. The legislature has chosen to mandate reliance upon other energy sources until these uncertainties associated with nuclear power are resolved. We find that such a choice is expressly authorized under sections 271 and 274(k) of the Atomic Energy Act of 1954.

The requirement that utilities submit three alternate sites for their proposed plants, Cal. Pub. Res. Code §§ 25503, 25504, 25516, is also unrelated to protection against radia-

---

[35]Section 25524.2(b) does permit the California legislature to "disaffirm" an Energy Commission finding that a federally approved method of waste disposal exists. It is not clear whether this provision would permit California to disapprove a method of waste disposal that the NRC had approved. Such a possibility need not concern us here, however. In applying preemption analysis, we "distinguish those situations in which the concurrent exercise of a power by the Federal Government and the States or by the States alone *may possibly* lead to conflicts and those situations where conflicts *will necessarily* arise." *Goldstein v. California*, 412 U.S. 546, 554 (1973) (emphasis in original). There is no necessary conflict between section 25524.2 and federal law, and it will be time to consider any future conflicts if and when they arise. *Rice v. Santa Fe Elevator Corp.*, 331 U.S. 218, 237 (1947).

tion hazards. The requirement applies to all power plants, nuclear and non-nuclear. It provides California with an efficient means of deciding where a proposed power plant should be located. Such decisions have been regarded as within the states' authority, for nuclear as well as other power plants. During hearings on section 274 of the Atomic Energy Act, it was agreed that state and municipal zoning regulations (establishing, for example, residential, commercial, or industrial zones) would apply to nuclear plants. *Federal-State Relationships, supra* note 27, at 494 (remarks of Rep. Price & Sen. Hickenlooper). The AEC's general manager pointed out that section 274(k) would permit the courts latitude in sustaining "certain types of zoning requirements which have purposes other than control of radiation hazards, even though such requirements might have an incidental effect upon the use of . . . nuclear materials licenses [sic] by the Commission." Letter from A.R. Luedecke to Sen. Clinton P. Anderson, *reprinted in Federal-State Relationships, supra* note 27, at 500. More recently, Congress passed legislation explicitly recognizing the states' authority to impose "requirement[s] relating to land use or respecting the siting" of nuclear plants. NRC Authorization Act for Fiscal Year 1980, Pub. L. No. 96-295, § 108(f), 94 Stat. 780 (1980).

California has chosen to determine site suitability on a case-by-case basis rather than through zoning laws. The NRC has itself recognized that states "retain the right, even in the face of the issuance of an NRC construction permit, to preclude construction on such bases as . . . the environmental unacceptability of the proposed facility or site." *Consolidated Edison Company of New York, Inc. (Indian Point Station, Unit No. 2)*, ALAB-453, 7 N.R.C. 31, 34 (1978). California's requirement that utilities submit three alternate sites simply makes the state's suitability deter-

mination more efficient. We hold that the Atomic Energy Act does not prevent California from imposing such a requirement.

C. Conflict with Federal Purposes and Objectives

Even though we conclude that Congress did not intend to preempt state regulations of the type at issue here, the regulations would nonetheless be preempted if they actually conflicted with federal law. As noted above, a conflict would arise if compliance with both federal and state regulations were impossible, *Florida Lime & Avocado Growers, Inc. v. Paul*, 373 U.S. 132, 142-43 (1963), or if the state regulations stood as an obstacle to achievement of congressional objectives, *Hines v. Davidowitz*, 312 U.S. 52, 67 (1941). Compliance with both federal and California laws is possible in the present case, but the utilities contend that the California laws impermissibly interfere with a federal goal of promoting nuclear power.

The utilities argue that the introductory sections of the Atomic Energy Act of 1954, §§ 1-3, 42 U.S.C. §§ 2011-2013 (1976), establish a "Congressional policy to promote the private development of nuclear power plants." These provisions do express Congress's intent to encourage private industry to enter the nuclear field. *E.g.*, § 3(d), 42 U.S.C. § 2013. They also express Congress's intent that the development of nuclear power be "directed so as to promote world peace, improve the general welfare, increase the standard of living, and strengthen free competition in private enterprise." § 1, 42 U.S.C. § 2011. In these objectives we do not find an intent to promote nuclear power at all costs.

The Supreme Court has cautioned that "[i]n expounding a statute, we must not be guided by a single sentence or member of a sentence, but look to the provisions of the whole law, and to its object and policy." *Pennhurst State*

School and Hospital v. Halderman, 49 U.S.L.W. 4363, 4368 (April 20, 1981) (quoting *United States v. Heirs of Boisdore*, 49 U.S. (8 How.) 113, 122 (1849)). Viewing the Atomic Energy Act of 1954 as a whole, we find that Congress struck a balance between state and federal power to regulate.[36] Inherent in the states' regulatory authority is the power to keep nuclear plants from being built, if the plants are inconsistent with the states' power needs, or environmental or other interests. Encompassed in the state's power to enforce zoning laws is the power to deny land use to a nuclear plant. A part of the state's power to issue certificates of public convenience and necessity is the power to deny certification for an unnecessary or uneconomic nuclear plant. These state powers, recognized by sections 271 and 274(k), are inconsistent with a congressional goal of promoting nuclear power at all costs.

In any event, legislation since the passage of the 1954 Act evidences a change in congressional outlook. The energy Reorganization act of 1974, 42 U.S.C. §§ 5801-5891 (1976), restructured the federal regulation of nuclear power by transferring the AEC's regulatory functions to the NRC and its promotional functions to the Energy Research and Development Administration (ERDA).[37] ERDA was directed to develop all sources of energy, including nuclear, but only "consistent with warranted priorities." 42 U.S.C. § 5801(b). The report accompanying the Reorganization Act explains that this provision was inserted in response to "deep concerns regarding the possibility of a pro-nuclear bias in ERDA." S. Rep. No. 93-980, 93d Cong., 2d Sess.,

---

[36]As our previous discussion of sections 271 and 274(k) demonstrates, *see* pp. 30-34 herein, *supra*, Congress recognized that the states would regulate nuclear plants in certain respects.

[37]ERDA's functions were later transferred to the Department of Energy. 42 U.S.C. § 7151(a) (Supp. III 1979).

reprinted in [1974] U.S. Code Cong. & Ad. News 5470, 5476; *see id.* at 5489. ERDA was expected to "place greater relative emphasis on nonnuclear energy." *Id.* at 5480. Congress also passed the Federal Nonnuclear Energy Research and Development Act of 1974, 42 U.S.C. §§ 5901-5917 (1976), directing ERDA to develop "a comprehensive nonnuclear energy research, development, and demonstration program," 42 U.S.C. § 5905(b)(1).

Congress's balanced approach to nuclear power development is further demonstrated by several acts explicitly permitting states to regulate nuclear plants. The Clean Air Act Amendments of 1977, § 122, 42 U.S.C. § 7422 (Supp. III 1979), give states the authority to regulate radioactive air emissions from nuclear plants. States may, if they wish, establish emission standards more stringent than those imposed by the NRC. 42 U.S.C. § 7416; H.R. Conf. Rep. No. 95-564, 95th Cong., 1st Sess. 143, *reprinted in* [1977] U.S. Code Cong. & Ad. News 1502, 1523-24.[38] Congress recognized that state emission standards might prove burdensome for utilities intending to construct nuclear plants, but concluded that "[t]he costs of protecting the public health . . . must be considered a cost of doing business for the nuclear power industry." H.R. Rep. No. 95-294, 95th Cong., 1st Sess. 43, *reprinted in* [1977] U.S. Code Cong. & Ad. News 1077, 1121. The NRC has agreed that a state could, under the authority of the Clean Air Act Amendments of 1977, prevent nuclear plants from being built at all. *E.g.*,

---

[38]The Clean Air Act Amendments of 1977 were intended to overturn the holding of *Northern States Power Co. v. Minnesota*, 447 F.2d 1143 (8th Cir. 1971), *aff'd mem.*, 405 U.S. 1035 (1972), in the specific context of regulation of radioactive air pollutants. *See* H.R. Rep. No. 95-294, 95th Cong., 1st Sess. 43 n.8, *reprinted in* [1977] U.S. Code Cong. & Ad. News 1077, 1121 n. 8; H.R. Conf. Rep. No. 95-564, 95th Cong., 1st Sess. 143, *reprinted in* [1977] U.S. Code Cong. & Ad. News 1502, 1523-24.

Consolidated Edison Company of New York, Inc. (Indian Point Station, Unit No. 2), ALAB-453, 7 N.R.C. 31, 34 & n.13 (1978). Finally, the NRC Authorization Act for Fiscal Year 1980, Pub. L. No. 96-295, 94 Stat. 780 (1980), recognizes the states' authority to set nuclear plant siting and land use requirements more stringent than those of the NRC. *Id.* § 108(f). The Authorization Act also makes issuance of an NRC operating license contingent upon state adoption of plans for responding to nuclear emergencies. *Id.* § 109(a). In light of these demonstrated congressional concerns, we cannot conclude that the California laws at issue here present an obstacle to congressional goals.[39]

---

[39]*Northern States Power Co. v. Minnesota*, 447 F.2d 1143 (8th Cir. 1971), *aff'd mem.*, 405 U.S. 1035 (1972), is not to the contrary. The *Northern States* court had before it a statute which regulated radioactive hazards, an area that was at the time clearly preempted by the Atomic Energy Act. The court thus had no occasion to consider state regulations for other purposes. The Court stated in dicta that if states were allowed to regulate, "they might conceivably be so overprotective in the area of health and safety as to unnecessarily stultify the industrial development and use of atomic energy." *Id.* at 1153-54. *Northern States* does not, however, hold that states may *never* take actions which "stultify the . . . use of atomic energy." The Supreme Court has since suggested that the result in *Northern States* would have been different if the state had been regulating thermal pollution rather than radioactive emissions. *Train v. Colorado Public Interest Research Group, Inc.*, 426 U.S. 1, 16-17 & n. 14 (1976); *see Marshall v. Consumers Power Co.*, 65 Mich. App. 237, ____, 237 N.W.2d 266, 277-78 (1975).

First Iowa Hydro-Elec. Coop. v. Federal Power Comm'n, 328 U.S. 152 (1946), is also not to the contrary. In *First Iowa*, the Supreme Court held that a utility could not be required to obtain a state permit before building a dam to be licensed by the Federal Power Commission. The Court found the state permit requirement impermissible because the Federal Water Power Act specifically gave the FPC responsibility for "a comprehensive plan for improving or developing a waterway or waterways for . . . beneficial public uses." 16 U.S.C. § 803(a); *First Iowa*, 328 U.S. at 160 n. 5, 164 & n. 9. As we have discussed in the text, the Atomic Energy Act gives the NRC no such comprehensive planning responsibility. The fact that a nuclear power plant has met federal standards and obtained a federal license does not of itself prevent the state from imposing additional standards. *Ray v. Atlantic Richfield Co.*, 435 U.S. 151, 164, 168-69 (1978); *Huron Portland Cement Co. v. City of Detroit*, 362 U.S. 440, 447 (1960).

The Supreme Court has held that federal regulation "should not be deemed preemptive of state regulatory power in the absence of persuasive reasons—either that the nature of the regulated subject matter permits no other conclusion, or that Congress has unmistakably so ordained." *De Canas v. Bica*, 424 U.S. 351, 356 (1976) (quoting *Florida Lime*, 373 U.S. at 142). Here, the Atomic Energy Act of 1954 and the other federal statutes we have discussed establish a careful balance between the regulatory responsibilities of the federal government and the states. Congress has not "unmistakably . . . ordained" a goal of promoting nuclear power, but has instead regarded nuclear power as one option which the states may choose.

In *Vermont Yankee Nuclear Power Corp. v. Natural Resources Defense Council, Inc.*, 435 U.S. 519, 558 (1978), the Supreme Court noted that "[t]ime may prove wrong the decision to develop nuclear energy, but it is Congress or the States within their appropriate agencies which must eventually make that judgment." California has made a judgment only that, for the moment, there should be a moratorium on the construction of new nuclear plants. Because California's moratorium provision and the three-site requirement do not fall within the area reserved to the NRC's regulatory authority under the Atomic Energy Act of 1954, and because they do not impede congressional goals, we hold that they are not preempted.

The grant of summary judgment in Nos. 79-3365 and 79-3382 (the *PLF* case) is REVERSED, and the case is REMANDED for trial or for other proceedings consistent with this opinion. The judgment in Nos. 80-4265 and 80-4273 (the *PG&E* case) is REVERSED.

Pacific Legal Foundation v. State Energy Resources Conservation & Development Commission — Nos. 79-3365, 79-3382, 80-4265, 80-4273.

Filed: October 7, 1981.

FERGUSON, Circuit Judge, concurring:

While I concur in the disposition reached in regard to the merits of the plaintiff's preemption claims, I write separately because Congress has not granted a private cause of action to the plaintiffs.

The majority opinion correctly analyzes the standing of each of the plaintiffs to prosecute these lawsuits in terms of the familiar indicia of particularized injury, causation, and the court's capacity to provide redress. It does not, however, address the related question of whether Congress, in enacting the Atomic Energy Act, intended that private entities such as these plaintiffs be empowered to bring lawsuits seeking to impose on the states their own interpretations of the Act. It is my opinion that none of the plaintiffs have any enforcement rights pertaining to the provisions of the Atomic Energy Act.[1]

The plaintiffs in the two cases involved in these appeals seek a judicial determination that various California statutes are unconstitutional, as violations of the Supremacy Clause.

---

[1]At one time, the lack of such an enforcement right was considered to be a bar to Article III standing. *See, e.g., Alabama Power Co. v. Ickes*, 302 U.S. 464, 479 (1938). That restrictive view of standing has now been discarded.

> The "legal interest" test goes to the merits. The question of standing is different. It concerns, apart from the "case" or "controversy" test, the question whether the interest sought to be protected by the complainant is arguably within the zone of interests to be protected or regulated by the statute or constitutional guarantee in question.

Ass'n of Data Processing Service Organizations v. Camp, 397 U.S. 150, 153 (1970). *See also Barlow v. Collins*, 397 U.S. 159, 168 (1970) (Brennan, J., concurring in the result and dissenting).

The Supremacy Clause itself, of course, grants no substantive rights, and a litigant who claims its protection must be able to point to another source for the substantive right—the right to relief—he asserts in his cause of action. These principles are highlighted by recent observations of the Supreme Court in *Chapman v. Houston Welfare Rights Organization*, 441 U.S. 600, 612-15 (1979). The question before the Court in *Chapman* was the reach of the jurisdictional grant in 28 U.S.C. § 1343(3), which covers civil suits for the redress of deprivations of rights, privileges, or immunities secured by the Constitution or by a federal law providing for equal rights. The Court observed that

> the first propositional phrase ["secured by the Constitution"] can be fairly read to describe rights secured by the Supremacy Clause. For even though that Clause is not a source of any federal rights, it does "secure" federal rights whenever they come into conflict with state law. In that sense all federal rights, whether created by treaty, by statute, or by regulation, are "secured" by the Supremacy Clause.

Id. at 613. The Court concluded, however, that

> [i]n order to give meaning to the entire statute as written by Congress, we must conclude that an allegation of incompatibility between federal and state statutes and regulations does not, in itself, give rise to a claim "secured by the Constitution" within the meaning of § 1343(3).

Id. at 615.

The conclusion is thus compelled that the right to relief claimed by the plaintiffs here, although "secured" by the Supremacy Clause, must originate in the Atomic Energy Act itself. We must therefore look to that Act, and to the guiding principles of statutory construction, to discern

whether Congress intended to grant, explicitly or implicitly, any such right to relief to these or similarly placed plaintiffs.[2]

When a plaintiff seeks to challenge federal agency action, the court must "canvass relevant statutory materials," in order to determine "whether Congress meant to deny or to allow judicial review of the agency action at the instance of the plaintiff." *Barlow v. Collins*, 397 U.S. 159, 169 (1970) (Brennan, J., concurring in the result and dissenting). Similarly, when a plaintiff seeks to complain of state action, including state legislative action, on the strength of assertedly preemptive federal statutes, the court must consider whether Congress intended that that plaintiff be authorized to seek relief through judicial action.

Rosado v. Wyman, 397 U.S. 397 (1970), involved the question of whether New York welfare legislation was inconsistent with provisions of the Social Security Act. Justice Black, dissenting, argued that the District Court should not have entertained the lawsuit, because HEW had not had the opportunity to exercise its own judgment on the underlying question of compatibility of the state and federal statutes:

> I think it will be impossible for HEW to fulfill its function under the Social Security Act if its proceedings can be disrupted and its authority undercut by courts

---

[2]My research has disclosed no case which stands as direct precedent for the position taken in the text. Indeed, in a number of more or less analogous contexts, the Supreme Court has reached the merits of preemption claims brought by private litigants without consideration of the question I raise here. *See, e.g., Jones v. Rath Packing Co.*, 430 U.S. 519 (1977); *City of Burbank v. Lockheed Air Terminal*, 411 U.S. 624 (1973); *Askew v. American Waterways Operators, Inc.*, 411 U.S. 325 (1973). In such cases, essentially, the courts are allowing the private litigants to act in the capacity of private attorneys general, and in many, perhaps most, contexts, this practice will serve the public interest. Whether the same can be said in the area of nuclear power regulation is a question which should not be disposed of merely by analogy to other areas of federal regulation. Rather, a searching and independent analysis is called for.

> which rush to make precisely the same determination that the agency is directed by the Act to make. And in instances when HEW is confronted with a particularly sensitive question, the agency might be delighted to be able to pass on to the courts its statutory responsibility to decide the question. In the long run, then, judicial pre-emption of the agency's rightful responsibility can only lead to the collapse of the enforcement scheme envisioned by Congress, and I fear that this case and others have carried such a process well along its way.

Id. at 434-35. In the statutory context of *Rosado*, the Supreme Court considered and rejected the applicability of the reasoning offered by Justice Black and quoted above. The present lawsuits arise in a different statutory and regulatory context, in which I believe that reasoning parallel to Justice Black's should be applied.[3]

As a starting point, we may observe that nowhere in the Atomic Energy Act has Congress explicitly authorized lawsuits such as the ones before us. At the same time, the grant of powers in 42 U.S.C. § 2201(i) (1976) is clearly broad enough to enable the Nuclear Regulatory Commission to pass judgment on such questions as those presented here: "[T]he Commission is authorized to . . . (i) prescribe such regulations or orders as it may deem necessary . . . (3) to govern any activity authorized pursuant to this chapter."

Even though the Atomic Energy Act does not explicitly authorize private actions to enforce its provisions in the face

---

[3]*Northern States Power Company v. State of Minnesota*, 447 F.2d 1143 (8th Cir. 1971), also involved the issue of federal preemption, by the Atomic Energy Act, of state regulation of nuclear power plants. The opinion impliedly holds that Congress has empowered private plaintiffs to bring suits for declaratory relief in this area. It is not persuasive on the point, however, since it does not discuss, or even mention, the need for Congressional authorization of such suits.

of conflicting state statutes, and even though it does empower the Nuclear Regulatory Commission to deal appropriately, within its discretion, with such conflicts, it might be thought that there is nevertheless an *implied* private right of action under the Act.

In *Cort v. Ash*, 422 U.S. 66 (1975), the Supreme Court refused to consider whether the defendant had violated the federal statute sued under, because it found that Congress had not intended to provide any private remedy for its violation, either explicitly or implicitly. The principles enunciated in *Cort* were quite recently reiterated in *California v. Sierra Club*, ____U.S. ____, 49 U.S.L.W. 4441 (April 28, 1981). That case, which makes it clear that the critical question is *not* whether a party would benefit from a particular statute, but whether Congress intended to confer an enforcement right on that party, is dispositive here.

There is nothing on the face of the statute or in its legislative history which suggests that Congress intended to confer rights upon the plaintiffs in these actions.

The Atomic Energy Act, like the Rivers and Harbors Appropriations Act of 1899, as interpreted in *California v. Sierra Club, supra*:

1. Does not carry any implication of an intention to confer rights on a particular class of persons.

2. Was designed to benefit the public at large.

3. Was designed to enable the Nuclear Regulatory Commission to carry out the terms, duties, and responsibilities of the Act.

4. Demonstrates that Congress was not concerned with private rights but with the federal government's ability to respond to atomic energy problems.

I submit that Congress has decided that only the Nuclear Regulatory Commission, and not the plaintiffs, may chal-

lenge California statutes as being preempted by the Act. Of course, a party which is aggrieved by a final action of the Nuclear Regulatory Commission may have a cause of action for judicial review of that action under the Administrative Procedures Act. 5 U.S.C. § 702 (1976). But that is not the posture in which these cases arise.

Finally, *Duke Power Co. v. Carolina Environmental Study Group, Inc.*, 438 U.S. 59 (1978), is not to the contrary. The issue in *Duke Power* was whether private parties had standing to challenge the constitutionality of a section of the Atomic Energy Act. Here, the plaintiffs are claiming enforcement rights under the Act. The issues are quite different, and the tests which govern the disposition of those issues are correspondingly different. Standing to challenge the constitutionality of a statute does not in itself confer enforcement rights under that statute.

Congress has recognized that the future of this nation depends on our collective ability to contain safely nuclear energy. Because the public interest is paramount, a Nuclear Regulatory Commission has been established to oversee the statutory scheme. That Commission's oversight is clearly intended to be comprehensive, and the Congressional goal of bringing to the field of nuclear energy a single, expert, public agency to interpret and carry out the provisions of the Atomic Energy Act is frustrated when individual courts, at the instance of private entities, pass judgment on the scope of that Act. The regulatory plan which Congress so carefully devised cannot be upset by the judicial action sought in cases such as these.

APPENDIX 2.

Order of the Court of Appeals Denying Petition for Rehearing.

United States Court of Appeals for the Ninth Circuit.

Pacific Legal Foundation, a California Nonprofit Corporation, et al., Plaintiffs-Appellees, v. State Energy Resources Conservation & Development Commission, a state agency, et al., Defendants-Appellants.

Natural Resources Defense Council, Inc., et al., Defendants-Intervenors-Appellants.

Pacific Gas and Electric Co. and Southern California Edison Co., Plaintiffs-Appellees, v. State Energy Resources Conservation & Development Commission, a state agency, et al., Defendants-Appellants.

Natural Resources Defense Council, Inc., et al., Defendants-Intervenors-Appellants.

Nos. 79-3365, 79-3382, 80-4265, 80-4273.

ORDER

Filed: January 20, 1982.

Before: FLETCHER and FERGUSON, Circuit Judges and FITZGERALD, District Judge.

The panel as constituted in the above case has voted to deny the petition for rehearing. Judges Fletcher and Ferguson have voted to reject the suggestion for a rehearing en banc, and Judge Fitzgerald has recommended rejection of the suggestion for rehearing en banc.

The full court has been advised of the suggestion for en banc hearing, and no judge of the court has requested a vote on the suggestion for rehearing en banc. Fed. R. App. 35(b).

The petition for rehearing is denied and the suggestion for a rehearing en banc is rejected.

APPENDIX 3.

Opinion of the District Court.

United States District Court, Eastern District of California.

Pacific Gas and Electric Company, et al., Plaintiffs, vs. State Energy Resources Conservation and Development Commission, et al., Defendants. Natural Resources Defense Council, Inc., et al., Intervenors. CV S-78-527-R.

OPINION

Filed: April 25, 1980.

Plaintiffs' have brought this action asking that the California statutory scheme purporting to regulate the construction and operation of nuclear power plants be held to be unconstitutional. The claim of unconstitutionality in whole or in part of these nuclear power statutes is made on the ground that the subject matter or effect of individual sections of the California Public Resources Code are preempted under the Supremacy Clause of the United States Constitution by Congressional enactment of the Atomic Energy Act. Although the attack is specific, the statutes are broadly grouped as those first enacted by the Warren-Alquist Act in 1975 e.g. Sections 25500, 25502, 25504, 25511, 25512, 25514, 25516, 25517, 25520, 25523, 25528, and 25532 and the amendments of 1976 e.g. Sections 25524.1, 25524.2 and 25524.3.

Plaintiffs moved for summary judgment claiming there is no genuine issue of material fact. In response defendants and intervenors argue that summary judgment is inappropriate because they dispute the standing of plaintiffs to pursue this action and claim disputed factual issues must be resolved by trial.

The Court under Rule 56(d) Federal Rules of Civil Procedure may decide upon a Motion for Summary Judgment which material facts exist without substantial controversy and reserve for trial those material facts actually and in good faith controverted. Since pre-emption is the comparison of the parallel reaches of state and federal legislation only a question of law is presented by an attack on a state statutory scheme of intrusive regulation. Standing, on the other hand, can involve disputes as to the factual premises upon which a plaintiff attempts to justify the exercise of jurisdiction by a court. So it is here. The court will decide the question of pre-emption upon the motion for summary judgment. The matter of standing is now decided after trial of the factual issues presented.

STANDING

Plaintiffs are public utilities franchised by the State of California and charged by California Public Utilities Code §451 with the obligation to "furnish and maintain such adequate, efficient, just and reasonable service . . . as is necessary to promote the safety, health, comfort, and convenience of its employees, and the public." This obligation has been met by plaintiffs through the construction and maintenance of power generating plants now in operation using various available methods including the conversion of nuclear energy to electricity.

The power consumption demands of California users much like California's weather is—sometimes unusal [*sic*]—but generally and consistently optimistic. Controlled much by the increase in population and the general economic climate of the state's industry plaintiffs must plan ahead to what they anticipate the power generation needs will be as long as 12 to 14 years in the future. The planning process often requiring expenditure of hundreds of millions of dol-

lars and the construction process often requiring investments in excess of a billion dollars are subject to regulation both state and federal. It is a claim of constitutionally prohibited overlapping regulation particularly in the construction of electrical generating plants employing nuclear power that brings plaintiffs into conflict with defendants in this lawsuit.

Plaintiffs claim of standing is based upon their individually expressed desire to employ the nuclear power plant option to meet future — and replace present — electric generation plant needs. Plaintiffs argue that California's regulatory scheme in the Public Resources Code effectively precludes them from planning and building for the nuclear option. Defendants contest plaintiffs claim of need to use the nuclear option and assert that plaintiffs can meet the presently predictable growth in electricity demands through the year 2000 at least. So, defendants argue there is no present impact on plaintiffs sufficient to permit them to invoke the jurisdiction of this court to satisfy "the wish" of plaintiffs' chief executives.

Although the Court has heard much rhetoric on the merits and demerits of the industrial use of nuclear power, that is not what this case is all about. This Court has neither the jurisdictional power nor the personal inclination to enter the nuclear controversy through the vehicle of this dispute. A court may only act when a controversy is brought to it for decision. The decision then is made only upon the facts and the law presented and necessary for a just resolution of the dispute between the litigants. This case does not present the need to resolve what are political — legislative and executive — ramifications of the policy and climate for commercial exploitation of nuclear power.

The right of a party to invoke the working of the judicial process may present different considerations of standing,

case or controversy, ripeness and mootness. In this case all these concepts merge under the rubric "standing."

Standing of plaintiffs must be determined because the jurisdiction granted by Article III of the United States Constitution to a federal court cannot be invoked simply because someone wants a decision on the constitutionality of a state statute. The time and space of a federal court and the efforts of a federal judge can be employed only to vindicate the rights of those aggrieved in a real way by the existence or application of an unconstitutional legislative enactment. The facility of stating the requirement and principles of standing belies the competing and sometimes difficult factual assertions made by the parties.

Plaintiffs have testified through their respective high level management that they are presently in need of planning ability to develop electric generation from nuclear fuel and are being precluded from that option by the California nuclear statutes challenged herein. Pacific Gas and Electric Company (hereinafter P.G. & E.) has already expended many millions of dollars in the planning of its Stanislaus nuclear power plant project and maintain that it cannot proceed because of the requirements — and some failures to act — of the State Energy Resources Conservation and Development Commission of the State of California (hereafter Energy Commission). Defendants and intervenors have introduced evidence that they claim shows that P.G. & E. cannot and would not proceed with Stanislaus even if relieved of the obligations of the California statutes. They press upon the court the evidence of the reduced estimates of future electric power demand made by the California Public Utilities Commission (hereinafter PUC) and the so called "pause" in the granting of nuclear power plant licenses by the Nuclear Regulatory Commission (hereafter NRC). Financial analyses that indicate P.G. & E. may not

be able to finance another nuclear power plant until the Diablo Canyon plant is cleared for operation and the nuclear incident at Three Mile Island are added to shore up the claim of defendants and intervenors that P.G. & E. lacks standing.

Defendants' and intervenors' reliance on such evidence is misplaced on the question of standing. Standing cannot, and should not, be imposed or defeated by considerations that come outside the good faith concerns of a business for its survival. There is nothing in the evidence presented to the Court that would impugn the bona fides of P.G. & E.'s concern for its planning needs in the immediate future. If that decision is made erroneously it is the stockholders of the company that will undoubtedly suffer. But neither the defendants, nor the intervenors, nor this Court has the responsibility for what is a uniquely management decision.

The claim of Southern California Edison Company (hereafter Edison) raises the same basic concerns on the part of each of the parties to the controversy. Edison's position mirrors P.G. & E's with the exception that Edison has not yet committed any funds to its Nuclear 1 and Nuclear 2 projects. The difference is not significant in its impact on standing.

PRE-EMPTION

Premption [*sic*] addresses the classic and natural functions created by a republican form of government in which state and federal intrusions upon the granted and reserved powers expressed in the United States Constitution must be reconciled. The doctrine emanates from the Supremacy Clause which provides:

> This Constitution, and the Laws of the United States which shall be made in Pursuance thereof; and all Treaties made, or which shall be made, under the Authority of the United States, shall be the supreme Law of the

> Land; and the Judges in every State shall be bound thereby, anything in the Constitution or Laws of any State to the contrary nowithstanding [*sic*].

The Supremacy Clause renders invalid a state statute addressed to a subject matter that Congress, within its constitutional power, marks for the exclusive jurisdiction of the federal government, Rice v Santa Fe Elevator Corp, 331 U.S. 218 91 LEd 1447, 67 S Ct 1146 (1947). Jones v Rath Packing Co. 430 U.S. 519, 51 LED [*sic*] 2d 604, 97 S Ct 1305 (1977), or in a more subtle manner where the state statute substantially impedes the manifest operation of a federal statute in the field in which the federal statute purports to operate. Ray v Atlantic Richfield Co., 435 U.S. 151, 55 LEd 2d 179, 98 S Ct 988 (1978); Florida Lime & Avocado Growers, Inc. v Paul 373 U. S. 132, 10 LEd 2d 248, 83 S Ct 1210 (1963); Hines v Davidowitz, 312 U. S. 52, 85 LEd 581, 61 S Ct 399 (1941).

Nuclear power and its exploitation have been a uniquely national concern since the enactment of the first Atomic Energy Act in 1946 (Public Law 585, Chapter 724) [42 USCA 2011 et seq.] recognized that "the development and utilization of atomic energy shall, so far as practicable, be directed toward improving the public welfare, increasing the standard of living, strengthening free competition in private enterprise and promoting world peace."[1] The control of the development of fissionable material as a source of energy for whatever purpose was placed exclusively in the hands of a federal agency, the Atomic Energy Commission. Congressional feelings towards exclusivity were so strong that Congress itself retained the power to review the licensing and use of atomic energy devices

---

[1]Atomic Energy Act of 1946. Public Law 585 Chapter 724 Section 1(a), 1946 U.S. Code Congressional Service p. 722.

Congress made no change in its view with the enactment of the Atomic Energy Act of 1954. Recognizing the need for re-evaluation of the use of what now came to be called "special nuclear material" Congress re-iterated its desire to maintain national control of nuclear development. Senate Report No. 1699 expresses the concern thusly:

> It is our firmly held conviction that increased private participation in atomic power development, *under the terms stipulated in this proposed legislation*, will measurably accelerate our progress toward the day when economic atomic power will be a fact. (emphasis added.)

The absolute nature of the premption [*sic*] by Congress of regulation of nuclear power is comprehensively reviewed in Northern States Power Company v State of Minnesota, 447 F2d 1143 (8th Cir. 1971). A summary affirmance by the Supreme Court of Northern States (supra) 405 U.S. 1035, 31 L.Ed.2d 576, 92 S.Ct. 1304 makes the decision binding on this Court. The 8th Circuit in Northern States (supra) was expressly concerned with preemption of state regulation of radioactive effluents but the holding goes beyond that narrow concern. The Court says at p. 1154

> . . . we hold that the federal government has exclusive authority under the doctrine of pre-emption to regulate the construction and operation of nuclear power plants, which necessarily includes regulations of the levels of radioactive effluents discharged from the plant.

The enactment of the 1946 Act and the clarification in the 1954 Act essentially re-affirming the 1946 Act makes clear the absolutism of the congressional preemption of nuclear power regulation. The scope of intrusion permissible by state regulation is relaxed only by the scope of the 1959 amendments enacting 42 U.S.C. § 2021. Those amend-

ments recognize state regulation in limited areas covered by contracts between the NRC and a state, 28 U.S.C. 2021(b). The amendments further reiterate the exclusive responsibility of the NRC for "the construction and operation of any production or utilization facility," 42 U.S.C. § 2021(c)(1).

California has not contracted pursuant to 42 U.S.C. § 2021(b). It opted to enact a comprehensive regulatory scheme for regulation of the development of nuclear power in California. It grounds the validity of its regulatory scheme on Section 2021(k) which provides

> Nothing in this section shall be construed to affect the authority of any State or local agency to regulate activities for purposes other than radiation hazards.

To read the term "regulate activities for purposes other than radiation hazards" as a broad renunciation of the exclusivity of the federal government's control of nuclear power development is just too much. Northern States Power Company (supra) at p. 1152 makes it clear that Congress expressly intended "that the federal government retain exclusive control over the *construction and operation* of nuclear reactors cannot be disputed." (emphasis supplied) The presence of Section 2021(k) does however, require the Court to make an analysis section by section of the legislation questioned by plaintiffs to determine the nature and effect of the preemption afforded by the Atomic Energy Act and its various amendments.

Plaintiffs have conceded the propriety of certain parts of the California regulatory scheme and therefore the Court need not tarry in a consideration of those provisions of the California Public Resources Code to which plaintiffs have made concessions of validity.[2]

---

[2]California Public Resources Code § 25500 et seq.

Federal regulation of the construction and operation of nuclear power plants in the United States is codified in Title 10 of the Code of Federal Regulations under the authority of the Atomic Energy Act and its various amendments from 1946 to the present. The regulations require a public utility to apply to the NRC[3] for a permit to construct and a license to operate a nuclear power plant. The applicant must satisfy the NRC of the adequacy of geology, seismology, design, safety systems, population density and environmental impact of the proposed site and finished plant. Rigorous inspection of both the construction and operation of the plant insure conformance to the requirements of the Atomic Energy Act and its implementing regulations.

California's regulatory scheme i.e., Public Resources Code Sections 25500, 25502, 25503, 25504, 25511, 25512, 25514, 25516, 25517, 25519, 25520, 25523, 25524.1, 25524.2, 25524.3, 25528 and 25532 require virtually the same submissions and determinations as those provided in the NRC licensing process. Overlapping requirements include but are not limited to geology, seismology, environmental impact, population density and design of the proposed plant. These requirements together with the limitations upon issuance of California licenses until the State Energy Commission has made certain findings concerning feasibility and methodology of waste disposal are either in conflict with or substantially impede the regulation of nuclear energy reserved to the federal government by the Atomic Energy Act of 1946, its various amendments and the power

---

[3]The Nuclear Regulatory Commission is the successor agency to the Atomic Energy Commission created by the Act of 1946.

to regulate delegated pursuant to that legislation as set out more particularly in the Findings of Facts and Conclusions of Law filed concurrently herewith.

Judgment will be entered accordingly.

/s/ Manuel L. Real

APPENDIX 4.

Findings of Fact and Conclusions of Law of the District Court.

United States District Court, Eastern District of California.

Pacific Gas and Electric Company, et al., Plaintiffs, vs. State Energy Resources Conservation and Development Commission, et al., Defendants. Natural Resources Defense Council, Inc., et al., Intervenors. CV S-78-527-R.

FINDINGS OF FACT AND CONCLUSIONS OF LAW

Filed: April 25, 1980.

On January 14, 1980 this action came on for trial on the issues specified for trial by the Court's Order Pursuant to Federal Rule of Civil Procedure 56(d). Plaintiffs appeared by their attorneys John R. McDonough and Laurence F. Jay of Ball, Hunt, Hart, Brown and Baerwitz; defendants appeared by their attorneys Michael R. Jencks, William M. Chamberlain, Kathryn Burkett Dickson and Dian Grueneich; intervenors appeared by their attorneys Roger Beers and Paul Valentine. The trial continued on January 15 and 18, 1980, whereupon the matter was submitted. Having considered the evidence and written and oral argument presented by all parties, the Court now makes the following Findings of Fact and Conclusions of Law.

FINDINGS OF FACT

1. Plaintiffs, Pacific Gas and Electric Company ("PGandE") and Southern California Edison Company ("Edison"), are corporations duly organized and existing under the laws of the State of California. PGandE and Edison are public utilities engaged in the business of producing and distributing electric power. PGandE serves over 3,000,000 electric power customers in 47 counties of North-

ern and Central California, and Edison serves approximately 3,000,000 electric power customers in 15 counties in Southern and Central California.

2. Defendant State Energy Resources Conservation and Development Commission ("defendant commission") is an agency of the State of California, and defendants Russell Schweickart, Emilio E. Varanini, III, C. Suzanne Reed, Ronald D. Doctor, and James Walker are the duly appointed and/or acting members of defendant commission. All defendants are charged with the administration and enforcement of Sections 25500, 25502, 25503, 25504, 25511, 25512, 25514, 25516, 25517, 25519, 25520, 25523, 25524.1, 25524.2, 25524.3, 25528 and 25532 of the California Public Resources Code ("Public Resources Code").

3. Defendants-intervenors, Natural Resources Defense Council, Inc., Sierra Club, Environmental Defense Fund, and Californians for Nuclear Safeguards, are non-profit corporations that, on April 17, 1979, were granted leave to intervene in this action as defendants.

4. In 1954 Congress enacted the Atomic Energy Act of 1954 ("The Atomic Energy Act"), a primary purpose of which was to authorize, encourage and foster participation by private industry in the utilization of nuclear materials for non-military purposes, including the construction and operation of nuclear fission thermal electric power generating plans ("nuclear power plants"). To accomplish its objectives, the Atomic Energy Act granted the United States Atomic Energy Commission ("AEC") plenary jurisdiction over various matters, including the issuance of licenses to construct and operate nuclear power plants. The Energy Reorganization Act of 1974 created the United States Nuclear Regulatory Commission ("NRC") and transferred to that agency the aforesaid licensing functions of the AEC. In 1954 and thereafter, Congress enacted numerous statutes

designed to assert comprehensive federal control over the construction and operation of nuclear power plants. Pursuant to authority granted by the Atomic Energy Act, the AEC until 1974 and the NRC since have promulgated numerous regulations pertaining to the licensing, construction and operation of nuclear power plants, which regulations are codified in Title 10 of the Code of Federal Regulations.

5. A public utility desiring to build a nuclear power plant must apply to the NRC for both a permit to construct the plant and a license to operate it. In determining whether to grant such permit and license, the NRC requires the applicant to furnish detailed information pertaining to and makes decisions concerning a variety of subjects, including but not limited to the geology and seismology of the proposed site of the plant, population density in the surrounding area, the impact of the plant on the environment, the design of the proposed plant and its safety systems, and the applicant's proposed quality assurance program. In addition, the NRC inspects both the construction and operation of the nuclear power plant to insure that they conform to the requirements of the Atomic Energy Act and its implementing regulations.

6. In 1975, California enacted the Warren-Alquist Act, which created a regulatory scheme that prohibits a public utility from constructing or operating any major new electric power generating facility in California, including a nuclear power plant, without first obtaining authorization (referred to in the Act as "certification") for such construction and operation from defendant commission. Pursuant to the Warren-Alquist Act, an applicant to build a nuclear power plant must first file with defendant commission a notice of intention to file an application for certification ("NOI"), after which filing defendant commission conducts a review process for a period of not to exceed twelve months. If the

NOI is approved, the applicant must then file an application for certification ("AFC"), after which filing defendant commission conducts a further review process for a period not to exceed 18 months. In the course of the NOI and AFC proceedings, defendant commission is authorized and required, by virtue of Public Resources Code Sections 25500, 25502, 25503, 25504, 25511, 25512, 25514, 25516, 25517, 25519, 25520, 25523, 25528 and 25532 (the 1975 provisions of the Warren-Alquist Act challenged herein), to make determinations pertaining to numerous matters which are the subject of determinations by the NRC, including but not limited to the geology and seismology of the proposed site for the nuclear power plant, the anticipated impact of the plant on the environment, limitation of population density in the surrounding area, and the design of the proposed plant. The certificate granted under the Warren-Alquist Act is required to contain specifications for the construction of the plant and defendant commission is required to monitor construction of the plant to see that it conforms to those requirements; defendant commission is also required by the Act to monitor the operation of the facility after it becomes operational.

7. In 1976, California enacted three amendments to the Warren-Alquist Act: Public Resources Code §§25524.1, 25524.2, and 25524.3. Each of these statutes prohibits defendant commission from issuing a certificate for the construction of a nuclear power plant in California unless and until defendant commission has made studies and determinations pertaining to specified matters, all of which fall within the regulatory jurisdiction of the NRC under the Atomic Energy Act of 1954, as amended. Section 25524.1(a) prohibits the construction and operation of a nuclear power plant requiring the reprocessing of fuel rods unless and until defendant commission finds "that the United States through

its authorized agency has identified and approved, and there exists a technology for the construction and operation of, nuclear fuel rod reprocessing plants."* Section 25524.1(b) prohibits the construction and operation of a nuclear power plant unless defendant commission finds with respect to such plant ". . . that facilities with adequate capacity to reprocess [its] nuclear fuel rods . . . or to store such fuel if storage is approved by an authorized agency of the United States are in actual operation or will be in operation at the time such nuclear facility requires such reprocessing or storage . . . ." Section 25524.2 prohibits the construction and operation of a nuclear power plant until defendant commission has made a finding that there exists a "demonstrated technology or means for the disposal of high-level nuclear waste," which is defined as "a method for the permanent and terminal disposition of high-level nuclear waste . . . ."* Section 25524.3 prohibits the construction and operation of a nuclear power plant until defendant commission has "made a study of the necessity for, and effectiveness and economic feasibility of, undergrounding and berm containment of nuclear reactors" and has submitted to the California Legislature a report of its determinations in that regard.

8. On January 25, 1978, defendant commission issued an interim decision determining that it could not then make the high-level waste disposal findings that Public Resources Code §25524.2 requires defendant commission to make

---

*Under §§25524.1(a) and 25524.2 construction and operation of nuclear power plants is further prohibited until defendant commission has reported its findings and the reasons therefor to the California Legislature and 100 legislative days have elapsed without disaffirmance of those findings by either house of the Legislature or, if the findings have been so disaffirmed but have thereafter been reiterated, the Legislature fails to void the findings by statute within 100 legislative days after retransmittal of the findings to the Legislature.

before it may authorize construction and operation of nuclear power plants in California. The decision further stated that California Public Resources Code §25524.1(a) was not then applicable to new light-water nuclear reactors proposed in California, but that if that statute were then applicable the findings regarding fuel rod reprocessing that the statute requires defendant commission to make before it may authorize construction and operation of nuclear power plants in California could not then be made. This decision also stated that, under Public Resources Code §25524.1(b), defendant commission would carefully review the spent fuel storage capacity of each nuclear power plant that came before it for licensing. A copy of the decision is Exhibit A in support of Plaintiffs' Motion for Summary Judgment in this action.

9. On January 11, 1978, the Nuclear Fuel Cycle Committee of defendant commission issued a Draft Report ("Report"). A copy of the Report is Exhibit B in support of Plaintiffs' Motion for Summary Judgment in this action. The Report stated that the requirements of Public Resources Code §25524.2 concerning high-level waste disposal cannot be met unless and until (a) a technology therefor has been demonstrated by "*in situ* large scale tests," which the Report stated have not been undertaken, and (b) the United States government has licensed the operation of "a commercial high-level waste depository." The United States Department of Energy has stated that the target date for commercial operation of such a facility is not sooner than 1988-1990.

10. The Nuclear Fuel Cycle Committee Report also stated that, pursuant to Public Resources Code §25524.1(b), nuclear power plants and related storage structures should be required to be designed to provide, as needed, capacity adequate to store for 50 years after shutdown of a nuclear

power plant all spent nuclear fuel rods resulting from 40 years of plant operation, as well as storage capacity for all nuclear fuel rods loaded in the power plant's reactor. This extent of nuclear fuel storage capacity is not required by federal law and plaintiffs would not voluntarily so design nuclear power plants.

11. Defendant commission has not submitted to the California Legislature the report required by Public Resources Code §25524.3 to be so submitted before defendant commission may authorize construction and operation of nuclear power plants in California.

12. Plaintiffs are required by California Public Resources Code §451 to utilize their best efforts to furnish and maintain adequate, efficient, and reasonable electric power service as is necessary to promote the safety, health, comfort, and convenience of their customers, patrons, employees, and the public. This obligation requires plaintiffs not only to meet existing electric power demand but also to plan and build new facilities necessary to meet future demand.

13. It takes from 12 to 14 years from the time a decision is made to build a nuclear power plant until the plant begins commercial operation. Plaintiffs accordingly must be able to make firm plans far in advance for the construction and licensing of new nuclear power plants if they are to be available when needed. Public utilities such as plaintiffs must make major, multimillion-dollar expenditures and financial commitments for a nuclear power plant project many years in advance of the power plant's commercial operation, to purchase major plant equipment and to employ engineers, designers and consultants, as well as additional personnel to answer inquiries during licensing procedures before the United States Nuclear Regulatory Commission.

14. PGandE's policy is and long has been to have a diversity or "mix" of electric generating resources. For the decade commencing i. 1990, PGandE has decided to include new nuclear power plants in this mix. This decision is based upon the business judgment on the part of PGandE's senior management that: (a) by the early to mid-1990's PGandE must build new electric power generating resources to meet anticipated increases in customer demand for electric power, to replace generating resources which will become obsolete, and to reduce substantially—*i.e.*, by 50% or more—PGandE's reliance upon oil and natural gas to generate electric power; (b) the only available candidates for new baseload generating capacity—*i.e.*, capacity to serve the portion of electric power demand that is constant—are nuclear power plants and coal-fired power plants; (c) PGandE cannot plan to build only new coal-fired baseload plants because of uncertainties which presently exist as to whether such plants can be constructed and operated in California consistently with this state's environmental (air quality) laws; and (d) nuclear power plants can produce electric power at lower cost to ratepayers than coal-fired plants.

15. In the early 1970's PGandE determined to construct a nuclear power plant known as the Stanislaus Nuclear Power Plant ("the Stanislaus project"), to consist of two 1200-megawatt units then intended to be operational in the late 1980's. As of August 30, 1977, PGandE had expended at least $10,000,000 and the Stanislaus project. On August 30, 1977, PGandE filed with defendant commission a notice of intention to file an application for certification of the Stanislaus project ("the NOI"). The NOI was rejected by defendant commission on September 29, 1977, on the ground (stated in the commission's rejection letter and subsequently elaborated in its "Data Adequacy Report") that the NOI was required to contain much additional infor-

mation, including a substantial amount of data concerning and relating to radiological safety of the Stanislaus project. Much of the required information concerned matters which fall within the regulatory jurisdiction of the NRC.

16. Following rejection of the NOI, PGandE commenced a lawsuit in the San Francisco County Superior Court (*Pacific Gas and Electric Company v. State Energy Resources Conservation and Development Commission*, No. 732-870) to compel defendant commission to accept the NOI. After the Superior Court issued a memorandum of intended decision favorable to PGandE on May 22, 1978, PGandE and defendant commission stipulated to, and the court on August 15, 1978 entered, a judgment requiring defendant commission to receive, accept, file and process the NOI. A copy of this judgment is Exhibit F in support of Plaintiffs' Motion for Summary Judgment in this action. However, it became apparent to PGandE that the company had achieved a hollow victory in the Superior Court action because defendant commission intended, in the course of reviewing the Stanislaus NOI under the Warren-Alquist Act, to require PGandE to furnish much information concerning matters within the regulatory jurisdiction of the NRC, based upon the commission's continuing view that the Warren-Alquist Act authorizes defendant commission to make decisions concerning matters subject to inquiry and decision by the NRC.

17. In mid-1978, PGandE suspended the Stanislaus project. This action reflected a consensus reached by senior management of PGandE, based on the events set forth in Findings Nos. 8, 9, 10, 11, 15 and 16 above, that the provisions of the Public Resources Code challenged herein made it impossible, as a practical matter, for PGandE to spend and commit the funds necessary to proceed with the Stanislaus project unless and until those statutes are declared

invalid, for two principal reasons. First, PGandE's management concluded that Public Resources Code §§25524.1, 25524.2, and 25524.3, taken in conjunction with defendant commission's January 25, 1978 decision and the January 11, 1978 Report of its Nuclear Fuel Cycle Committee, create an unreasonable risk that defendant commission would not grant certification to Stanislaus on a timely basis or at all. Second, and particularly in light of defendant commission's intention, in processing the Stanislaus NOI, to require PGandE to furnish information concerning matters within the regulatory jurisdiction of the NRC, PGandE's management concluded that the challenged provisions of the Warren-Alquist Act impose substantial burdens of time and expense upon PGandE and, more importantly, create a substantial risk of conflicting determinations pertaining to the same issues between defendant commission and the NRC, which would preclude or substantially delay governmental approval of the Stanislaus project.

18. As reconfirmed in September, 1977 by PGandE's management committee, the executive committee of PGandE's board of directors, and PGandE's board of directors, PGandE's policy is that (a) so long as the California statutes challenged herein remain operative, PGandE will have no real choice but to continue suspension of the Stanislaus nuclear power plant project and defer indefinitely consideration of additional nuclear power plants; and (b) if the California statutes are judicially determined to be invalid, PGandE will, barring unforeseen circumstances, reactivate the Stanislaus project and once again consider additional nuclear power plants among the electric power generating resources necessary to meet the future demand of PGandE's customers and the public in its service area.

19. In determining that the Stanislaus project will be reactivated if the California statutes are declared invalid,

PGandE's senior management has considered not only the factors set forth in Finding No. 14 above but also considerations that defendants and intervenors argue weigh against that determination, including but not limited to (a) the necessity of obtaining a certificate of convenience and necessity for the Stanislaus project from the California Public Utilities Commission ("PUC") and views expressed by the immediate past and current presidents of the PUC as bearing on that subject; (b) the nuclear incident at Three Mile Island, the Kemeny Report pertaining thereto, and the current NRC "pause" in granting nuclear power plant licenses; (c) the substantial financing requirements of the Stanislaus project, and the bearing thereon of the fact that PGandE's Diablo Canyon nuclear power plant is not yet in operation and the capital costs of that project are therefore not yet included in PGandE's rate base; and (d) the fact that defendant commission's forecast of growth in demand for electric power between 1980 and 2000 is substantially lower than PGandE's forecast.

20. Edison has determined to include nuclear power plants among its new baseload generating facilities intended to begin operation in the 1990's. Pursuant to that determination, Edison's generation resource program includes a nuclear power plant consisting of two 1000-megawatt units, identified as "Nuclear 1" and "Nuclear 2," scheduled to be operational in 1994 and 1995, respectively. Edison's present plan is to have other utilities join Edison as "partners" in this project, with Edison using approximately 350 megawatts of capacity from each unit to meet its needs, and the balance of the plant's capacity being divided among the other partners. The decision of Edison's senior management to build Nuclear 1 and Nuclear 2 is based on the business judgment that demand for electric power in Edison's service area will continue to increase,

that Edison must reduce its reliance upon oil-fired and natural gas-fired power plants, and that nuclear power plants are a proven and desirable means for providing new baseload generating capacity.

21. Notwithstanding its determination to build Nuclear 1 and Nuclear 2, Edison is not currently engaged in planning and other activities to initiate that project because Edison has determined that the existence of the California statutes challenged in this action makes it impossible to do so. This determination is based on senior management's conclusion that Edison cannot prudently spend and commit the funds required to initiate and proceed with Nuclear 1 and Nuclear 2 because (a) the risk of disapproval of Nuclear 1 and Nuclear 2 by defendant commission, based on one or more of Public Resources Code §§25524.1, 25524.2, and 25524.3, makes it impracticable to commence such a project in California, and (b) the provisions of the 1975 Warren-Alquist Act which require Edison to obtain approval by defendants for Nuclear 1 and Nuclear 2 respecting many matters as to which approvals are also required to be obtained from the NRC impose substantial burdens of time and expense on Edison and in addition create an unacceptable risk that defendant commission and the NRC would reach conflicting conclusions pertaining to those matters, thus frustrating or greatly delaying the completion of the plant.

22. If the California statutes challenged herein are held invalid as and to the extent prayed by plaintiffs, Edison will engage in the planning and other activities necessary to initiate a project to construct Nuclear 1 and Nuclear 2. In reaching this determination Edison's senior management has not only considered the factors referred to in Finding No. 20 above, but has also given consideration to other factors bearing upon that determination, including but not limited to (a) the necessity of obtaining a certificate of public con-

venience and necessity for Nuclear 1 and Nuclear 2 from the PUC and the bearing thereon of statements of the current president of the PUC; (b) the nuclear incident at Three Mile Island, the Kemeny Report pertaining thereto, and the current NRC "pause" in licensing nuclear power plants; and (c) the financing requirements of Nuclear 1 and Nuclear 2.

23. Public Resources Code §25503 requires that a notice of intention (NOI) which is filed with defendant commission contain information pertaining to three proposed sites for a new power plant, including a nuclear power plant. This three-site requirement is carried forward in Section 25504, which requires that the NOI include detailed information concerning each of the three sites, and §25516, which provides (with some exceptions) that the NOI may not be approved unless defendant commission finds at least two of the proposed sites acceptable. As applicable to proposed nuclear power plants, this three-site requirement substantially exceeds the extent of site inquiry conducted by the NRC, which requires detailed seismological, geological and other information to be submitted as to only one proposed site, together with a showing sufficient to demonstrate that no other clearly preferable site is available. The three-site requirements and procedures embodied in §§25503, 25504, and 25516 thus impose upon an applicant significant burdens over and above those required to obtain NRC approval of a proposed nuclear power plant site. These requirements and procedures also create the possibility of conflict between determinations made by defendant commission and those made by the NRC concerning which site for the nuclear power plant is to be finally approved.

To the extent that any of the foregoing Findings of Fact should properly have been denominated a Conclusion of Law, it is hereby so designated.

CONCLUSIONS OF LAW

1. This Court has jurisdiction over the subject matter of this action pursuant to 28 U.S.C. §§1331(a) and 1337.

2. Each claim for relief asserted by plaintiffs in this action presents a justiciable controversy ripe for adjudication by this Court.

3. Plaintiffs PGandE and Edison have standing to maintain their respective claims for relief.

4. By the Atomic Energy Act Congress has preempted for exclusive federal regulation those matters pertaining to the construction and operation of nuclear power plants that are regulated by the NRC pursuant to the Atomic Energy Act or rules, regulations, or guidelines promulgated thereunder.

5. By virtue of the federal preemption specified in Conclusion No. 4, the following sections of the California Public Resources Code are unconstitutional and void under the Supremacy Clause of the United States Constitition ("the Supremacy Clause");

(a) Sections 25524.1, 25524.2, and 25524.3.

(b) Section 25528 insofar as it applies to nuclear power plants.

(c) Sections 25500, 25502, 25504, 25511, 25512, 25514, 25516, 25517, 25519, 25520, 25523, and 25532, insofar as these sections or any of them:

(i) authorize or require defendants, or any of them, acting for any purpose or to achieve any objective, to regulate or monitor the construction or operation of any nuclear power plant, or to deny certification of any nuclear power plant, or to deny any approval required to be obtained in the process of seeking certification of such plant, or to condition or qualify any such certification or approval, insofar

as such action is authorized or required to be taken by defendants with reference to, or on the basis of inquiries or determinations respecting, any aspect of the construction or operation of nuclear power plants that falls within the regulatory jurisdiction of the NRC or any successor agency thereto pursuant to the Atomic Energy Act or regulations, rules or guidelines promulgated pursuant to the Atomic Energy Act, including but not limited to the following matters:

(a) transport, handling, and storage of wastes and fuels;

(b) proposed methods to prevent illegal diversion of nuclear fuels;

(c) special design features to account for seismic or other potential hazards;

(d) proposed methods to control density of population in areas surrounding nuclear power plants;

(e) emergency systems, safety precuations [*sic*], or the adequacy of measures proposed by the applicant to protect public health and safety;

(f) design, siting, construction or location of a nuclear power plant;

(g) other factors relating to the safety and reliability of a nuclear power plant;

(h) design criteria and methods of construction and operation of nuclear power plants;

(i) the type or types of fuels or the source of the fuel;

(j) the proposed location of facilities and structures on the site of a nuclear power plant;

(k) provisions for emergency operations and shutdowns of a nuclear power plant;

(l) the effect of a nuclear power plant on environmental quality;

(m) monitoring the construction or operation of a nuclear power plant; or

(ii) require the submission of the information or authorize or require defendants or any of them to require the submission of information for the purpose of enabling defendants or any of them to determine whether to take any of the actions referred to in subparagraph (a) of this paragraph.

(d) Sections 25503, 25504 and 25516, insofar as they (i) require an applicant to provide to defendants or any of them information concerning any nuclear power plant site not proposed or to be proposed by the applicant to the NRC, or (ii) authorize or require defendants or any of them to conduct proceedings or make determinations pertaining to any such site.

6. Each of the California statutes referred to in Conclusion No. 5 above is, to the extent specified in Conclusion No. 5 above, also unconstitutional and void under the Supremacy Clause because each, singly or in conjunction with others, obstructs the accomplishment and execution of the purpose of Congress, manifested in the Atomic Energy Act, to promote the private development of nuclear power plants as electrical energy sources in the United States.

7. Plaintiffs are entitled to judgment declaring the unconstitutionality of the California statutes as specified in Conclusions Nos. 5 and 6 above, and further declaring that defendants, or any of them, may not apply or enforce these statutes or any of them with respect to any nuclear power plant project proposed to be constructed by Edison or PGandE, including the Stanislaus project.

To the extent any of the foregoing Conclusions of Law should properly have been denominated a Finding of Fact, it is hereby so designated.

DATED: April 23, 1980.

/s/ Manuel L. Real
MANUEL L. REAL
UNITED STATES DISTRICT JUDGE

APPENDIX 5.

Judgment of the District Court.

United States District Court, Eastern District of California.

Pacific Gas and Electric Company, et al., Plaintiffs, vs. State Energy Resources Conservation and Development Commission, et al., Defendants. Natural Resources Defense Council, Inc., et al., Intervenors. CV S-78-527-R.

JUDGMENT

Filed: April 25, 1980.

On January 14, 1980 this action came on for trial on the issues specified for trial by the Court's Order Pursuant to Federal Rule of Civil Procedure 56(d). Plaintiffs appeared by their attorneys John R. McDonough and Laurence F. Jay of Ball, Hunt, Hart, Brown and Baerwitz; defendants appeared by their attorneys Michael R. Jencks, William M. Chamberlain, Kathryn Burkett Dickson and Dian Grueneich; intervenors appeared by their attorneys Roger Beers and Paul Valentine. The trial continued on January 15 and January 18, 1980, whereupon the matter was submitted. The Court having considered the evidence and written and oral argument presented by all parties, and having made its findings of fact and conclusions of law, now therefore,

IT IS ORDERED, ADJUDGED AND DECLARED that the following provisions of the California Public Resources Code are unconstitutional and void:

1. Section 25524.1.
2. Section 25524.2.
3. Section 25524.3.
4. Section 25528 insofar as it applies to nuclear fission thermal power plants (hereinafter, "nuclear power plants").

5. Sections 25500, 25502, 25504, 25511, 25512, 25514, 25516, 25517, 25519, 25520, 25523, and 25532, insofar as these sections or any of them:

(a) authorize or require defendants, State Energy Resources Conservation and Development Commission, Russell Schweickart, Emilio E. Varanini, III, C. Suzanne Reed, Ronald D. Doctor, and James Walker ("defendants"), or any of them, acting for any purpose or to achieve any objective, to regulate or monitor the construction or operation of any nuclear power plant, or to deny certification of any nuclear power plant, or to deny any approval required to be obtained in the process of seeking certification of such plant, or to condition or qualify any such certification or approval, insofar as such action is authorized or required to be taken by defendants with reference to, or on the basis of inquiries or determinations respecting, any aspect of the construction or operation of nuclear power plants that falls within the regulatory jurisdiction of the United States Nuclear Regulatory Commission or any successor agency thereto (hereinafter, "the NRC") pursuant to the Atomic Energy Act of 1954, as amended ("the Atomic Energy Act") or regulations, rules or guidelines promulgated pursuant to the Atomic Energy Act, including but not limited to the following matters:

1. Transport, handling and storage of wastes and fuels;

2. proposed methods to prevent illegal diversion of nuclear fuels;

3. special design features to account for seismic or other potential hazards;

4. proposed methods to control density of population in areas surrounding nuclear power plants;

5. emergency systems, safety precautions, or the adequacy of measures proposed by the applicant to protect public health and safety;

6. design, siting, construction or location of a nuclear power plant;

7. other factors relating to the safety and reliability of a nuclear power plant;

8. design criteria and methods of construction and operation of nuclear power plants;

9. the type or types of fuels or the source of fuel;

10. the proposed location of facilities and structures on the site of a nuclear power plant;

11. provisions for emergency operations and shutdowns of a nuclear power plant;

12. the effect of a nuclear power plant on environmental quality;

13. monitoring the construction or operation of a nuclear power plant; or

(b) require the submission of information or authorize or require defendants or any of them to require the submission of information for the purpose of enabling defendants or any of them to determine whether to take any of the actions referred to in subparagraph (a) of this paragraph

6. Sections 25503, 25504 and 25516, insofar as they (a) require an applicant to provide to defendants or any of them information concerning any nuclear power plant site not proposed or to be proposed by the applicant to the NRC, or (b) authorize or require defendants or any of them to conduct proceedings or make determinations pertaining to any such site.

IT IS FURTHER ORDERED, ADJUDGED AND DECLARED that defendants, State Energy Resources Con-

servation and Development Commission, Russell Schweickart, Emilio E. Varanini, III, C. Suzanne Reed, Ronald D. Doctor, and James Walker, or any of them, may not apply or enforce any of the statutes referred to above, to the extent that they have been declared unconstitutional and void above, with respect to any nuclear power plant project heretofore or hereafter proposed to be constructed by Pacific Gas and Electric Company or Southern California Edison Company, including Pacific Gas and Electric Company's Stanislaus Nuclear Power Plant project.

IT IS FURTHER ORDERED, ADJUDGED, AND DECREED that plaintiffs, Pacific Gas and Electric Company and Southern California Edison Company, have and recover their costs of this action from defendants, State Energy Resources Conservation and Development Commission, Russell Schweickart, Emilio E. Varanini, III, C. Suzanne Reed, Ronald D. Doctor, and James Walker, and defendants-intervenors, Natural Resources Defense Council, Inc., Sierra Club, Environmental Defense Fund, and Californians for Nuclear Safeguards.

DATED: April 23, 1980.

/s/ M. Real
MANUEL L. REAL
UNITED STATES DISTRICT JUDGE

APPENDIX 6.

Pertinent Provisions of the Atomic Energy Act of 1954, as Amended.

§ 2011. Congressional declaration of policy

Atomic energy is capable of application for peaceful as well as military purposes. It is therefore declared to be the policy of the United States that—

(a) the development, use, and control of atomic energy shall be directed so as to make the maximum contribution to the general welfare, subject at all times to the paramount objective of making the maximum contribution to the common defense and security; and

(b) the development, use, and control of atomic energy shall be directed so as to promote world peace, improve the general welfare, increase the standard of living, and strengthen free competition in private enterprise.

§ 2012. Congressional findings

The Congress of the United States makes the following findings concerning the development, use, and control of atomic energy:

(a) The development, utilization, and control of atomic energy for military and for all other purposes are vital to the common defense and security.

(b) Repealed. Pub.L. 88-489, § 1, Aug. 26, 1964, 78 Stat. 602.

(c) The processing and utilization of source, byproduct, and special nuclear material affect interstate and foreign commerce and must be regulated in the national interest.

(d) The processing and utilization of source, byproduct, and special nuclear material must be regulated in the national

interest and in order to provide for the common defense and security and to protect the health and safety of the public.

(e) Source and special nuclear material, production facilities, and utilization facilities are affected with the public interest, and regulation by the United States of the production and utilization of atomic energy and of the facilities used in connection therewith is necessary in the national interest to assure the common defense and security and to protect the health and safety of the public.

(f) The necessity for protection against possible interstate damage occurring from the operation of facilities for the production or utilization of source or special nuclear material places the operation of those facilities in interstate commerce for the purposes of this chapter.

(g) Funds of the United States may be provided for the development and use of atomic energy under conditions which will provide for the common defense and security and promote the general welfare.

(h) Repealed. Pub.L. 88-489, § 2, Aug. 26, 1964, 78 Stat. 602.

(i) In order to protect the public and to encourage the development of the atomic energy industry, in the interest of the general welfare and of the common defense and security, the United States may make funds available for a portion of the damages suffered by the public from nuclear incidents, and may limit the liability of those persons liable for such losses.

§ 2013. Purpose of chapter

It is the purpose of this chapter to effectuate the policies set forth above by providing for—

(a) a program of conducting, assisting, and fostering research and development in order to encourage maximum scientific and industrial progress;

(b) a program for the dissemination of unclassified scientific and technical information and for the control, dissemination, and declassification of Restricted Data, subject to appropriate safeguards, so as to encourage scientific and industrial progress;

(c) a program for Government control of the possession, use, and production of atomic energy and special nuclear material, whether owned by the Government or others, so directed as to make the maximum contribution to the common defense and security and the national welfare, and to provide continued assurance of the Government's ability to enter into and enforce agreements with nations or groups of nations for the control of special nuclear materials and atomic weapons;

(d) a program to encourage widespread participation in the development and utilization of atomic energy for peaceful purposes to the maximum extent consistent with the common defense and security and with the health and safety of the public;

(e) a program of international cooperation to promote the common defense and security and to make available to cooperating nations the benefits of peaceful applications of atomic energy as widely as expanding technology and considerations of the common defense and security will permit; and

(f) a program of administration which will be consistent with the foregoing policies and programs, with international arrangements, and with agreements for cooperation, which will enable the Congress to be currently informed so as to take further legislative action as may be appropriate.

§ 2014. Definitions

(cc) The term "utilization facility" means (1) any equipment or device, except an atomic weapon, determined by rule of the Commission to be capable of making use of

special nuclear material in such quantity as to be of significance to the common defense and security, or in such manner as to affect the health and safety of the public, or peculiarly adapted for making use of atomic energy in such quantity as to be of significance to the common defense and security, or in such manner as to affect the health and safety of the public; or (2) any important component part especially designed for such equipment or device as determined by the Commission.

§ 2018. Agency jurisdiction

Nothing in this chapter shall be construed to affect the authority or regulations of any Federal, State, or local agency with respect to the generation, sale, or transmission of electric power produced through the use of nuclear facilities licensed by the Commission: *Provided,* That this section shall not be deemed to confer upon any Federal, State, or local agency any authority to regulate, control, or restrict any activities of the Commission.

§ 2021. Cooperation with States—Purpose

(a) It is the purpose of this section—

(1) to recognize the interests of the States in the peaceful uses of atomic energy, and to clarify the respective responsibilities under this chapter of the States and the Commission with respect to the regulation of byproduct, source, and special nuclear materials;

(2) to recognize the need, and establish programs for, cooperation between the States and the Commission with respect to control of radiation hazards associated with use of such materials;

(3) to promote an orderly regulatory pattern between the Commission and State governments with respect to nuclear development and use and regulation of byproduct, source, and special nuclear materials;

(4) to establish procedures and criteria for discontinuance of certain of the Commission's regulatory responsibilities with respect to byproduct, source, and special nuclear materials, and the assumption thereof by the States;

(5) to provide for coordination of the development of radiation standards for the guidance of Federal agencies and cooperation with the States; and

(6) to recognize that, as the States improve their capabilities to regulate effectively such materials, additional legislation may be desirable.

Agreements with States

(b) Except as provided in subsection (c) of this section, the Commission is authorized to enter into agreements with the Governor of any State providing for discontinuance of the regulatory authority of the Commission under subchapters V, VI, and VII of this chapter, and section 2201 of this title, with resepct to any one or more of the following materials within the State—

(1) byproduct materials as defined in section 2104(e)(1) of this title;

(2) byproduct materials as defined in section 2014(e)(2) of this title;

(3) source materials;

(4) special nuclear materials in quantities not sufficient to form a critical mass.

During the duration of such an agreement it is recognized that the State shall have authority to regulate the materials covered by the agreement for the protection of the public health and safety from radiation hazards.

Commission regulation of certain activities

(c) No agreement entered into pursuant to subsection (b) of this section shall provide for discontinuance of any authority and the Commission shall retain authority and responsibility with respect to regulation of—

(1) the construction and operation of any production or utilization facility;

(2) the export from or import into the United States of byproduct, source, or special nuclear material, or of any production or utilization facility;

(3) the disposal into the ocean or sea of byproduct, source, or special nuclear waste materials as defined in regulations or orders of the Commission;

(4) the disposal of such other byproduct, source, or special nuclear material as the Commission determines by regulation or order should, because of the hazards or potential hazards thereof, not be so disposed of without a license from the Commission. The Commission shall also retain authority under any such agreement to make a determination that all applicable standards and requirements have been met prior to termination of a license for byproduct material, as defined in section 2014(e)(2) of this title. Notwithstanding any agreement between the Commission and any State pursuant to subsection (b) of this section, the Commission is authorized by rule, regulation, or order to require that the manufacturer, processor, or producer of any equipment, device, commodity, or other product containing source, byproduct, or special nuclear material shall not transfer possession or control of such product except pursuant to a license issued by the Commission.

Conditions

(d) The Commission shall enter into an agreement under subsection (b) of this section with any State if—

(1) The Governor of that State certifies that the State has a program for the control of radiation hazards

adequate to protect the public health and safety with respect to the materials within the State covered by the proposed agreement, and that the State desires to assume regulatory responsibility for such materials; and

(2) the Commission finds that the State program is in accordance with the requirements of subsection (*o*) of this section and in all other respects compatible with the Commission's program for the regulation of such materials, and that the State program is adequate to protect the public health and safety with respect to the materials covered by the proposed agreement.

Publication in Federal Register; comment of interested persons

(e)(1) Before any agreement under subsection (b) of this section is signed by the Commission, the terms of the proposed agreement and of proposed exemptions pursuant to subsection (f) of this section shall be published once each week for four consecutive weeks in the Federal Register; and such opportunity for comment by interested persons on the proposed agreement and exemptions shall be allowed as the Commission determines by regulation or order to be appropriate.

(2) Each proposed agreement shall include the proposed effective date of such proposed agreement or exemptions. The agreement and exemptions shall be published in the Federal Register within thirty days after signature by the Commission and the Governor.

Exemptions

(f) The Commission is authorized and directed, by regulation or order, to grant such exemptions from the licensing requirements contained in subchapters V, VI, and VII of this chapter, and from its regulations applicable to licensees

as the Commission finds necessary or appropriate to carry out any agreement entered into pursuant to subsection (b) of this section.

Compatible radiation standards

(g) The Commission is authorized and directed to cooperate with the States in the formulation of standards for protection against hazards of radiation to assure that State and Commission programs for protection against hazards of radiation will be coordinated and compatible.

Consultative, advisory and miscellaneous functions of the Administrator of the Environmental Protection Agency

(h) The Administrator of the Environmental Protection Agency shall consult qualified scientists and experts in radiation matters, including the President of the National Academy of Sciences, the Chairman of the National Committee on Radiation Protection and Measurement, and qualified experts in the field of biology and medicine and in the field of health physics. The Special Assistant to the President for Science and Technology, or his designee, is authorized to attend meetings with, participate in the deliberations of, and to advise the Administrator. The Administrator shall advise the President with respect to radiation matters, directly or indirectly affecting health, including guidance for all Federal agencies in the formulation of radiation standards and in the establishment and execution of programs of cooperation with States. The Administrator shall also perform such other functions as the President may assign to him by Executive order.

Inspections and other functions; training and other assistance

(i) The Commission in carrying out its licensing and regulatory responsibilities under this chapter is authorized to enter into agreements with any State, or group of States,

to perform inspections or other functions on a cooperative basis as the Commission deems appropriate. The Commission is also authorized to provide training, with or without charge, to employees of, and such other assistance to, any State or political subdivision thereof or group of States as the Commission deems appropriate. Any such provision or assistance by the Commission shall take into account the additional expenses that may be incurred by a State as a consequence of the State's entering into an agreement with the Commission pursuant to subsection (b) of this section.

Reserve power to terminate or suspend agreements; emergency situations; State nonaction on causes of danger; authority exercisable only during emergency and commensurate with danger

(j)(1) The Commission, upon its own initiative after reasonable notice and opportunity for hearing to the State with which an agreement under subsection (b) of this section has become effective, or upon request of the Governor of such State, may terminate or suspend all or part of its agreement with the State and reassert the licensing and regulatory authority vested in it under this chapter, if the Commission finds that (1) such termination or suspension is required to protect the public health and safety, or (2) the State has not complied with one or more of the requirements of this section. The Commission shall periodically review such agreements and actions taken by the States under the agreements to ensure compliance with the provisions of this section.

(2) The Commission, upon its own motion or upon request of the Governor of any State, may, after notifying the Governor, temporarily suspend all or part of its agreement with the State without notice or hearing if, in the judgment of the Commission:

(A) an emergency situation exists with respect to any material covered by such an agreement creating danger which requires immediate action to protect the health or safety of persons either within or outside the State, and

(B) the State has failed to take steps necessary to contain or eliminate the cause of the danger within a reasonable time after the situation arose.

A temporary suspension under this paragraph shall remain in effect only for such time as the emergency situation exists and shall authorize the Commission to exercise its authority only to the extent necessary to contain or eliminate the danger.

State regulation of activities for certain purposes

(k) Nothing in this section shall be construed to affect the authority of any State or local agency to regulate activities for purposes other than protection against radiation hazards.

Commission regulated activities;
notice of filing; hearing

(l) With respect to each application for Commission license authorizing an activity as to which the Commission's authority is continued pursuant to subsection (c) of this section, the Commission shall give prompt notice to the State or States in which the activity will be conducted of the filing of the license application; and shall afford reasonable opportunity for State representatives to offer evidence, interrogate witnesses and advise the Commission as to the application without requiring such representatives to take a position for or against the granting of the application.

Limitation of agreements and exemptions

(m) No agreement entered into under subsection (b) of this section, and no exemption granted pursuant to subsection (f) of this section, shall affect the authority of the Commission under section 2201(b) or (i) of this title to issue rules, regulations, or orders to protect the common defense and security, to protect restricted data or to guard against the loss or diversion of special nuclear material. For purposes of section 2201(i) of this title, activities covered by exemptions granted pursuant to subsection (f) of this section shall be deemed to constitute activities authorized pursuant to this chapter; and special nuclear material acquired by any person pursuant to such an exemption shall be deemed to have been acquired pursuant to section 2073 of this title.

Definitions

(a) As used in this section, the term "State" means any State, Territory, or possession of the United States, the Canal Zone, Puerto Rico, and the District of Columbia. As used in this section the term "agreement" includes any amendment to any agreement.

State compliance requirements: compliance with section 2113(b) of this title and health and environmental protection standards; procedures for licenses, rulemaking, and license impact analysis; amendment of agreements for transfer of State collected funds; proceedings duplication restriction

(o) In the licensing and regulation of byproduct material, as defined in section 2014(e)(2) of this title, or of any activity which results in the production of byproduct material as so defined under an agreement entered into pursuant to subsection (b) of this section, a State shall require—

(1) compliance with the requirements of subsection (b) of section 2113 of this title (respecting ownership of byproduct material and land), and

(2) compliance with standards which shall be adopted by the State for the protection of the public health, safety, and the environment from hazards associated with such material which are equivalent, to the extent practicable, or more stringent than, standards adopted and enforced by the Commission for the same purpose, including requirements and standards promulgated by the Commission and the Administrator of the Environmental Protection Agency pursuant to sections 2113, 2114, and 2022 of this title, and

(3) procedures which—

(A) in the case of licenses, provide procedures under State law which include—

(i) an opportunity, after public notice, for written comments and a public hearing, with a transcript,

(ii) an opportunity for cross examination, and

(iii) a written determination which is based upon findings included in such determination and upon the evidence presented during the public comment period and which is subject to judicial review;

(B) in the case of rulemaking, provide an opportunity for public participation through written comments or a public hearing and provide for judicial review of the rule;

(C) require for each license which has a significant impact on the human environment a written analysis (which shall be available to the public before the commencement of any such proceedings) of the impact of such license, including any activities con-

ducted pursuant thereto, on the environment, which analysis shall include—

(i) an assessment of the radiological and non-radiological impacts to the public health of the activities to be conducted pursuant to such license;

(ii) an assessment of any impact on any waterway and ground water resulting from such activities;

(iii) consideration of alternatives, including alternative sites and engineering methods, to the activities to be conducted pursuant to such license; and

(iv) consideration of the long-term impacts, including decommissioning, decontamination, and reclamation impacts, associated with activities to be conducted pursuant to such license, including the management of any byproduct material, as defined by section 2014(e)(2) of this title; and

(D) prohibit any major construction activity with respect to such material prior to complying with the provisions of subparagraph (C).

If any State under such agreement imposes upon any licensee any requirement for the payment of funds to such State for the reclamation or long-term maintenance and monitoring of such material, and if transfer to the United States of such material is required in accordance with section 2113(b) of this title, such agreement shall be amended by the Commission to provide that such State shall transfer to the United States upon termination of the license issued to such licensee the total amount collected by such State from such licensee for such purpose. If such payments are required, they must be sufficient to ensure compliance with the standards established by the Commission pursuant to section 2201(x) of this title. No State shall be required under paragraph (3)

to conduct proceedings concerning any license or regulation which would duplicate proceedings conducted by the Commission.

§ 2039. Advisory Committee on Reactor Safeguards; composition; tenure; duties; compensation; reactor safety research study

There is established an Advisory Committee on Reactor Safeguards consisting of a maximum of fifteen members appointed by the Commission for terms of four years each. The Committee shall review safety studies and facility license applications referred to it and shall make reports thereon, shall advise the Commission with regard to the hazards of proposed or existing reactor facilities and the adequacy of proposed reactor safety standards, and shall perform such other duties as the Commission may request. One member shall be designated by the Committee as its Chairman. The members of the Committee shall receive a per diem compensation for each day spent in meetings or conferences, or other work of the Committee, and all members shall receive their necessary traveling or other expenses while engaged in the work of the Committee. The provisions of section 2203 of this title shall be applicable to the Committee. In addition to its other duties under this section, the committee, making use of all available sources, shall undertake a study of reactor safety research and prepare and submit annually to the Congress a report containing the results of such study. The first such report shall be submitted to the Congress not later than December 31, 1977.

§ 2131. License required

It shall be unlawful, except as provided in section 2121 of this title, for any person within the United States to transfer or receive in interstate commerce, manufacture, produce, transfer, acquire, possess, use, import, or export

any utilization or production facility except under and in accordance with a license issued by the Commission pursuant to section 2133 or 2134 of this title.

§ 2132. Utilization and production facilities for industrial or commercial purposes

(a) Except as provided in subsections (b) and (c) of this section, or otherwise specifically authorized by law, any license hereafter issued for a utilization or production facility for industrial or commercial purposes shall be issued pursuant to section 2133 of this title.

(b) Any license hereafter issued for a utilization or production facility for industrial or commercial purposes, the construction or operation of which was licensed pursuant to section 2134(b) of this title prior to enactment into law of this subsection, shall be issued under section 2134(b) of this title.

(c) Any license for a utilization or production facility for industrial or commercial purposes constructed or operated under an arrangement with the Commission entered into under the Cooperative Power Reactor Demonstration Program shall, except as otherwise specifically required by applicable law, be issued under section 2134(b) of this title.

§ 2133. Commercial licenses—Conditions

(a) The Commission is authorized to issue licenses to persons applying therefor to transfer or receive in interstate commerce, manufacture, produce, transfer, acquire, possess, use, import, or export under the terms of an agreement for cooperation arranged pursuant to section 2153 of this title, utilization or production facilities for industrial or commercial purposes. Such licenses shall be issued in accordance with the provisions of subchapter XV of this chapter

and subject to such conditions as the Commission may by rule or regulation establish to effectuate the purposes and provisions of this chapter.

Nonexclusive basis

(b) The Commission shall issue such licenses on a nonexclusive basis to persons applying therefor (1) whose proposed activities will serve a useful purpose proportionate to the quantities of special nuclear material or source material to be utilized; (2) who are equipped to observe and who agree to observe such safety standards to protect health and to minimize danger to life or property as the Commission may by rule establish; and (3) who agree to make available to the Commission such technical information and data concerning activities under such licenses as the Commission may determine necessary to promote the common defense and security and to protect the health and safety of the public. All such information may be used by the Commission only for the purposes of the common defense and security and to protect the health and safety of the public.

License period

(c) Each such license shall be issued for a specified period, as determined by the Commission, depending on the type of activity to be licensed, but not exceeding forty years, and may be renewed upon the expiration of such period.

Limitations

(d) No license under this section may be given to any person for activities which are not under or within the jurisdiction of the United States, except for the export of production or utilization facilities under terms of an agreement for cooperation arranged pursuant to section 2153 of this title, or except under the provisions of section 2139 of

this title. No license may be issued to an alien or any[1] corporation or other entity if the Commission knows or has reason to believe it is owned, controlled, or dominated by an alien, a foreign corporation, or a foreign government. In any event, no license may be issued to any person within the United States if, in the opinion of the Commission, the issuance of a license to such person would be inimical to the common defense and security or to the health and safety of the public.

Accident notification condition; license revocation; license amendment to include condition

(f)[1] Each license issued for a utilization facility under this section or section 2134(b) of this title shall require as a condition thereof that in case of any accident which could result in an unplanned release of quantities of fission products in excess of allowable limits for normal operation established by the Commission, the licensee shall immediately so notify the Commission. Violation of the condition prescribed by this subsection may, in the Commission's discretion, constitute grounds for license revocation. In accordance with section 2237 of this title, the Commission shall promptly amend each license for a utilization facility issued under this section or section 2134(b) of this title which is in effect on June 30, 1980, to include the provisions required under this subsection.

§ 2201. General duties of Commission

In the performance of its functions the Commission is authorized to—

---

[1]Subsec. (f) added by Pub.L. 96-295 without prior enactment of subsec. (e).

Standards governing use and possession of material

(b) establish by rule, regulation, or order, such standards and instructions to govern the possession and use of special nuclear material, source material, and byproduct material as the Commission may deem necessary to desirable to promote the common defense and security or to protect health or to minimize danger to life or property;

Rules and regulations

(p) make, promulgate, issue, rescind, and amend such rules and regulations as may be necessary to carry out the purposes of this chapter.

§ 2232. License applications—Contents and form

(a) Each application for a license hereunder shall be in writing and shall specifically state such information as the Commission, by rule or regulation, may determine to be necessary to decide such of the technical and financial qualifications of the applicant, the character of the applicant, the citizenship of the applicant, or any other qualifications of the applicant as the Commission may deem appropriate for the license. In connection with applications for licenses to operate production or utilization facilities, the applicant shall state such technical specifications, including information of the amount, kind, and source of special nuclear material required, the place of the use, the specific characteristics of the facility, and such other information as the Commission may, by rule or regulation, deem necessary in order to enable it to find that the utilization or production of special nuclear material will be in accord with the common defense and security and will provide adequate protection to the health and safety of the public. Such technical specifications shall be a part of any license issued. The Commission may at any time after the filing of the original

application, and before the expiration of the license, require further written statements in order to enable the Commission to determine whether a license should be modified or revoked. All applications and statements shall be signed by the applicant or licensee. Applications for, and statements made in connection with, licenses under sections 2133 and 2134 of this title shall be made under oath or affirmation. The Commission may require any other applications or statements to be made under oath or affirmation.

Review of applications by Advisory Committee on Reactor Safeguards; report

(b) The Advisory Committee on Reactor Safeguards shall review each application under section 2133 or section 2134(b) of this title for a construction permit or an operating license for a facility, any application under section 2134(c) of this title for a construction permit or an operating license for a testing facility, any application under subsection (a) or (c) of section 2134 of this title specifically referred to it by the Commission, and any application for an amendment to a construction permit or an amendment to an operating license under 2133 or 2134(a), (b), or (c) of this title specifically referred to it by the Commission, and shall submit a report thereon which shall be made part of the record of the application and available to the public except to the extent that security classification prevents disclosure.

Commercial power; publication

(c) The Commission shall not issue any license under section 2133 of this title for a utilization or production facility for the generation of commercial power until it has given notice in writing to such regulatory agency as may have jurisdiction over the rates and services incident to the proposed activity; until it has published notice of the application in such trade or news publications as the Com-

mission deems appropriate to give reasonable notice to municipalities, private utilities, public bodies, and cooperatives which might have a potential interest in such utilization or production facility; and until it has published notice of such application once each week for four consecutive weeks in the Federal Register, and until four weeks after the last notice.

Preferred consideration

(d) The Commission, in issuing any license for a utilization or production facility for the generation of commercial power under section 2133 of this title, shall give preferred consideration to applications for such facilities which will be located in high cost power areas in the United States if there are conflicting applications for a limited opportunity for such license. Where such conflicting applications resulting from limited opportunity for such license include those submitted by public or cooperative bodies such applications shall be given preferred consideration.

§ 2235. Construction permits

All applicants for licenses to construct or modify production or utilization facilities shall, if the application is otherwise acceptable to the Commission, be initially granted a construction permit. The construction permit shall state the earliest and latest dates for the completion of the construction or modification. Unless the construction or modification of the facility is completed by the completion date, the construction permit shall expire, and all rights thereunder be forfeited, unless upon good cause shown, the Commission extends the completion date. Upon the completion of the construction or modification of the facility, upon the filing of any additional information needed to bring the original application up to date, and upon finding that the facility authorized has been constructed and will operate in

conformity with the application as amended and in conformity with the provisions of this chapter and of the rules and regulations of the Commission, and in the absence of any good cause being shown to the Commission why the granting of a license would not be in accordance with the provisions of this chapter, the Commission shall thereupon issue a license to the applicant. For all other purposes of this chapter, a construction permit is deemed to be a "license".

§ 2236. Revocation of licenses—False applications; failure of performance

(a) Any license may be revoked for any material false statement in the application or any statement of fact required under section 2232 of this title, or because of conditions revealed by such application or statement of fact or any report, record, or inspection or other means which would warrant the Commission to refuse to grant a license on an original application, or for failure to construct or operate a facility in accordance with the terms of the construction permit or license or the technical specifications in the application, or for violation of, or failure to observe any of the terms and provisions of this chapter or of any regulation of the Commission.

Procedure

(b) The Commission shall follow the provisions of section 9(b) of the Administrative Procedure Act in revoking any license.

Repossession of material

(c) Upon revocation of the license, the Commission may immediately retake possession of all special nuclear material held by the licensee. In cases found by the Commission to be of extreme importance to the national defense

and security or to the health and safety of the public, the Commission may recapture any special nuclear material held by the licensee or may enter upon and operate the facility prior to any of the procedures provided under the Administrative Procedure Act. Just compensation shall be paid for the use of the facility.

§ 2239. Hearings and judicial review

(a) In any proceeding under this chapter, for the granting, suspending, revoking, or amending of any license or construction permit, or application to transfer control, and in any proceeding for the issuance or modification of rules and regulations dealing with the activities of licensees, and in any proceeding for the payment of compensation, an award or royalties under sections 2183, 2187, 2236(c) or 2238 of this title, the Commission shall grant a hearing upon the request of any person whose interest may be affected by the proceeding, and shall admit any such person as a party to such proceeding. The Commission shall hold a hearing after thirty days' notice and publication once in the Federal Register, on each application under section 2133 or 2134(b) of this title for a construction permit for a facility, and on any application under section 2134(c) of this title for a construction permit for a testing facility. In cases where such a construction permit has been issued following the holding of such a hearing, the Commission may, in the absence of a request therefor by any person whose interest may be affected, issue an operating license or an amendment to a construction permit or an amendment to an operating license without a hearing, but upon thirty days' notice and publication once in the Federal Register of its intent to do so. The Commission may dispense with such thirty days' notice and publication with respect to any application for an amendment to a construction permit or an amendment

to an operating license upon a determination by the Commission that the amendment involves no significant hazards consideration.

(b) Any final order entered in any proceeding of the kind specified in subsection (a) of this section shall be subject to judicial review in the manner prescribed in the Act of December 29, 1950, as amended, and to the provisions of section 10 of the Administrative Procedure Act, as amended.

§ 2241. Atomic safety and licensing boards; establishment; membership; functions; compensation

(a) Notwithstanding the provisions of 7(a) and 8(a) of the Administrative Procedure Act, the Commission is authorized to establish one or more atomic safety and licensing boards, each comprised of three members, one of whom shall be qualified in the conduct of administrative proceedings and two of whom shall have such technical or other qualifications as the Commission deems appropriate to the issues to be decided, to conduct such hearings as the Commission may direct and make such intermediate or final decisions as the Commission may authorize with respect to the granting, suspending, revoking or amending of any license or authorization under the provisions of this chapter, any other provision of law, or any regulation of the Commission issued thereunder. The Commission may delegate to a board such other regulatory functions as the Commission deems appropriate. The Commission may appoint a panel of qualified persons from which board members may be selected.

(b) Board members may be appointed by the Commission from private life, or designated from the staff of the Commission or other Federal agency. Board members ap-

pointed from private life shall receive a per diem compensation for each day spent in meetings or conferences, and all members shall receive their necessary traveling or other expenses while engaged in the work of a board. The provisions of section 2203 of this title shall be applicable to board members appointed from private life.

APPENDIX 7.

Pertinent Provisions of Title 10 of the Code of Federal Regulations.

Subpart A—Procedure for Issuance, Amendment, Transfer, or Renewal of a License

§ 2.101 Filing of application.

(a)(1) An application for a license or an amendment to a license shall be filed with the Director of Nuclear Reactor Regulation or Director of Nuclear Material Safety and Safeguards, as prescribed by the applicable provisions of this chapter. A prospective applicant may confer informally with the staff prior to the filing of an application.

(2) Each application for a license for a facility, or for receipt of waste radioactive material from other persons for the purpose of commercial disposal by the waste disposal licensee, will be assigned a docket number. However, to allow a determination as to whether an application for a construction permit or operating license for a production or utilization facility is complete and acceptable for docketing, it will be initially treated as a tendered application after it is received and a copy of the tendered application will be available for public inspection in the Commission's Public Document Room, 1717 H Street, N.W., Washington, D.C. Generally, that determination will be made within a period of thirty (30) days. However, in selected construction permit applications, the Commission may decide to determine acceptability on the basis of the technical adequacy of the application as well as its completeness. In such cases, the Commission, pursuant to § 2.104(a), will direct that the notice of hearing be issued as soon as practicable after the application has been tendered, and the determination of acceptability will generally be made within a period of sixty (60) days.

(3) If the Director of Nuclear Reactor Regulation or Director of Nuclear Material Safety and Safeguards, as appropriate, determines that a tendered application for a construction permit or operating license for a production or utilization facility, and/or any environmental report required pursuant to Part 51 of this chapter, or part thereof as provided in paragraphs (a)(5) or (a-1) of this section, are complete and acceptable for docketing, a docket number will be assigned to the application or part thereof, and the applicant will be notified of the determination. With respect to the tendered application and/or environmental report or part thereof that is acceptable for docketing, the applicant will be requested to:

(i) Submit to the Director of Nuclear Reactor Regulation or Director of Nuclear Material Safety and Safeguards, as appropriate, such additional copies as the regulations in Parts 50 and 51 require:

(ii) Serve a copy on the chief executive of the municipality in which the facility is to be located or, if the facility is not to be located within a municipality, on the chief executive of the county, and serve a notice of availability of the application or environmental report on the chief executives of the municipalities or counties which have been identified in the application or environmental report as the location of all or part of the alternative sites, containing the following information: Docket number of the application, a brief description of the proposed site and facility; the location of the site and facility as primarily proposed and alternatively listed; the name, address, and telephone number of the applicant's representative who may be contacted for further information; notification that a draft environmental impact statement will be issued by the Commission and will be made available upon request to the Commission; and notification that if a request is received from the ap-

propriate chief executive, the applicant will transmit a copy of the application and environmental report, and any changes to such documents which affect the alternative site location, to the executive who makes the request. In complying with the requirements of this paragraph (a)(3)(ii) the applicant should not make public distribution of those parts of the application subject to § 2.790(d). The applicant shall submit to the Director of Nuclear Reactor Regulation an affidavit that service of the notice of availability of the application or environmental report has been completed along with a list of names and addresses of those executives upon whom the notice was served; and

(iii) Make direct distribution of additional copies to Federal, State, and local officials in accordance with the requirements of this chapter and written instructions furnished to the applicant by the Director of Nuclear Reactor Regulation or Director of Nuclear Material Safety and Safeguards, as appropriate. Such written instructions will be furnished as soon as practicable after all or any part of the application, or environmental report, is tendered. The copies submitted to the Director of Nuclear Reactor Regulation Director of Nuclear Material Safety and Safeguards, as appropriate, and distributed by the applicant shall be completely assembled documents, identified by docket number. Subsequently distributed amendments to applications, however, may include revised pages to previous submittals and, in such cases, the recipients will be responsible for inserting the revised pages.

(4) The tendered application for a construction permit or operating license for a production or utilization facility will be formally docketed upon receipt by the Director of Nuclear Reactor Regulation or Director of Nuclear Material Safety and Safeguards, as appropriate, of the required additional copies. Distribution of the additional copies shall

be deemed to be complete as of the time the copies are deposited in the mail or with a carrier prepaid for delivery to the designated addresses. The date of docketing shall be the date when the required copies are received by the Director of Nuclear Reactor Regulation or Director of Nuclear Material Safety and Safeguards, as appropriate. Within ten (10) days after docketing the applicant shall submit to the Director of Nuclear Reactor Regulation or Director of Nuclear Material Safety and Safeguards, as appropriate, an affidavit that distribution of the additional copies to Federal, State, and local officials has been completed in accordance with requirements of this chapter and written instructions furnished to the applicant by the Director of Nuclear Reactor Regulation or Director of Nuclear Material Safety and Safeguards, as appropriate. Amendments to the application and environmental report shall be filed and distributed and an affidavit shall be furnished to the Director of Nuclear Reactor Regulation or Director of Nuclear Material Safety and Safeguards, as appropriate, in the same manner as for the initial application and environmental report. If it is determined that all or any part of the tendered application and/or environmental report is incomplete and therefore not acceptable for processing, the applicant will be informed of this determination, and the respects in which the document is deficient.

(5) An applicant for a construction permit for a production or utilization facility which is subject to § 51.5(a) of this chapter, and is of the type specified in §§ 50.21(b)(2) or (3) or 50.22 of this chapter or is a testing facility may submit the information required of applicants by Part 50 of this chapter in three parts. One part shall be accompanied by the information required by § 50.30(f) of this chapter, another part shall include any information required by § 50.34(a) and, if applicable, § 50.34a of this chapter and

a third part shall include any information required by § 50.33a. One part may precede or follow other parts by no longer than six (6) months except that the part including information required by § 50.33a shall be submitted in accordance with time periods specified in § 50.33a. If an applicant for a construction permit for a nuclear power reactor is exempted pursuant to § 50.33a of this chapter from filing the information described by § 50.33a of this chapter, such applicant shall file with the first part of its application an affidavit setting forth facts as to the electrical generating capacity of its system. If it is determined that any one of the parts as described above is incomplete and not acceptable for processing, the Director of Nuclear Reactor Regulation or Director of Nuclear Material Safety and Safeguards, as appropriate, will inform the applicant of this determination and the respects in which the document is deficient. Such a determination of completeness will generally be made within a period of thirty (30) days. Except for the part including information required by § 50.33a, whichever part is filed first shall also include the fee required by § 50.30(e) and 170.21 of this chapter and the information required by §§ 50.33, 50.34(a)(1), and 50.37 of this chapter. The Director of Nuclear Reactor Regulation or Director of Nuclear Material Safety and Safeguards, as appropriate, will accept for docketing an application for a construction permit for a production or utilization facility which is subject to § 51.5(a) of this chapter, and is of the type specified in §§ 50.21(b) (2) or (3) or 50.22 of this chapter or is a testing facility where one part of the application as described above is complete and conforms to the requirements of Part 50 of this chapter. Additional parts will be docketed upon a determination by the Director of Nuclear Reactor Regulation or Director of Nuclear Material Safety and Safeguards, as appropriate, that they are complete.

(a-1) *Early consideration of site suitability issues.* An applicant for a construction permit for a utilization facility which is subject to § 51.5(a) of this chapter and is of the type specified in §§ 50.21(b) (2) or (3) or 50.22 of this chapter or is a testing facility, may request that the Commission conduct an early review and hearing and render an early partial decision in accordance with Subpart F on issues of site suitability within the purview of the applicable provisions of Parts 50, 51 and 100 of this chapter. In such cases, the applicant for the construction permit may submit the information required of applicants by the provisions of this chapter in three or (in the case of nuclear power reactors) four parts:

(1) Part one shall include or be accompanied by any information required by §§ 50.34(a)(1) and 50.30(f) of this chapter which relates to the issue(s) of site suitability for which an early review, hearing and partial decision are sought, except that information with respect to operation of the facility at the projected initial power level need not be supplied, and shall include the information required by §§ 50.33(a) through (e) and 50.37 of this chapter. The information submitted shall also include: (i) Proposed findings on the issues of site suitability on which the applicant has requested review and a statement of the bases or the reasons for those findings (ii) a range of postulated facility design and operation parameters that is sufficient to enable the Commission to perform the requested review of site suitability issues under the applicable provisions of Parts 50, 51 and 100, and (iii) information concerning the applicant's site selection process and long-range plans for ultimate development of the site required by § 2.603(b)(1).

(2) Part two shall include or be accompanied by the remaining information required by §§ 50.30(f), 50.33 and 50.34(a)(1) of this chapter.

(3) Part three shall include the remaining information required by §§ 50.34(a) and (in the case of a nuclear power reactor) 50.34a of this chapter.

(4) The information required for part two or part three shall be submitted during the period the partial decision on part one is effective. Submittal of the information required for part three may precede by no more than six months or follow by no more than six months the submittal of the information required for part two.

(5) Part four,[1] which is only required when the application is for a construction permit for a nuclear power reactor, shall include any information required by § 50.33a of this chapter and shall be filed in accordance with the time periods specified in § 50.33a.

(b) After the application has been docketed, each applicant for a license for receipt of waste radioactive material from other persons for the purpose of commercial disposal by the waste disposal licensee shall serve a copy of the application and environmental report, as appropriate, on the chief executive of the municipality in which the activity is to be conducted or, if the activity is not to be conducted within a municipality on the chief executive of the county, and serve a notice of availability of the application or environmental report on the chief executives of the municipalities or counties which have been identified in the application or environmental report as the location of all or part of the alternative sites, containing the following information: Docket number of the application; a brief description of the proposed site and facility; the location of the site and facility as primarily proposed and alternatively listed;

---

[1]For a construction permit application in four parts, part four shall be filed second in time since it must precede both parts two and three by a period of from 9 months to 3 years.

the name, address, and telephone number of the applicant's representative who may be contacted for further information; notification that a draft environmental impact statement will be issued by the Commission and will be made available upon request to the Commission; and notification that if a request is received from the appropriate chief executive, the applicant will transmit a copy of the application and environmental report, and any changes to such documents which affect the alternative site location, to the executive who makes the request. In complying with the requirements of this paragraph (b) the applicant should not make public ditribution of those parts of the application subject to § 2.790(d). The applicant shall submit to the Director of Nuclear Material Safety and Safeguards an affidavit that service of the notice of availability of the application or environmental report has been completed along with a list of names and addresses of those executives upon whom the notice was served.

(c) The notice published in the Federal Register announcing docketing of the antitrust information part of the application for a facility license under section 103 of the Act, except for those applications described in § 2.102(d)(2), will state that:

(1) The portion of the application filed contains the information requested by the Attorney General for the purpose of an antitrust review of the application as set forth in Appendix L to Part 50 of this chapter.

(2) Upon receipt and acceptance for docketing of the remaining portions of the application dealing with radiological health and safety and environmental matters, notice of receipt will be published in the Federal Register including an appropriate notice of hearing; and

(3) Any person who wishes to have his views on the antitrust matters of the application presented to the Attorney General for consideration should submit such views within sixty (60) days after publication of the notice announcing receipt of the antitrust information to the U.S. Nuclear Regulatory Commission, Washington, D.C. 20555, Attention: Chief, Antitrust and Indemnity Group.

(d) The Director of Nuclear Reactor Regulation or Director of Nuclear Material Safety and Safeguards, as appropriate, will give notice of the docketing of the public health and safety, common defense and security, and environmental parts of an application for a license for a facility, or for receipt of waste radioactive material from other persons for the purpose of commercial disposal by the waste disposal licensee, to the Governor or other appropriate official of the State in which the facility is to be located or the activity is to be conducted, and will cause to be published in the Federal Register a notice of docketing of the application which states the purpose of the application and specifies the location at which the proposed activity would be conducted.

(e) The notice published in the Federal Register of docketing of the application for a facility operating license under section 104b of the Act will, when appropriate, also state that any person who intervened or sought, by timely written notice to the Commission or the Atomic Energy Commission, to intervene in the construction permit proceeding for the facility to obtain a determination of antitrust considerations or to advance a jurisdictional basis for such determination may, within twenty-five (25) days after the date of publication, submit a written petition for leave to intervene and a request for a hearing on the antitrust aspects of the application.

Hearing On Application—How Initiated

§ 2.104 Notice of hearing.

(a) In the case of an application on which a hearing is required by the Act or this chapter, or in which the Commission finds that a hearing is required in the public interest, the Secretary will issue a notice of hearing to be published in the Federal Register as required by law at last fifteen (15) days, and in the case of an application concerning a construction permit for a facility of the type described in § 50.21(b) or § 50.22 of this chapter or a testing facility, at least thirty (30) days, prior to the date set for hearing in the notice.[1] In addition, in the case of an application for a construction permit for a facility of the type described in § 50.22 of this chapter, or a testing facility, the notice (other than a notice pursuant to paragraph (d) of this section) shall be issued as soon as practicable after the application has been docketed: *Provided,* That if the Commission, pursuant to § 2.101(a)(2), decides to determine the acceptability of the application on the basis of its technical adequacy as well as completeness, the notice shall be issued as soon as practicable after the application has been tendered. The notice will state:

(1) The time, place, and nature of the hearing and/or prehearing conference, if any;

(2) The authority under which the hearing is to be held;

---

[1]If the notice of hearing concerning an application for a construction permit for a facility of the type described in § 50.21(b) or § 50.22 of this chapter or a testing facility does not specify the time and place of initial hearing, a subsequent notice will be published in the Federal Register which will provide at least thirty (30) days notice of the time and place of that hearing. After this notice is given the presiding officer may reschedule the commencement of the initial hearing for a later date or reconvene a recessed hearing without again providing thirty (30) days notice.

(3) The matters of fact and law to be considered; and

(4) The time within which answers to the notice shall be filed.

(b) In the case of an application for a construction permit for a facility on which the Act requires a hearing, the notice of hearing will, except as provided in paragraph (d) of this section and unless the Commission determines otherwise, state, in implementation of paragraph (a)(3) of this section:

(1) That, if the proceeding is a contested proceeding, the presiding officer will consider the following issues:[2]

(i) Whether in accordance with the provisions of § 50.35(a) of this chapter:

(*a*) The applicant has described the proposed design of the facility, including, but not limited to, the principal architectural and engineering criteria for the design, and has identified the major features or components incorporated therein for the protection of the health and safety of the public;

(*b*) Such further technical or design information as may be required to complete the safety analysis, and which can reasonably be left for later consideration will be supplied in the final safety analysis report;

(*c*) Safety features or components, if any, which require research and development, have been described by the applicant and the applicant has identified, and there will be conducted, a research and development program reasonably designed to resolve any safety questions associated with such features or components; and

---

[2]Issues (i) to (iv) are the issues pursuant to the Atomic Energy Act of 1954, as amended. Issue (v) is the issue pursuant to the National Environmental Policy Act of 1969.

(*d*) On the basis of the foregoing, there is reasonable assurance that (*1*) such safety questions will be satisfactorily resolved at or before the latest date stated in the application for completion of the proposed facility; and (*2*) taking into consideration the site criteria contained in Part 100 of this chapter, the proposed facility can be constructed and operated at the proposed location without undue risk to the health and safety of the public;

(ii) Whether the applicant is technically qualified to design and construct the proposed facility;

(iii) Whether the applicant is financially qualified to design and construct the proposed facility;

(iv) Whether the issuance of a permit for the construction of the facility will be inimical to the common defense and security or to the health and safety of the public;

(v) If the application is for a construction permit for a nuclear power reactor, a testing facility, a fuel reprocessing plant, or other facility whose construction or operation has been determined by the Commission to have a significant impact on the environment, whether, in accordance with the requirements of Part 51 of this chapter, the construction permit should be issued as proposed.

(2) That, if the proceeding is not a contested proceeding, the presiding officer will determine (i) without conducting a de novo evaluation of the application, whether the application and the record of the proceeding contain sufficient information, and the review of the application by the Commission's staff has been adequate to support affirmative findings on (b)(1)(i) through (iii) specified in this section and a negative finding on (b)(1)(iv) specified in this section proposed to be made and the issuance of the construction permit proposed by the Director of Nuclear Reactor Regulation or Director of Nuclear Material Safety or Safeguards,

as appropriate, and (ii) if the application is for a construction permit for a nuclear power reactor, a testing facility, a fuel reprocessing plant, or other facility whose construction or operation has been determined by the Commission to have a significant impact on the environment, whether the review conducted by the Commission pursuant to the National Environmental Policy Act (NEPA) has been adequate.

(3) That regardless of whether the proceeding is contested or uncontested, the presiding officer will, in accordance with Part 51 of this chapter,

(i) Determine whether the requirements of section 102(2) (A), (C) and (E) of the National Environmental Policy Act and Part 51 of this chapter have been complied with in the proceeding;

(ii) Independently consider the final balance among conflicting factors contained in the record of the proceeding with a view to determining the appropriate action to be taken; and

(iii) Determine whether the construction permit should be issued, denied, or appropriately conditioned to protect environmental values.

(c) In the case of an application for an operating license in which a hearing will be held, the notice of hearing will, except as provided in paragraph (d) of this section and unless the Commission determines otherwise, state, in implementation of paragraph (a)(3) of this section, that the presiding oficer will consider any matters in controversy among the parties and may, where he or she determines that a serious safety, environmental, or common defense and security matter has not been raised by the parties, consider such other matter within the purview of:

(1) Whether there is reasonable assurance that construction of the facility will be substantially completed on a

timely basis, in conformity with the construction permit and the application as amended, the provisions of the Act, and the regulation in this chapter;

(2) Whether the facility will operate in conformity with the application as amended, the provisions of the Act, and the regulations in this chapter;

(3) Whether there is reasonable assurance; (i) That the activities to be authorized by the operating license can be conducted without endangering the health and safety of the public, and (ii) that such activities will be conducted in compliance with the regulations in this chapter;

(4) Whether the applicant is technically and financially qualified to engage in the activities to be authorized by the operating license in accordance with the regulations in this chapter;

(5) Whether the applicable provisions of Part 140 of this chapter have been satisfied;

(6) Whether issuance of the license will be inimical to the common defense and security or to the health and safety of the public; and

(7) If the application is for an operating license for a nuclear power reactor, a testing facility, or a fuel reprocessing plant, or other facility whose operation has been determined by the Commission to have a significant impact on the environment, whether, in accordance with the requirements of Part 51 of this chapter, the operating license should be issued as proposed.[3]

(d) In the case of an application for a construction permit or an operating license for a facility on which a hearing is

---

[3]Issues (1) to (6) are the issues pursuant to the Atomic Energy Act of 1954, as amended. Issue (7) is the issue pursuant to the National Environmental Policy Act of 1969.

required by the Act or this chapter, or in which the Commission finds that a hearing is required in the public interest, for the consideration of the antitrust aspects of the application, the notice of hearing will, unless the Commission determines otherwise, state, in implementation of paragraph (a)(1) and (3) of this section,

(1) A time of the hearing, which will be as soon as practicable after the receipt of the Attorney General's advice and compliance with sections 105 and 189a of the Act and other provisions of this part;[4]

(2) That the presiding officer will consider the issue of whether or not the activities under the proposed license would create or maintain a situation inconsistent with the antitrust laws as specified in section 105a of the Act; and

(3) That matters of radiological health and safety and common defense and security, and matters raised under the National Environmental Policy Act of 1969, will be considered at another hearing for which a notice will be published pursuant to paragraphs (a) and (b) of this section, unless otherwise authorized by the Commission.

(e) The Secretary will give timely notice of the hearing to all parties and to other persons, if any, entitled by law

---

[4]As permitted by subsection 105c(8) of the Act, with respect to proceedings in which an application for a construction permit was filed prior to Dec. 19, 1970, and proceedings in which a written request for antitrust review of an application for an operating license to be issued under section 104b has been made by a person who intervened or sought by timely written notice to the Commission to intervene in the construction permit proceeding for the facility to obtain a determination of antitrust consideration or to advance a jurisdictional basis for such determination within 25 days after the date of publication in the Federal Register of notice of filing of the application for an operating license or Dec. 19, 1970, whichever is later, the Commission may issue a construction permit or operating license in advance of consideration of, and findings with respect to, the antitrust aspects of the application: *Provided*, That the permit or license so issued contains the conditions specified in § 50.55b of this chapter.

to notice. The Secretary will transmit a notice of hearing on an application for a facility license or for a license for receipt of waste radioactive material from other persons for the purpose of commercial disposal by the waste disposal licensee, to the Governor or other appropriate official of the State and to the chief executive of the municipality in which the facility is to be located or the activity is to be conducted or, if the facility is not to be located or the activity conducted within a municipality, to the chief executive of the county.

§ 8.4 Interpretation by the General Counsel: AEC jurisdiction over nuclear facilities and materials under the Atomic Energy Act.

(a) By virtue of the Atomic Energy Act of 1954, as amended,[11] the individual States may not, in the absence of an agreement with the Atomic Energy Commission, regulate the materials described in the Act from the standpoint of radiological health and safety. Even States which have entered into agreements with the AEC lack authority to regulate the facilities described in the Act, including nuclear power plants and the discharge of effluents from such facilities, from the standpoint of radiological health and safety.

(b) The Atomic Energy Act of 1954 sets out a pattern for licensing and regulation of certain nuclear materials and facilities on the basis of the common defense and security and radiological health and safety. The regulatory pattern requires, in general, that the construction and operation of production facilities (nuclear reactors used for production and separation of plutonium or uranium-233 or fuel reprocessing plants) and utilization facilities (nuclear reactors used for production of power, medical therapy, research,

[11]Public Law 83-703, 68 Stat. 919.

and testing) and the possession and use of byproduct material (radioisotopes), source material (thorium and uranium ores), and special nuclear material (enriched uranium and plutonium, used as fuel in nuclear reactors), be licensed and regulated by the Commission.[12] In carrying out its statutory responsibilities for the protection of the public health and safety from radiation hazards and for the promotion of the common defense and security, the AEC has promulgated regulations which establish requirements for the issuance of licenses (Parts 30-36, 40, 50, 70, 71, and 100 of this chapter) and specify standards for radiation protection (Part 20 of this chapter).

(c) The Atomic Energy Act of 1954 had the effect of preempting to the Federal Government the field of regulation of nuclear facilities and byproduct, source, and special nuclear material. Whatever doubts may have existed as to that preemption were settled by the passage of the Federal-State amendment to the Atomic Energy Act of 1954 in 1959.[13]

(d) Prior to 1954, all nuclear facilities and the special nuclear material produced by or used in them were owned by the AEC.[14] This Federal monopoly of atomic energy activities was due in large part to the use of atomic energy materials and facilities in our national weapons program, and the large capital investment required for their development. The Atomic Energy Act of 1954 permitted private ownership of nuclear facilities for the first time, but only under a comprehensive, pervasive system of Federal reg-

---

[12]The terms "byproduct material," "source material," and "special nuclear material" are defined in the Atomic Energy Act, sections 11e, 11z, and 11aa, respectively. The terms "production facility" and "utilization facility" are defined in sections 11v and 11cc of the Act, respectively.

[13]Public Law 86-373, 73 Stat. 688.

[14]Atomic Energy Act of 1946. Public Law 79-585, 60 Stat. 755.

ulation and licensing. That Act recognized no State responsibility or authority over such facilities and materials except the States' traditional regulatory authority over generation, sale, and transmission of electric power produced through the use of nuclear facilities.[15] As interest grew in the private construction of facilities and the use of atomic energy materials, and the numbers of persons qualified in the field increased, questions arose as to the role State authorities should play with regard to the public health and safety aspects of such activities. Several bills were introduced with respect to Federal-State cooperation in 1956 and 1957.[16] An AEC proposed bill which would have authorized concurrent radiation safety standards to be enforced by the States was forwarded to the Joint Committee on Atomic Energy in 1957, but was never reported out. Finally, in 1959, legislation was enacted whose purpose was to promote an orderly regulatory pattern between the Federal and State governments with respect to regulation of byproduct, source, and special nuclear material, while avoiding dual regulation (see section 274a). That legislation added section 274, the so-called Federal-State amendment, to the Atomic Energy Act.

(e) Section 274 (42 U.S.C. 2021) authorizes the Commission to enter into an agreement with the Governor of any State providing for the discontinuance of regulatory authority of the Commission with respect to byproduct materials, source materials, and special nuclear materials in quantities not sufficient to form a "critical mass." However, section 274c (42 U.S.C. 2021(c)) provides that the

---

[15]Section 271, 42 U.S.C. 2018.

[16]S. 4298 and H.R. 8676, 84th Cong., second session; S. 53, 85th Cong., first session.

Commission shall retain authority and responsibility with respect to the regulation of:

(1) The construction and operation of production or utilization facilities (note: this includes construction and operation of nuclear powerplants);

(2) The export and import of byproduct, source or special nuclear material or production or utilization facilities;

(3) The disposal into the ocean of waste byproduct, source or special nuclear materials; and

(4) The disposal of such other byproduct, source or special nuclear material as the Commission determines should, because of the hazards or potential hazards thereof, not be so disposed of without a Commission license.

(f) The amendment, in providing for the discontinuance of some of the AEC's regulatory authority over source, byproduct and special nuclear material in States which entered into agreements with the AEC, made clear that there should be no "dual regulation" with respect to those materials for the purpose of protection of the public health and safety from radiation hazards.

(g) Section 274b of the Atomic Energy Act (42 U.S.C. 2021(b)) states that:

> During the duration of such an agreement it is recognized that the State shall have authority to regulate the materials covered by the agreement for the protection of the public health and safety from radiation hazards.

Section 274k (42 U.S.C. 2021(k)) states:

> Nothing in this section shall be construed to affect the authority of any State or local agency to regulate activities for purposes other than protection against radiation hazards.

(h) In its comments on the bill that was enacted as section 274, the Joint Committee on Atomic Energy commented that:

> It is not intended to leave any room for the exercise of dual or concurrent jurisdiction by States to control radiation hazards by regulating byproduct, source, or special nuclear materials. The intent is to have the material regulated and licensed either by the Commission, or by the State and local governments, but not by both.[17]

In explaining section 274k, the Joint Committee said:

> As indicated elsewhere, the Commission has exclusive authority to regulate for protection against radiation hazards until such time as the State enters into an agreement with the Commission to assume such responsibility.[18]

(i) It seems completely clear that the Congress, in enacting section 274, intended to preempt to the Federal Government the total responsibility and authority for regulating, from the standpoint of radiological health and safety, the specified nuclear facilities and materials; that it stated that intent unequivocally; and that the enactment of section 274 effectively carried out the Congressional intent, subject to the arrangement for limited relinquishment of AEC's regulatory authority and assumption thereof by states in areas permitted, and subject to conditions imposed, by section 274.[19]

---

[17]1959 U.S. Code Congressional and Administrative News, v. 2, p. 2879.

[18]Id. at p. 2882-3.

[19]As noted above, regulation of construction and operation of production or utilization facilities was one of the areas reserved to the AEC. It is clear from the legislative history of section 274 that control of "operation" of such facilities includes the regulation of the radiological effects of the discharge of affluents from the facilities. (Hearings before the Joint Committee on Atomic Energy on Federal-State Relationships in the Atomic Energy Field, 86th Cong., first session, 1959, p. 306.) AEC regulations implementing section 274 recognize that intent by defining facility operation to include the discharge of radioactive effluents from the facility site (10 CFR 150.15).

(j) Thus, under the pattern of the Atomic Energy Act, as amended by section 274, States which have not entered into a section 274 agreement with the AEC are without authority to license or regulate, from the standpoint of radiological health and safety, byproduct, source, and special nuclear material or production and utilization facilities. Even those States which have entered into a section 274 agreement with the AEC (Agreement States) lack authority to license or regulate, from the standpoint of radiological health and safety, the construction and operation of production and utilization facilities (including nuclear power plants) and other activities reserved to the AEC by section 274c. (To the extent that Agreement States have authority to regulate byproduct, source, and special nuclear material, their section 274 Agreements require them to use their best efforts to assure that their regulatory programs for protection against radiation hazards will continue to be compatible with the AEC's program for the regulation of byproduct, source and special nuclear material.)

(k) The following judicial precedents and legal authorities support the foregoing conclusions: Northern California Ass'n, Etc. v. Public Utilities Commission, 37 Cal. Rep. 432, 390 P. 2d 200 (1964); Boswell v. City of Long Beach. CCH Atomic Energy Law Reports, par. 4045 (1960); Opinion of the Attorney General of Michigan (Oct. 31, 1962); Opinion of the Attorney General of South Dakota (July 23, 1964); New York State Bar Association, Committee on Atomic Energy, State Jurisdiction to Regulate Atomic Activities (July 12, 1963). No precedents or authorities to the contrary have come to our attention.

Requirement of License, Exceptions

§ 50.10 License required.

(a) Except as provided in § 50.11, no person within the United States shall transfer or receive in interstate commerce, manufacture, produce, transfer, acquire, possess,

or use any production or utilization facility except as authorized by a license issued by the Commission.

(b) No person shall begin the construction of a production or utilization facility on a site on which the facility is to be operated until a construction permit has been issued. As used in this paragraph, the term "construction" shall be deemed to include pouring the foundation for, or the installation of, any portion of the permanent facility on the site, but does not include:

(1) Site exploration, site excavation, preparation of the site for construction of the facility, including the driving of piles, and construction of roadways, railroad spurs, and transmission lines;

(2) Procurement or manufacture of components of the facility;

(3) Construction of non-nuclear facilities (such as turbogenerators and turbine buildings) and temporary buildings (such as construction equipment storage sheds) for use in connection with the construction of the facility; and

(4) With respect to production or utilization facilities, other than testing facilities, required to be licensed pursuant to section 104a or section 104c of the Act, the construction of buildings which will be used for activities other than operation of a facility and which may also be used to house a facility. (For example, the construction of a college laboratory building with space for installation of a training reactor is not affected by this paragraph.) This paragraph does not apply to production or utilization facilities subject to paragraph (c) of this section.

(c) Notwithstanding the provisions of paragraph (b) of this section, and subject to paragraphs (d) and (e) of this section, no person shall effect commencement of construction of a production or utilization facility subject to the

provisions of § 51.5(a) of this chapter on a site on which the facility is to be operated until a construction permit has been issued. As used in this paragraph, the term "commencement of construction" means any clearing of land, excavation or other substantial action that would adversely affect the environment of a site, but does not mean:

(1) Changes desirable for the temporary use of the land for public recreational uses, necessary borings to determine foundation conditions or other preconstruction monitoring to establish background information related to the suitability of the site or to the protection of environmental values;

(2) Procurement or manufacture of components of the facility; and

(3) With respect to production or utilization facilities, other than testing facilities, required to be licensed pursuant to section 104a or section 104c of the Act, the construction of buildings which will be used for activities other than operation of a facility and which may also be used to house a facility. (For example, the construction of a college laboratory building with space for installation of a training reactor is not affected by this paragraph.)

(d)(1) Each person subject to the provisions of paragraph (c) of this section, who is, on March 21, 1972, conducting activities permitted pursuant to paragraph (b) of this section in effect prior to March 21, 1972, may furnish to the Commission within 30 days after March 21, 1972 or such later date as may be approved by the Commission upon good cause shown, a written statement of any reasons, with supporting factual submission, why, with reference to the factors stated in paragraph (d)(2) of this section, the activities should be continued, pending the issuance of a construction permit, notwithstanding the provisions of paragraph (c) of this section. If such written statement has been

submitted, within the time specified, such activities may continue to be conducted pending Commission action pursuant to paragraph (d)(2) of this section.

(2) Upon submission of a statement of reasons pursuant to paragraph (d)(1) of this section the Commission may authorize the continued conduct of activities permitted by paragraph (b) of this section in effect prior to March 21, 1972, upon consideration and balancing of the following factors:

(i) Whether continuation of the activities will give rise to a significant adverse impact on the environment and the nature and extent of such impact, if any;

(ii) Whether redress of any adverse environmental impact from continuation of the activities can reasonably be effected should such redress be necessary;

(iii) Whether continuation of the activities would foreclose subsequent adoption of alternatives; and

(iv) The effect of delay in conducting such activities on the public interest, including the power needs to be served by the proposed facility, the availability of alternative sources, if any, to meet those needs on a timely basis, and delay costs to the applicant and to consumers.

(3) Activities permitted to be continued pursuant to this paragraph (d) shall be conducted in such a manner as will minimize or reduce their environmental impact.

(e)(1) The Director of Nuclear Reactor Regulation may authorize an applicant for a construction permit for a utilization facility which is subject to § 51.5(a) of this chapter, and is of the type specified in §§ 50.21(b) (2) or (3) or 50.22 or is a testing facility, to conduct the following activities: (i) Preparation of the site for construction of the facility (including such activities as clearing, grading, construction of temporary access roads and borrow areas); (ii)

installation of temporary construction support facilities (including such items as warehouse and shop facilities, utilities, concrete mixing plants, docking and unloading facilities, and construction support buildings); (iii) excavation for facility structures; (iv) construction of service facilities (including such facilities as roadways, paving, railroad spurs, fencing, exterior utility and lighting systems, transmission lines, and sanitary sewerage treatment facilities); and (v) the construction of structures, systems, and components which do not prevent or mitigate the consequences of postulated accidents that could cause undue risk to the health and safety of the public. No such authorization shall be granted unless the staff has completed a final environmental impact statement on the issuance of the construction permit as required by Part 51 of this chapter.

(2) Such an authorization shall be granted only after the presiding officer in the proceeding on the construction permit application (i) has made all the findings required by § 51.52 (b) and (c) of this chapter to be made prior to issuance of the construction permit for the facility, and (ii) has determined that, based upon the available information and review to date, there is reasonable assurance that the proposed site is a suitable location for a reactor of the general size and type proposed from the standpoint of radiological health and safety considerations under the Act and rules and regulations promulgated by the Commission pursuant thereto.

(3)(i) The Director of Nuclear Reactor Regulation may authorize an applicant for a construction permit for a utilization facility which is subject to § 51.5(a) of this chapter, and is of the type specified in §§ 50.21(b) (2) or (3) or 50.22 or is a testing facility, to conduct, in addition to the activities described in paragraph (e)(1) of this section, the installation of structural foundations, including any necessary subsurface preparation, for structures, systems and

components which prevent or mitigate the consequences of postulated accidents that could cause undue risk to the health and safety of the public.

(ii) Such an authorization, which may be combined with the authorization described in paragraph (e)(1) of this section, or may be granted at a later time, shall be granted only after the presiding officer in the proceeding on the construction permit application has, in addition to making the findings and determinations required by paragraph (e)(2) of this section, determined that there are no unresolved safety issues relating to the additional activities that may be authorized pursuant to this paragraph that would constitute good cause for withholding authorization.

(4) Any activities undertaken pursuant to an authorization granted under this paragraph shall be entirely at the risk of the applicant and, except as to matters determined under paragraphs (e)(2) and (e)(3)(ii), the grant of the authorization shall have no bearing on the issuance of a construction permit with respect to the requirements of the Act, and rules, regulations, or orders promulgated pursuant thereto.

Classification and Description of Licenses

§ 50.23 Construction permits.

A construction permit for the construction of a production or utilization facility will be issued prior to the issuance of a license if the application is otherwise acceptable, and will be converted upon due completion of the facility and Commission action into a license as provided in § 50.56 of this part. A construction permit for the alteration of a production or utilization facility will be issued prior to the issuance of an amendment of a license, if the application for amendment is otherwise acceptable, as provided in § 50.91.

Applications for Licenses, Form, Contents, Ineligibility of Certain Applicants

§ 50.30 Filing of applications for licenses; oath or affirmation.

(a) *Place of filing.* Each application for a license, including where appropriate a construction permit, or amendment thereof, and each amendment of such application, and correspondence, reports, or other written communications from the applicant to the Commission pertaining to such application, for a nuclear reactor, testing facility or other utilization facility, should be filed with the Director of Nuclear Reactor Regulation, U.S. Nuclear Regulatory Commission, Washington, D.C. 20555. Each application for a license, including where appropriate a construction permit, or amendment thereof, and each amendment of such application, and correspondence, reports, or other written communications from the applicant to the Commission pertaining to such application, for a fuel reprocessing plant or other production facility, should be filed with the Director of Nuclear Material Safety and Safeguards, U.S. Nuclear Regulatory Commission, Washington, D.C. 20555. Communications, reports, correspondence, and applications may be delivered in person at the Commission's offices at 1717 H Street NW., Washington, D.C. or at 7920 Norfolk Avenue, Bethesda, Maryland.

(b) *Oath or affirmation.* Each application for a license, including whenever appropriate a construction permit, or amendment thereof, and each amendment of such application should be executed in three signed originals by the applicant or duly authorized officer thereof under oath or affirmation.

(c) *Number of copies of application.* (1) Each filing of an application for a license to construct and operate a pro-

duction or utilization facility (including amendments to such applications) should include three signed originals and the following number of copies:

(i) For an application for a license for a facility described in § 50.21(b) or § 50.22, or a testing facility: Fifteen (15) copies of that portion of the application containing the information required by §§ 50.33 and 50.37 (general information) and forty (40) copies of that portion of the application containing any of the information required by §§ 50.34 and 50.34a (safety analysis report) except that sixty (60) copies shall be filed if such portion of the application is an amendment to the safety analysis report; an additional ten (10) copies of the general information and thirty (30) copies of the safety analysis report, or part thereof or amendment thereto, shall be retained by the applicant for distribution in accordance with the written instructions of the Director of Nuclear Reactor Regulation or Director of Nuclear Material Safety and Safeguards, as appropriate. The Director of Nuclear Reactor Regulation or Director of Nuclear Material Safety and Safeguards may request additional copies of applications and the safety analysis report where the design is of a unique nature or for applications submitted pursuant to this Part 50, Appendices M, N, and O.

(ii) For an application for an amendment to a license for a facility described in § 50.21(b) or 50.22, or a testing facility: Nineteen (19) copies of that portion of the application containing the information required by § 50.33 (general information) and 40 copies of that portion of the application containing the information required by §§ 50.34 and 50.34a (safety analysis report);

(iii) For an application for a license for any other facility, or an amendment to a license for such facility; Nineteen (19) copies of that portion of the application containing the information required by §§ 50.33 and 50.37 (general

information) and that portion of the application containing the information required by §§ 50.34 and 50.34a (safety analysis report);

(iv) For an application for a license for a production or utilization facility: Forty-one (41) copies of any applicant's environmental report required by Part 51 of this chapter.

(2) With respect to an application for a license described in paragraph (c)(1)(i) of this section, the applicant shall, upon notification by the atomic safety and licensing board appointed to conduct the public hearing required by the Atomic Energy Act for the issuance of a construction permit, update the application and serve such updated copies of the application or parts thereof, eliminating all superseded information, together with an index of the updated application, as directed by the atomic safety and licensing board. In addition, at that time the applicant shall serve one such copy on the Atomic Safety and Licensing Appeal Panel. Further, at the time the application is offered into evidence at the public hearing on the application, the applicant shall provide sufficient updated copies so that one may be served by the Office of the Secretary on the Atomic Safety and Licensing Appeal Panel. Any subsequent amendments to the application shall be served on those served copies of the application, and three signed originals and the specified number of copies of such amendments shall be filed with the Director of Nuclear Reactor Regulation or Director of Nuclear Material Safety and Safeguards, as appropriate as provided in paragraph (c)(1)(i) of this section. At the time of filing of such an application, one copy shall be made available in an appropriate office near the site of the proposed facility for inspection by the public and updated as amendments to the application prior to the public hearing may be made. This updated copy shall be produced at the public hearing for the use of any other parties to the proceeding. The

applicant shall certify that the updated copies of the application contain the current contents of the application submitted in accordance with the requirements of this part. The applicant shall also update and serve copies of the application and make available a copy of such updated application in an appropriate office near the site of the facility for inspection by the public at such time as the Commission may issue a notice of public hearing concerning the issuance of an operating license.

(3) The copies required by paragraphs (b) and (c)(1) and (2) of this section need not be filed until that part of the application has been assigned a docket number or docketed pursuant to § 2.101(a) of this chapter. The following number of copies shall be filed to enable the Director of Nuclear Reactor Regulation or Director of Nuclear Material Safety and Safeguards, as appropriate, to determine whether the application is sufficiently complete to permit the assignment of a docket number or docketing as appropriate.

(i) Fifteen (15) copies of that portion of the application containing any of the information required by §§ 50.34 and 50.34a (safety analysis report);

(ii) Ten (10) copies of that portion of the application containing the general information required by § 50.33; and

(iii) Twenty (20) copies of any environmental report required by Part 51 of this chapter.

(d) *Application for operating licenses.* The holder of a construction permit for a production or utilization facility shall, at the time of submission of the final safety analysis report, file an application for an operating license or an amendment to an application for a license to construct and operate a production or utilization facility for the issuance of an operating license, as appropriate. The application or amendment shall state the name of the applicant, the name,

location and power level, if any, of the facility and the time when the facility is expected to be ready for operation, and may incorporate by reference any pertinent information submitted in accordance with § 50.33 with the application for a construction permit.

(e) *Filing fees.* Each application for a production or utilization facility license, including, whenever appropriate, a construction permit, other than a license exempted from Part 170 of this chapter, shall be accompanied by the fee prescribed in Part 170 of this chapter. No fee will be required to accompany an application for renewal, amendment or termination of a construction permit or operating license, except as provided in § 170.21 of this chapter.

(f) *Environmental report.* An application for a construction permit or an operating license for a nuclear power reactor, testing facility, fuel reprocessing plant, or such other production or utilization facility whose construction or operation may be determined by the Commission to have a signficant impact on the environment shall be accompanied by any Environmental Report required pursuant to Part 51.

§ 50.34 Contents of applications; technical information.

(a) *Preliminary safety analysis report.* Each application for a construction permit shall include a preliminary safety analysis report. The minimum information [1a] to be included shall consist of the following:

(1) A description and safety assessment of the site on which the facility is to be located, with appropriate attention to features affecting facility design. Special attention should be directed to the site evaluation factors identified in Part

---

[1a] The applicant may provide information required by this paragraph in the form of a discussion, with specific references, of similarities to and differences from, facilities of similar design for which applications have previously been filed with the Commission

100 of this chapter. Such assessment shall contain an analysis and evaluation of the major structures, systems and components of the facility which bear significantly on the acceptability of the site under the site evaluation factors identified in Part 100 of this chapter, assuming that the facility will be operated at the ultimate power level which is contemplated by the applicant. With respect to operation at the projected initial power level, the applicant is required to submit information prescribed in paragraphs (a)(2) through (8) of this section, as well as the information required by this paragraph, in support of the application for a construction permit.

(2) A summary description and discussion of the facililty, with special attention to design and operating characteristics, unusual or novel design features, and principal safety considerations.

(3) The preliminary design of the facility including:

(i) The principal design criteria for the facility.[2] Appendix A, General Design Criteria for Nuclear Power Plants, establishes minimum requirements for the principal design criteria for water-cooled nuclear power plants similar in design and location to plants for which construction permits have previously been issued by the Commission and provides guidance to applicants for construction permits in establishing principal design criteria for other types of nuclear power units;

(ii) The design bases and the relation of the design bases to the principal design criteria;

(iii) information relative to materials of construction, general arrangement and approximate dimensions, sufficient

---

[2]General design criteria for chemical processing facilities are being developed.

to provide reasonable assurance that the final design will conform to the design bases with adequate margin for safety.

(4) A preliminary analysis and evaluation of the design and performance of structures, systems, and components of the facility with the objective of assessing the risk to public health and safety resulting from operation of the facility and including determination of (i) the margins of safety during normal operations and transient conditions anticipated during the life of the facility, and (ii) the adequacy of structures, systems, and components provided for the prevention of accidents and the mitigation of the consequences of accidents. Analysis and evaluation of ECCS cooling performance following postulated loss-of-coolant accidents shall be performed in accordance with the requirements of § 50.46 of this part for facilities for which construction permits may be issued after December 28, 1974.

(5) An identification and justification for the selection of those variables, conditions, or other items which are determined as the result of preliminary safety analysis and evaluation to be probable subjects of technical specifications for the facility, with special attention given to those items which may significantly influence the final design: *Provided, however*, That this requirement is not applicable to an application for a construction permit filed prior to January 16, 1969.

(6) A preliminary plan for the applicant's organization, training of personnel, and conduct of operations.

(7) A description of the quality assurance program to be applied to the design, fabrication, construction, and testing of the structures, systems, and components of the facility. Appendix B, "Quality Assurance Criteria for Nuclear Power Plants and Fuel Reprocessing Plants," sets forth the

requirements for quality assurance programs for nuclear power plants and fuel reprocessing plants. The description of the quality assurance program for a nuclear power plant or a fuel reprocessing plant shall include a discussion of how the applicable requirements of Appendix B will be satisfied.

(8) An identification of those structures, systems, or components of the facility, if any, which require research and development to confirm the adequacy of their design; and identification and description of the research and development program which will be conducted to resolve any safety questions associated with such structures, systems or components; and a schedule of the research and development program showing that such safety questions will be resolved at or before the latest date stated in the application for completion of construction of the facility.

(9) The technical qualifications of the applicant to engage in the proposed activities in accordance with the regulations in this chapter.

(10) A discussion of the applicant's preliminary plans for coping with emergencies. Appendix E sets forth items which shall be included in these plans.

(11) On or after February 5, 1979, applicants who apply for construction permits for nuclear powerplants to be built on multiunit sites shall identify potential hazards to the structures, systems and components important to safety of operating nuclear facilities from construction activities. A discussion shall also be included of any managerial and administrative controls that will be used during construction to assure the safety of the operating unit.

(b) *Final safety analysis report.* Each application for a license to operate a facility shall include a final safety analysis report. The final safety analysis report shall include

information that describes the facility, presents the design bases and the limits on its operation, and presents a safety analysis of the structures, systems, and components and of the facility as a whole, and shall include the following:

(1) All current information, such as the results of environmental and meteorological monitoring programs, which has been developed since issuance of the construction permit, relating to site evaluation factors identified in Part 100 of this chapter.

(2) A description and analysis of the structures, systems, and components of the facility, with emphasis upon performance requirements, the bases, with technical justification therefor, upon which such requirements have been established, and the evaluations required to show that safety functions will be accomplished. The description shall be sufficient to permit understanding of the system designs and their relationship to safety evaluations.

(i) For nuclear reactors, such items as the reactor core, reactor coolant system, instrumentation and control systems, electrical systems, containment systems, other engineered safety features, auxiliary and emergency systems, power conversion systems, radioactive waste handling systems, and fuel handling systems shall be discussed insofar as they are pertinent.

(ii) For facilities other than nuclear reactors, such items as the chemical, physical, metallurgical, or nuclear process to be performed, instrumentation and control systems, ventilation and filter systems, electrical systems, auxiliary and emergency systems, and radioactive waste handling systems shall be discussed insofar as they are pertinent.

(3) The kinds and quantities of radioactive materials expected to be produced in the operation and the means for controlling and limiting radioactive effluents and radiation

exposures within the limits set forth in Part 20 of this chapter.

(4) A final analysis and evaluation of the design and performance of structures, systems, and components with the objective stated in paragraph (a)(4) of this section and taking into account any pertinent information developed since the submittal of the preliminary safety analysis report. Analysis and evaluation of ECCS cooling performance following postulated loss-of-coolant accidents shall be performed in accordance with the requirements of § 50.46 for facilities for which a license to operate may be issued after December 28, 1974.

(5) A description and evaluation of the results of the applicant's programs, including research and development, if any, to demonstrate that any safety questions identified at the construction permit stage have been resolved.

(6) The following information concerning facility operation:

(i) The applicant's organizational structure, allocations or [*sic*] responsibilities and authorities, and personnel qualifications requirements.

(ii) Managerial and administrative controls to be used to assure safe operation. Appendix B, "Quality Assurance Criteria for Nuclear Power Plants and Fuel Reprocessing Plants," sets forth the requirements for such controls for nuclear power plants and fuel reprocessing plants. The information on the controls to be used for a nuclear power plant or a fuel reprocessing plant shall include a discussion of how the applicable requirements of Appendix B will be satisfied.

(iii) Plans for preoperational testing and initial operations.

(iv) Plans for conduct of normal operations, including maintenance, surveillance, and periodic testing of structures, systems, and components.

(v) Plans for coping with emergencies, which shall include the items specified in Appendix E.

(vi) Proposed technical specifications prepared in accordance with the requirements of § 50.36.

(vii) On or after February 5, 1979, applicants who apply for operating licenses for nuclear powerplants to be operated on multiunit sites shall include an evaluation of the potential hazards to the structures, systems, and components important to safety of operating units resulting from construction activities, as well as a description of the managerial and administrative controls to be used to provide assurance that the limiting conditions for operation are not exceeded as a result of construction activities at the multiunit sites.

(7) The technical qualifications of the applicant to engage in the proposed activities in accordance with the regulations in this chapter.

(8) A description and plans for implementation of an operator requalification program. The operator requalification program shall, as a minimum, meet the requirements for those programs contained in Appendix A of Part 5 of this chapter.

(c) Physical security plan. Each application for a license to operate a production or utilization facility shall include a physical security plan. The plan shall consist of two parts. Part I shall address vital equipment, vital areas, and isolation zones, and shall demonstrate how the applicant plans to comply with the requirements of Part 73 of this chapter, if applicable, at the proposed facility.[4] Part II shall list tests,

---

[4]Regulatory Guide 1.17 dated June 1973 describes physical security criteria generally acceptable for the protection of nuclear power reactors against acts of industrial sabotage.

inspections, and other means to be used to demonstrate compliance with such requirements, if applicable.

(d) *Safeguards contingency plan.* Each application for a license to operate a production or utilization facility that shall be subject to §§ 73.50, 73.55, or 73.60 of this chapter shall include a licensee safeguards contingency plan in accordance with the criteria set forth in Appendix C to 10 CFR Part 73. The safeguards contingency plan shall include plans for dealing with threats, thefts, and industrial sabotage, as defined in Part 73 of this chapter, relating to the special nuclear material and nuclear facilities licensed under this chapter and in the applicant's possession and control. Each application for such a license shall include the first four categories of information contained in the applicant's safeguards contingency plan. (The first four categories of information, as set forth in Appendix C to 10 CFR Part 73, are Background, Generic Planning Base, Licensee Planning Base, and Responsibility Matrix. The fifth category of information, Procedures, does not have to be submitted for approval.)[5]

§ 50.35 Issuance of construction permits.[1]

(a) When an applicant has not supplied initially all of the technical information required to complete the application and support the issuance of a construction permit which approves all proposed design features, the Commission may issue a construction permit if the Commission finds that (1) the applicant has described the proposed design of the

---

[5]A physical security plan that contains all the information required in both § 73.55 and Appendix C to Part 73 satisfies the requirement for a contingency plan.

[1]The commission may issue a provisional construction permit pursuant to the regulations in this part in effect on March 30, 1970, for any facility for which a notice of hearing on an application for a provisional construction permit has been published on or before that date.

facility, including, but not limited to, the principal architectural and engineering criteria for the design, and has identified the major features or components incorporated therein for the protection of the health and safety of the public; (2) such further technical or design information as may be required to complete the safety analysis, and which can reasonably be left for later consideration, will be supplied in the final safety analysis report; (3) safety features or components, if any, which require research and development have been described by the applicant and the applicant has identified, and there will be conducted, a research and development program reasonably designed to resolve any safety questions associated with such features or components; and that (4) on the basis of the foregoing, there is reasonable assurance that, (i) such safety questions will be satisfactorily resolved at or before the latest date stated in the application for completion of construction of the proposed facility, and (ii) taking into consideration the site criteria contained in Part 100 of this chapter, the proposed facility can be constructed and operated at the proposed location without undue risk to the health and safety of the public.

NOTE: When an applicant has supplied initially all of the technical information required to complete the application, including the final design of the facility, the findings required above will be appropriately modified to reflect that fact.

(b) A construction permit will constitute an authorization to the applicant to proceed with construction but will not constitute Commission approval of the safety of any design feature or specification unless the applicant specifically requests such approval and such approval is incorporated in the permit. The applicant, at his option, may request such approvals in the construction permit or, from time to time,

by amendment of his construction permit. The Commission may, in its discretion, incorporate in any construction permit provisions requiring the applicant to furnish periodic reports of the progress and results of research and development programs designed to resolve safety questions.

(c) Any construction permit will be subject to the limitation that a license authorizing operation of the facility will not be used by the Commission until (1) the applicant has submitted to the Commission, by amendment to the application, the complete final safety analysis report, portions of which may be submitted and evaluated from time to time, and (2) the Commission has found that the final design provides reasonable assurance that the health and safety of the public will not be endangered by operation of the facility in accordance with the requirements of the license and the regulations in this chapter.

§ 50.36 Technical specifications.

(a) Each applicant for a license authorizing operation of a production or utilization facility shall include in his application proposed technical specifications in accordance with the requirements of this section. A summary statement of the bases or reasons for such specifications, other than those covering administrative controls, shall also be included in the application, but shall not become part of the technical specifications.

(b) Each license authorizing operation of a production or utilization facility of a type described in § 50.21 or § 50.22 will include technical specifications. The technical specifications will be derived from the analyses and evaluation included in the safety analysis report, and amendments thereto, submitted pursuant to § 50.34. The Commission may include such additional technical specifications as the Commission finds appropriate.

(c) Technical specifications will include items in the following categories:

(1) *Safety limits, limiting safety system settings, and limiting control settings.* (i)(A) Safety limits for nuclear reactors are limits upon important process variables which are found to be necessary to reasonably protect the integrity of certain of the physical barriers which guard against the uncontrolled release of radioactivity. If any safety limit is exceeded, the reactor shall be shut down. The licensee shall notify the Commission, review the matter and record the results of the review, including the cause of the condition and the basis for corrective action taken to preclude reoccurrence. Operation shall not be resumed until authorized by the Commission.

(B) Safety limits for fuel reprocessing plants are those bounds within which the process variables must be maintained for adequate control of the operation and which must not be exceeded in order to protect the integrity of the physical system which is designed to guard against the uncontrolled release of radioactivity. If any safety limit for a fuel reprocessing plant is exceeded, corrective action shall be taken as stated in the technical specification or the affected part of the process, or the entire process if required, shall be shut down, unless such action would further reduce the margin of safety. The licensee shall notify the Commission, review the matter and record the results of the review, including the cause of the condition and the basis for corrective action taken to preclude reoccurrence. If a portion of the process or the entire process has been shut down, operation shall not be resumed until authorized by the Commission.

(ii)(A) Limiting safety system settings for nuclear reactors are settings for automatic protective devices related to those variables having significant safety functions. Where

a limiting safety system setting is specified for a variable on which a safety limit has been placed, the setting shall be so chosen that automatic protective action will correct the abnormal situation before a safety limit is exceeded. If, during operation, the automatic safety system does not function as required, the licensee shall take appropriate action, which may include shutting down the reactor. He shall notify the Commission, review the matter and record the results of the review, including the cause of the condition and the basis for corrective action taken to preclude reoccurrence.

(B) Limiting control settings for fuel reprocessing plants are settings for automatic alarm or protective devices related to those variables having significant safety functions. Where a limiting control setting is specified for a variable on which a safety limit has been placed, the setting shall be so chosen that protective action, either automatic or manual, will correct the abnormal situation before a safety limit is exceeded. If, during operation, the automatic alarm or protective devices do not function as required, the licensee shall take appropriate action to maintain the variables within the limiting control-setting values and to repair promptly the automatic devices or to shut down the affected part of the process and, if required, to shut down the entire process for repair of automatic devices. The licensee shall notify the Commission, review the matter, and record the results of the review, including the cause of the condition and the basis for corrective action to preclude reoccurrence.

(2) *Limiting conditions for operation*. Limiting conditions for operation are the lowest functional capability or performance levels of equipment required for safe operation of the facility. When a limiting condition for operation of a nuclear reactor is not met, the licensee shall shut down the reactor or follow any remedial action permitted by the technical specification until the condition can be met. When

a limiting condition for operation of any process step in the system of a fuel reprocessing plant is not met, the licensee shall shut down that part of the operation or follow any remedial action permitted by the technical specification until the condition can be met. In the case of either a nuclear reactor or a fuel reprocessing plant, the licensee shall notify the Commission, review the matter, and record the results of the review, including the cause of the condition and the basis for corrective action taken to preclude reoccurrence.

(3) *Surveillance requirements*. Surveillance requirements are requirements relating to test, calibration, or inspection to assure that the necessary quality of systems and components is maintained, that facility operation will be within the safety limits, and that the limiting conditions of operation will be met.

(4) *Design features*. Design features to be included are those features of the facility such as materials of construction and geometric arrangements, which, if altered or modified, would have a significant effect on safety and are not covered in categories described in paragraphs (c) (1), (2), and (3) of this section.

(5) *Administrative controls*. Administrative controls are the provisions relating to organization and management, procedures, recordkeeping, review and audit, and reporting necessary to assure operation of the facility in a safe manner.

(d)(1) This section shall not be deemed to modify the technical specifications included in any license issued prior to January 16, 1969. A license in which technical specifications have not been designated shall be deemed to include the entire safety analysis report as technical specifications.

(2) An applicant for a license authorizing operation of a production or utilization facility to whom a construction permit has been issued prior to January 16, 1969, may

submit technical specifications in accordance with this section, or in accordance with the requirements of this part in effect prior to January 16, 1969.

(3) At the initiative of the Commission or the licensee, any license may be amended to include technical specifications of the scope and content which would be required if a new license were being issued.

Issuance, Limitations, and Conditions of Licenses and Construction Permits.

§ 50.50 Issuance of licenses and construction permits.

Upon determination that an application for a license meets the standards and requirements of the act and regulations, and that notifications, if any, to other agencies or bodies have been duly made, the Commission will issue a license, or if appropriate a construction permit, in such form and containing such conditions and limitations including technical specifications, as it deems appropriate and necessary.

§ 50.55 Conditions of construction permits.

Each construction permit shall be subject to the following terms and conditions:

(a) The permit shall state the earliest and latest dates for completion of the construction or modification.

(b) If the proposed construction or modification of the facility is not completed by the latest completion date, the permit shall expire and all rights thereunder shall be forfeited: *Provided, however,* That upon good cause shown the Commission will extend the completion date for a reasonable period of time. The Commission will recognize, among other things, developmental problems attributable to the experimental nature of the facility or fire, flood, explosion, strike, sabotage, domestic violence, enemy action, an act of the elements, and other acts beyond the

control of the permit holder, as a basis for extending the completion date.

(c) Except as modified by this section and § 50.55a, the construction permit shall be subject to the same conditions to which a license is subject.

(d) At or about the time of completion of the construction or modification of the facility, the applicant will file any additional information needed to bring the original application for license up to date, and will file an application for an operating license or an amendment to an application for a license to construct and operate the facility for the issuance of an operating license, as appropriate, as specified in § 50.30(d) of this part.

(e)(1) If the permit is for construction of a nuclear power plant, the holder of the permit shall notify the Commission of each deficiency found in design and construction, which, were it to have remained uncorrected, could have affected adversely the safety of operations of the nuclear power plant at any time throughout the expected lifetime of the plant, and which represents:

(i) A significant breakdown in any portion of the quality assurance program conducted in accordance with the requirements of Appendix B to this part; or

(ii) A significant deficiency in final design as approved and released for construction such that the design does not conform to the criteria and bases stated in the safety analysis report or construction permit; or

(iii) A significant deficiency in construction of or significant damage to a structure, system, or component which will require extensive evaluation, extensive redesign, or extensive repair to meet the crtiteria and bases stated in the safety analysis report or construction permit or to otherwise

establish the adequacy of the structure, system, or component to perform its intended safety function; or

(iv) A significant deviation from performance specifications which will require extension evaluation, extensive redesign, or extensive repair to establish the adequacy of a structure, system, or component to meet the criteria and bases stated in the safety analysis report or construction permit or to otherwise establish the adequacy of the structure, system, or component to perform its intended safety function.

(2) The holder of a construction permit shall within 24 hours notify the appropriate Nuclear Regulatory Commission Inspection and Enforcement Regional Office of each reportable deficiency.

(3) The holder of a construction permit shall also submit a written report on a reportable deficiency within thirty (30) days to the appropriate NRC Regional Office shown in Appendix D of Part 20 of this chapter. Copies of such report shall be sent to the Director of Inspection and Enforcement, U.S. Nuclear Regulatory Commission, Washington, D.C. 20555. The report shall include a description of the deficiency, an analysis of the safety implications and the corrective action taken, and sufficient information to permit analysis and evaluation of the deficiency and of the corrective action. If sufficient information is not available for a definitive report to be submitted within 30 days, an interim report containing all available information shall be filed, together with a statement as to when a complete report will be filed.

(4) Remedial action may be taken both prior to and after notification of the Division of Inspection and Enforcement subject to the risk of subsequent disapproval of such action by the Commission.

§ 50.56 Conversion of construction permit to license; or amendment of license.

Upon completion of the construction or alteration of a facility, in compliance with the terms and conditions of the construction permit and subject to any necessary testing of the facility for health or safety purposes, the Commission will, in the absence of good cause shown to the contrary issue a license of the class for which one construction permit was issued or an appropriate amendment of the license as the case may be.

§ 50.57 Issuance of operating license.[1]

(a) Pursuant to § 50.56, an operating license may be issued by the Commission, up to the full term authorized by § 50.51, upon finding that:

(1) Construction of the facility has been substantially completed, in conformity with the construction permit and the application as amended, the provisions of the Act, and the rules and regulations of the Commission; and

(2) The facility will operate in conformity with the application as amended, the provisions of the Act, and the rules and regulations of the Commission; and

(3) There is reasonable assurance (i) that the activities authorized by the operating license can be conducted without endangering the health and safety of the public, and (ii) that such activities will be conducted in compliance with the regulations in this chapter; and

---

[1]The Commission may issue a provisional operating license pursuant to the regulations in this part in effect on March 30, 1970, for any facility for which a notice of hearing on an application for a provisional operating license or a notice of proposed issuance of a provisional operating license has been published on or before that date.

(4) The applicant is technically and financially qualified to engage in the activities authorized by the operating license in accordance with the regulations in this chapter; and

(5) The applicable provisions of Part 140 of this chapter have been satisfied; and

(6) The issuance of the license will not be inimical to the common defense and security or to the health and safety of the public.

(b) Each operating license will include appropriate provisions with respect to any uncompleted items of construction and such limitations or conditions as are required to assure that operation during the period of the completion of such items will not endanger public health and safety.

(c) An applicant may, in a case where a hearing is held in connection with a pending proceeding under this section make a motion in writing, pursuant to this paragraph (c), for an operating license authorizing low-power testing (operation at not more than 1 percent of full power for the purpose of testing the facility), and further operations short of full power operation. Action on such a motion by the presiding officer shall be taken with due regard to the rights of the parties to the proceedings, including the right of any party to be heard to the extent that his contentions are relevant to the activity to be authorized. Prior to taking any action on such a motion which any party opposes, the presiding officer shall make findings on the matters specified in paragraph (a) of this section as to which there is a controversy, in the form of an initial decision with respect to the contested activity sought to be authorized. The Director of Nuclear Reactor Regulation will make findings on all other matters specified in paragraph (a) of this section. If no party opposes the motion, the presiding officer will issue an order pursuant to § 2.730(e) of this chapter, authorizing

the Director of Nuclear Reactor Regulation to make appropriate findings on the matters specified in paragraph (a) of this section and to issue a license for the requested operation.

§ 50.58 Hearings and report of the Advisory Committee on Reactor Safeguards.

(a) Each application for a construction permit or an operating license for a facility which is of a type described in § 50.21(b) or § 50.22, or for a testing facility, shall be referred to the Advisory Committee on Reactor Safeguards for a review and report. An application for an amendment to such a construction permit or operating license may be referred to the Advisory Committee on Reactor Safeguards for review and report. Any report shall be made part of the record of the application and available to the public, except to the extent that security classification prevents disclosure.

(b) The Commission will hold a hearing after at least 30 days' notice and publication once in the Federal Register on each application for a construction permit for a production or utilization facility which is of a type described in § 50.21(b) or § 50.22 or which is a testing facility. When a construction permit has been issued for such a facility following the holding of a public hearing and an application is made for an operating license or for an amendment to a construction permit or operating license, the Commission may hold a hearing after at least 30 days' notice and publication once in the Federal Register or, in the absence of a request therefor by any person whose interest may be affected, may issue an operating license or an amendment to a construction permit or operating license without a hearing, upon 30 days' notice and publication once in the Federal Register of its intent to do so. If the Commission finds that no significant hazards consideration is presented by an ap-

plication for amendment to a construction permit or operating license, it may dispense with such notice and publication and may issue the amendment.

Inspections, Records, Reports, Notifications

§ 50.70 Inspections.

(a) Each licensee and each holder of a construction permit shall permit inspection, by duly authorized representatives of the Commission, of his records, premises, activities, and of licensed materials in possession or use, related to the license or construction permit as may be necessary to effectuate the purposes of the act, including section 105 of the Act.

(b)(1) Each licensee and each holder of a construction permit shall upon request by the Director, Office of Inspection and Enforcement, provide rent-free office space for the exclusive use of the Commission inspection personnel. Heat, air conditioning, light, electrical outlets and janitorial services shall be furnished by each licensee and each holder of a construction permit. The office shall be convenient to and have full access to the facility and shall provide the inspector both visual and acoustic privacy.

(2) For a site with a single power reactor or fuel facility licensed pursuant to Part 50, the space provided shall be adequate to accommodate a full-time inspector, a part-time secretary and transient NRC personnel and will be generally commensurate with other office facilities at the site. A space of 250 square feet either within the site's office complex or in an office trailer or other on site space is suggested as a guide. For sites containing multiple power reactor units or fuel facilities, additional space may be requested to accommodate additional full-time inspector(s). The office space that is provided shall be subject to the approval of the Director, Office of Inspection and Enforcement. All

furniture, supplies and communication equipment will be furnished by the Commission.

(3) The licensee or construction permit holder shall afford any NRC resident inspector assigned to that site, or other NRC inspectors indentified by the Regional Director as likely to inspect the facility, immediate unfettered access, equivalent to access provided regular plant employees, following power identification and compliance with applicable access control measures for security, radiological protection and personal safety.

Revocation, Suspension, Modification, Amendment of Licenses and Construction Permits, Emergency Operations by the Commission

§ 50.100 Revocation, suspension, modification of licenses and construction permits for cause.

A license or construction permit may be revoked, suspended, or modified, in whole or in part, for any material false statement in the application for license or in the supplemental or other statement of fact required of the applicant; or because of conditions revealed by the application for license or statement of fact or any report, record, inspection, or other means, which would warrant the Commission to refuse to grant a license on an original application (other than those relating to §§ 50.51, 50.42(a), and 50.43(b) of this part); or for failure to construct or operate a facility in accordance with the terms of the construction permit or license, provided that failure to make timely completion of the proposed construction or alteration of a facility under a construction permit shall be governed by the provisions of § 50.55(b); or for violation of, or failure to observe, any of the terms and provisions of the act, regulations, license, permit, or order of the Commission.

Part 50

Appendix B — Quality Assurance Criteria for Nuclear Power Plants and Fuel Reprocessing Plants

Introduction. Every applicant for a construction permit is required by the provisions of § 50.34 to include in its preliminary safety analysis report a description of the quality assurance program to be applied to the design, fabrication, construction, and testing of the structures, systems, and components of the facility. Every applicant for an operating license is required to include, in its final safety analysis report, information pertaining to the managerial and administrative controls to be used to assure safe operation. Nuclear power plants and fuel reprocessing plants include structures, systems, and components that prevent or mitigate the consequences of postulated accidents that could cause undue risk to the health and safety of the public. This appendix establishes quality assurance requirements for the design, construction, and operation of those structures, systems, and components. The pertinent requirements of this appendix apply to all activities affecting the safety-related functions of those structures, systems, and components; these activities include designing, purchasing, fabricating, handling, shipping, storing, cleaning, erecting, installing, inspecting, testing, operating, maintaining, repairing, refueling, and modifying.

As used in this appendix, "quality assurance" comprises all those planned and systematic actions necessary to provide adequate confidence that a structure, system, or component will perform satisfactorily in service. Quality assurance includes quality control, which comprises those quality assurance actions related to the physical characteristics of a

material, structure, component, or system which provide a means to control the quality of material, structure, component, or system to predetermined requirements.

I. Organization

The applicant[1] shall be responsible for the establishment and execution of the quality assurance program. The applicant may delegate to others, such as contractors, agents, or consultants, the work of establishing and executing the quality assurance program, or any part thereof, but shall retain responsibility therefor. The authority and duties of persons and organizations performing activities affecting the safety-related functions of structures, systems, and components shall be clearly established and delineated in writing. These activities include both the performing functions of attaining quality objectives and the quality assurance functions. The quality assurance functions are those of (a) assuring that an appropriate quality assurance program is established and effecively executed and (b) verifying, such as by checking, auditing, and inspection, that activities affecting the safety-related functions have been correctly performed. The persons and organizations performing quality assurance functions shall have sufficient authority and organizational freedom to identify quality problems; to initiate, recommend, or provide solutions; and to verify implementation of solutions. Such persons and organizations performing quality assurance functions shall report to a management level such that this required authority and organizational freedom, including sufficient independence

---

[1]While the term "applicant" is used in these criteria, the requirements are, of course, applicable after such a person has received a license to construct and operate a nuclear powerplant or a fuel reprocessing plant. These criteria will also be used for guidance in evaluating the adequacy of quality assurance programs in use by holders of construction permits and operating licenses.

from cost and schedule when opposed to safety considerations, are provided. Because of the many variables involved, such as the number of personnel, the type of activity being performed, and the location or locations where activities are performed, the organizational structure for executing the quality assurance program may take various forms provided that the persons and organizations assigned the quality assurance functions have this required authority and organizational freedom. Irrespective of the organizational structure, the individual(s) assigned the responsibility for assuring effective execution of any portion of the quality assurance program at any location where activities subject to this appendix are being performed shall have direct access to such levels of management as may be necessary to perform this function.

II. Quality Assurance Program

The applicant shall establish at the earliest practicable time, consistent with the schedule for accomplishing the activities, a quality assurance program which complies with the requirements of this appendix. This program shall be documented by written policies, procedures, or instructions and shall be carried out throughout plant life in accordance with those policies, procedures, or instructions. The applicant shall identify the structures, systems, and components to be covered by the quality assurance program and the major organizations participating in the program, together with the designated functions of these organizations. The quality assurance program shall provide control over activities affecting the quality of the identified structures, systems, and components, to an extent consistent with their importance to safety. Activities affecting quality shall be accomplished under suitably controlled conditions. Controlled conditions include the use of appropriate equipment;

suitable environmental conditions for accomplishing the activity, such as adequate cleanness; and assurance that all prerequisites for the given activity have been satisfied. The program shall take into account the need for special controls, processes, test equipment, tools, and skills to attain the required quality, and the need for verification of quality by inspection and test. The program shall provide for indoctrination and training of personnel performing activities affecting quality as necessary to assure that suitable proficiency is achieved and maintained. The applicant shall regularly review the status and adequacy of the quality assurance program. Management of other organizations participating in the quality assurance program shall regularly review the status and adequacy of that part of the quality assurance program which they are executing.

III. Design Control

Measures shall be established to assure that applicable regulatory requirements and the design basis, as defined in § 50.2 and as specified in the license application, for those structures, systems, and components to which this appendix applies are correctly translated into specifications, drawings, procedures, and instructions. These measures shall include provisions to assure that appropriate quality standards are specified and included in design documents and that deviations from such standards are controlled. Measures shall also be established for the selection and review for suitability of application of materials, parts, equipment, and processes that are essential to the safety-related functions of the structures, systems and components.

Measures shall be established for the identification and control of design interfaces and for coordination among participating design organizations. These measures shall include the establishment of procedures among participating

design organizations for review, approval, release, distribution, and revision of documents involving design interfaces.

The design control measures shall provide for verifying or checking the adequacy of design, such as by the performance of design reviews, by the use of alternate or simplified calculational methods, or by the performance of a suitable testing program. The verifying or checking process shall be performed by individuals or groups other than those who performed the original design, but who may be from the same organization. Where a test program is used to verify the adequacy of a specific design feature in lieu of other verifying or checking processes, it shall include suitable qualifications testing of a prototype unit under the most adverse design conditions. Design control measures shall be applied to items such as the following: reactor physics, stress, thermal, hydraulic, and accident analyses; compatibility of materials; accessibility for inservice inspection, maintenance, and repair; and delineation of acceptance criteria for inspections and tests.

Design changes, including field changes, shall be subject to design control measures commensurate with those applied to the original design and be approved by the organization that performed the original design unless the applicant designates another responsible organization.

IV. Procurement Document Control

Measures shall be established to assure that applicable regulatory requirements, design bases, and other requirements which are necessary to assure adequate quality are suitably included or referenced in the documents for procurement of material, equipment, and services, whether purchased by the applicant or by its contractors or subcontractors. To the extent necessary, procurement documents

shall require contractors or subcontractors to provide a quality assurance program consistent with the pertinent provisions of this appendix.

V. Instructions, Procedures, and Drawings

Activities affecting quality shall be prescribed by documented instructions, procedures, or drawings, of a type appropriate to the circumstances and shall be accomplished in accordance with these instructions, procedures, or drawings. Instructions, procedures, or drawings shall include appropriate quantitative or qualitative acceptance criteria for determining that important activities have been satisfactorily accomplished.

VI. Document Control

Measures shall be established to control the issuance of documents, such as instructions, procedures, and drawings, including changes thereto, which prescribe all activities affecting quality. These measures shall assure that documents, including changes, are reviewed for adequacy and approved for release by authorized personnel and are distributed to and used at the location where the prescribed activity is performed. Changes to documents shall be reviewed and approved by the same organizations that performed the original review and approval unless the applicant designates another responsible organization.

VII. Control of Purchased Material, Equipment, and Services

Measures shall be established to assure that purchased material, equipment, and services, whether purchased directly or through contractors and subcontractors, conform to the procurement documents. These measures shall include provisions, as appropriate, for source evaluation and selection, objective evidence of quality furnished by the con-

tractor or subcontractor, inspection at the contractor or subcontractor source, and examination of products upon delivery. Documentary evidence that material and equipment conform to the procurement requirements shall be available at the nuclear powerplant or fuel reprocessing plant site prior to installation or use of such material and equipment. This documentary evidence shall be retained at the nuclear powerplant or fuel reprocessing plant site and shall be sufficient to identify the specific requirements, such as codes, standards, or specifications, met by the purchased material and equipment. The effectiveness of the control of quality by contractors and subcontractors shall be assessed by the applicant or designee at intervals consistent with the importance, complexity, and quantity of the product or services.

VIII. Identification and Control of Materials, Parts, and Components

Measures shall be established for the identification and control of materials, parts, and components, including partially fabricated assemblies. These measures shall assure that identification of the item is maintained by heat number, part number, serial number, or other appropriate means, either on the item or on records traceable to the item, as required throughout fabrication, erection, installation, and use of the item. These identification and control measures shall be designed to prevent the use of incorrect or defective material, parts, and components.

IX. Control of Special Processes

Measures shall be established to assure that special processes, including welding, heat treating, and nondestructive testing, are controlled and accomplished by qualified personnel using qualified procedures in accordance with applicable codes, standards, specifications, criteria and other special requirements.

X. Inspection

A program for inspection of activities affecting quality shall be established and executed by or for the organization performing the activity to verify conformance with the documented instructions, procedures, and drawings for accomplishing the activity. Such inspection shall be performed by individuals other than those who performed the activity being inspected. Examinations, measurements, or tests of material or products processed shall be performed for each work operation where necessary to assure quality. If inspection of processed material or products is impossible or disadvantageous, indirect control by monitoring processing methods, equipment, and personnel shall be provided. Both inspection and process monitoring shall be provided when control is inadequate without both. If mandatory inspection hold points, which require witnessing or inspecting by the applicant's designated representative and beyond which work shall not proceed without the consent of its designated representative are required, the specific hold points shall be indicated in appropriate documents.

XI. Test Control

A test program shall be established to assure that all testing required to demonstrate that structures, systems, and components will perform satisfactorily in service is identified and performed in accordance with written test procedures which incorporate the requirements and acceptance limits contained in applicable design documents. The test program shall include, as appropriate, proof tests prior to installation, preoperational tests, and operational tests during nuclear power plant or fuel reprocessing plant operation, of structures, systems, and components. Test procedures shall include provisions for assuring that all prerequisites for the given test have been met, that adequate test instru-

mentation is available and used, and that the test is performed under suitable environmental conditions. Test results shall be documented and evaluated to assure that test requirements have been satisfied.

XII. Control of Measuring and Test Equipment

Measures shall be established to assure that tools, gages, instruments, and other measuring and testing devices used in activities affecting quality are properly controlled, calibrated, and adjusted at specified periods to maintain accuracy within necessary limits.

XIII. Handling, Storage and Shipping

Measures shall be established to control the handling, storage, shipping, cleaning and preservation of material and equipment in accordance with work and inspection instructions to prevent damage or deterioration. When necessary for particular products, special protective environments, such as inert gas atmosphere, specific moisture content levels, and temperature levels, shall be specified and provided.

XIV. Inspection, Test, and Operating Status

Measures shall be established to indicate, by the use of markings such as stamps, tags, labels, routing cards, or other suitable means, the status of inspections and tests performed upon individual items of the nuclear power plant or fuel reprocessing plant. These measures shall provide for the identification of items which have satisfactorily passed required inspections and tests, where necessary to preclude inadvertent bypassing of such inspections and tests. Measures shall also be established for indicating the operating status of structures, systems, and components of the nuclear power plant or fuel reprocessing plant, such as by tagging valves and switches, to prevent inadvertent operation.

XV. Nonconforming Materials, Parts, or Components

Measures shall be established to control materials, parts, or components which do not conform to requirements in order to prevent their inadvertent use or installation. These measures shall include, as appropriate, procedures for identification, documentation, segregation, disposition, and notification to affected organizations. Nonconforming items shall be reviewed and accepted, rejected, repaired or reworked in accordance with documented procedures.

XVI. Corrective Action

Measures shall be established to assure that conditions adverse to quality, such as failures, malfunctions, deficiencies, deviations, defective material and equipment, and nonconformances are promptly identified and corrected. In the case of significant conditions adverse to quality, the measures shall assure that the cause of the condition is determined and corrective action taken to preclude repetition. The identification of the significant condition adverse to quality, the cause of the condition, and the corrective action taken shall be documented and reported to appropriate levels of management.

XVII. Quality Assurance Records

Sufficient records shall be maintained to furnish evidence of activities affecting quality. The records shall include at least the following: Operating logs and the results of reviews, inspections, tests, audits, monitoring of work performance, and materials analyses. The records shall also include closely-related data such as qualifications of personnel, procedures, and equipment. Inspection and test records shall, as a minimum, identify the inspector or data recorder, the type of observation, the results, the acceptability, and the action taken in connection with any defi-

ciencies noted. Records shall be identifiable and retrievable. Consistent with applicable regulatory requirements, the applicant shall establish requirements concerning record retention, such as duration, location, and assigned responsibility.

XVIII. Audits

A comprehensive system of planned and periodic audits shall be carried out to verify compliance with all aspects of the quality assurance program and to determine the effectiveness of the program. The audits shall be performed in accordance with the written procedures or check lists by appropriately trained personnel not having direct responsibilities in the area being audited. Audit results shall be documented and reviewed by management having responsibility in the area audited. Followup action, including reaudit of deficient areas, shall be taken where indicated.

Part 50

Appendix E — Emergency Planning and Preparedness for Production and Utilization Facilities[1]

---

[1]NRC staff has developed two regulatory guides: 2.6, "Emergency Planning for Research Reactors" and 3.42 "Emergency Planning in Fuel Cycle Facilities and Plants Licensed Under 10 CFR Parts 50 and 70;" and a joint NRC/FEMA report, NUREG-0654; FEMA-REP-1. "Criteria for Preparation and Evaluation of Radiological Emergency Response Plans and Preparedness in Support of Nuclear Power Plants for Interim Use and Comment," January 1980, to provide guidance in developing plans for coping with emergencies. Copies of these documents are available at the Commission's Public Document Room, 1717 H Street, NW., Washington, D.C. 20555.. Copies of these documents may be purchased from the Government Printing Office. Information on current prices may be obtained by writing the U.S. Nuclear Regulatory Commission, Washington, D.C. 20555. Attention: Publications Sales Manager.

Table of Contents

I. Introduction
II. The Preliminary Safety Analysis Report
III. The Final Safety Analysis Report
IV. Content of Emergency Plans
V. Implementing Procedures

I. Introduction

Each applicant for a construction permit is required by § 50.34(a) to include in the preliminary safety analysis report a discussion of preliminary plans for coping with emergencies. Each applicant for an operating license is required by § 50.34(b) to include in the final safety analysis report plans for coping with emergencies.

This appendix establishes minimum requirements for emergency plans for use in attaining an acceptable state of emergency preparedness. These plans shall be described generally in the preliminary safety analysis report and submitted as a part of the final safety analysis report.

The potential radiological hazards to the public associated with the operation of research and test reactors and fuel facilities licensed under 10 CFR Parts 50 and 70 involve considerations different than those associated with nuclear power reactors. Consequently, the size of Emergency Planning Zones[2] (EPZs) for facilities other than power reactors

---

[2]EPZs for power reactors are discussed in NUREG-0396; EPA 520/1-78-016, "Planning Basis for the Development of State and Local Government Radiological Emergency Response Plans in Support of Light Water Nuclear Power Plants," December 1978. The size of the EPZs for a nuclear power plant shall be determined in relation to local emergency response needs and capabilities as they are affected by such conditions as demography, topography, land characteristics, access routes, and jurisdictional boundaries. The size of the EPZs also may be determined on a case-by-case basis for gas-cooled nuclear reactors and for reactors with an authorized power level less than 250 MW thermal. Generally, the plume exposure pathway EPZ for nuclear power plants with an authorized power level greater than 250 MW thermal shall consist of an area about 10 miles (16 km) in radius and the ingestion pathway EPZ shall consist of an area about 50 miles (80 km) in radius.

and the degree to which compliance with the requirements of this section and sections II, III, IV, and V as necessary will be determined on a case-by-case basis.[3]

II. The Preliminary Safety Analysis Report

The Preliminary Safety Analysis Report shall contain sufficient information to ensure the compatibility of proposed emergency plans for both onsite areas and the EPZs, with facility design features, site layout, and site location with respect to such considerations as access routes, surrounding population distributions, land use, and local jurisdictional boundaries for the EPZs in the case of nuclear power reactors as well as the means by which the standards of § 50.47(b) will be met.

As a minimum, the following items shall be described:

A. Onsite and offsite organizations for coping with emergencies and the means for notification, in the event of an emergency, of persons assigned to the emergency organizations.

B. Contacts and arrangements made and documented with local, State, and Federal governmental agencies with responsibility for coping with emergencies, including identification of the principal agencies.

C. Protective measures to be taken within the site boundary and within each EPZ to protect health and safety in the event of an accident; procedures by which these measures are to be carried out (e.g., in the case of an evacuation, who authorizes the evacuation, how the public is to be notified and instructed, how the evacuation is to be carried out); and the expected response of offsite agencies in the event of an emergency.

---

[3]Regulatory Guide 2.6 will be used as guidance for the acceptability of research and test reactor emergency response plans.

D. Features of the facility to be provided for onsite emergency first aid and decontamination and for emergency transportation of onsite individuals to offsite treatment facilities.

E. Provisions to be made for emergency treatment at offsite facilities of individuals injured as a result of licensed activities.

F. Provisions for a training program for employees of the licensee, including those who are assigned specific authority and responsibility in the event of an emergency, and for other persons who are not employees of the licensee but whose assistance may be needed in the event of a radiological emergency.

G. A preliminary analysis that projects the time and means to be employed in the notification of State and local governments and the public in the event of an emergency. A nuclear power plant applicant shall perform a preliminary analysis of the time required to evacuate various sectors and distances within the plume exposure pathway EPZ for transient and permanent populations, noting major impediments to the evacuation or taking of protective actions.

H. A preliminary analysis reflecting the need to include facilities, systems, and methods for identifying the degree of seriousness and potential scope of radiological consequences of emergency situations within and outside the site boundary, including capabilities for dose projection using real-time meteorological information and for dispatch of radiological monitoring teams within the EPZs; and a preliminary analysis reflecting the role of the onsite technical support center and of the near-site emergency operations facility in assessing information, recommending protective action, and disseminating information to the public.

III. The Final Safety Analysis Report

The Final Safety Analysis Report shall contain the plans for coping with emergencies. The plans shall be expression of the overall concept of operation; they shall describe the essential elements of advance planning that have been considered and the provisions that have been made to cope with emergency situations. The plans shall incorporate information about the emergency response roles of supporting organizations and offsite agencies. That information shall be sufficient to provide assurance of coordination among the supporting groups and with the licensee.

The plans submitted must include a description of the elements set out in Section IV for the Emergency Planning Zones (EPZs)[2] to an extent sufficient to demonstrate that the plans provide reasonable assurance that appropriate measures can and will be taken in the event of an emergency.

IV. Content of Emergency Plans

The applicant's emergency plans shall contain, but not necessarily be limited to, information needed to demonstrate compliance with the elements set forth below, i.e., organization for coping with radiation emergencies, assessment action, activation of emergency organization, notification procedures, emergency facilities and equipment, training, maintaining emergency preparedness, and recovery. In addition, the emergency response plans submitted by an applicant for a nuclear power reactor operating license shall contain information needed to demonstrate compliance with the standards described in § 50.47(b),[4] and they will be evaluated against those standards. The nuclear power reactor

---

[4]These objectives are addressed by specific criteria in NUREG-0654; FEMA-REP-1 entitled "Criteria for Preparation and Evaluation of Radiological Emergency Response Plans and Preparedness in Support of Nuclear Power Plants for Interim Use and Comment" January 1980.

operating license applicant shall also provide an analysis of the time required to evacuate and for taking other protective actions for various sectors and distances within the plume exposure pathway EPZ for transient and permanent populations.

A. Organization

The organization for coping with radiological emergencies shall be described, including definition of authorities, responsibilities, and duties of individuals assigned to the licensee's emergency organization and the means for notification of such individuals in the event of an emergency. Specifically, the following shall be included:

1. A description of the normal plant operating organization.

2. A description of the onsite emergency response organization with a detailed discussion of:

a. Authorities, responsibilities, and duties of the individual(s) who will take charge during an emergency;

b. Plant staff emergency assignments;

c. Authorities, responsibilities, and duties on an onsite emergency coordinator who shall be in charge of the exchange of information with offsite authorities responsible for coordinating and implementing offsite emergency measures.

3. A description, by position and function to be performed, of the licensee's headquarters personnel who will be sent to the plant site to augment the onsite emergency organization.

4. Identification, by position and function to be performed, of persons within the licensee organization who will be responsible for making offsite dose projections, and a description of how these projections will be made and the

results transmitted to State and local authorities, NRC, and other appropriate governmental entities.

5. Identification, by position and function to be performed, of other employees of the licensee with special qualifications for coping with emergency conditions that may arise. Other persons with special qualifications, such as consultants, who are not employees of the licensee and who may be called upon for assistance for emergencies shall also be identified. The special qualifications of these persons shall be described.

6. A description of the local offsite services to be provided in support of the licensee's emergency organization.

7. Identification of, and assistance expected from, appropriate State, local, and Federal agencies with responsibilities for coping with emergencies.

8. Identification of the State and/or local officials responsible for planning for, ordering, and controlling appropriate protective actions, including evacuations when necessary.

B. Assessment Actions

The means to be used for determining the magnitude of and for continually assessing the impact of the release of radioactive materials shall be described, including emergency action levels that are to be used as criteria for determining the need for notification and participation of local and State agencies, the Commission, and other Federal agencies, and the emergency action levels that are to be used for determining when and what type of protective measures should be considered within and outside the site boundary to protect health and safety. The emergency action levels shall be based on in-plant conditions and instrumentation in addition to onsite and offsite monitoring. These emergency action levels shall be discussed and agreed on

by the applicant and State and local governmental authorities and approved by NRC. They shall also be reviewed with the State and local governmental authorities on an annual basis.

C. Activation of Emergency Organization

The entire spectrum of emergency conditions that involve the alerting or activating of progressively larger segments of the total emergency organization shall be described. The communication steps to be taken to alert or activate emergency personnel under each class of emergency shall be described. Emergency action levels (based not only on onsite and offsite radiation monitoring information but also on readings from a number of sensors that indicate a potential emergency, such as the pressure in containment and the response of the Emergency Core Cooling System) for notification of offsite agencies shall be described. The existence, but not the details, of a message authentication scheme shall be noted for such agencies. The emergency classes defined shall include: (1) notification of unusual events, (2) alert, (3) site area emergency, and (4) general emergency. These classes are further discussed in NUREG-0654; FEMA-REP-1.

D. Notification Procedures

1. Administrative and physical means for notifying local, State, and Federal officials and agencies and agreements reached with these officials and agencies for the prompt notification of the public and for public evacuation or other protective measures, should they become necessary, shall be described. This description shall include identification of the appropriate officials, by title and agency, of the State and local government agencies within the EPZs.[2]

2. Provisions shall be described for yearly dissemination to the public within the plume exposure pathway EPZ of basic emergency planning information, such as the methods and times required for public notification and the protective actions planned if an accident occurs, general information as to the nature and effects of radiation, and a listing of local broadcast stations that will be used for dissemination of information during an emergency. Signs or other measures shall also be used to disseminate to any transient population within the plume exposure pathway EPZ appropriate information that would be helpful if an accident occurs.

3. A licensee shall have the capability to notify responsible State and local governmental agencies within 15 minutes after declaring an emergency. The licensee shall demonstrate that the State/local officials have the capability to make a public notification decision promptly on being informed by the licensee of an emergency condition. By July 1, 1981, the nuclear power reactor licensee shall demonstrate that administrative and physical means have been established for altering and providing prompt instructions to the public within the plume exposure pathway EPZ. The design objective shall be to have the capability to essentially complete the initial notification of the public within the plume exposure pathway EPZ within about 15 minutes. The use of this notification capability will range from immediate notification of the public (within 15 minutes of the time that State and local officials are notified that a situation exists requiring urgent action) to the more likely events where there is substantial time available for the State and local governmental officials to make a judgment whether or not to activate the public notification system. Where there is a decision to activate the notification system, the State and local officials will determine whether to activate the entire

notification system simultaneously or in a graduated or staged manner. The responsibility for activating such a public notification system shall remain with the appropriate government authorities.

E. Emergency Facilities and Equipment

Adequate provisions shall be made and described for emergency facilities and equipment, including:

1. Equipment at the site for personnel monitoring;

2. Equipment for determining the magnitude of and for continuously assessing the impact of the release of radioactive materials to the environment;

3. Facilities and supplies at the site for decontamination of onsite individuals;

4. Facilities and medical supplies at the site for appropriate emergency first aid treatment;

5. Arrangements for the services of physicians and other medical personnel qualified to handle radiation emergencies on-site;

6. Arrangements for transportation of contaminated injured individuals from the site to specifically identified treatment facilities outside the site boundary;

7. Arrangements for treatment of individuals injured in support of licensed activities on the site at treatment facilities outside the site boundary;

8. A licensee onsite technical support center and a licensee near-site emergency operations facility from which effective direction can be given and effective control can be exercised during an emergency;

9. At least one onsite and one offsite communications system; each system shall have a backup power source.

All communication plans shall have arrangements for emergencies, including titles and alternates for those in

charge at both ends of the communication links and the primary and backup means of communication. Where consistent with the function of the governmental agency, these arrangements will include:

a. Provision for communications with contiguous State/local governments within the plume exposure pathway EPZ. Such communications shall be tested monthly.

b. Provision for communications with Federal emergency response organizations. Such communications systems shall be tested annually.

c. Provision for communications among the nuclear power reactor control room, the onsite technical support center, and the near-site emergency operations facility; and among the nuclear facility, the principal State and local emergency operations centers, and the field assessment teams. Such communications systems shall be tested annually.

d. Provisions for communications by the licensee with NRC Headquarters and the appropriate NRC Regional Office Operations Center from the nuclear power reactor control room, the onsite technical support center, and the near-site emergency operations facility. Such communications shall be tested monthly.

F. Training

The program to provide for (1) the training of employees and exercising, by periodic drills, of radiation emergency plans to ensure that employees of the licensee are familiar with their specific emergency response duties and (2) the participation in the training and drills by other persons whose assistance may be needed in the event of a radiation emergency shall be described. This shall include a description of specialized initial training and periodic retraining pro-

grams to be provided to each of the following categories of emergency personnel:

a. Directors and/or coordinators of the plant emergency organization;

b. Personnel responsible for accident assessment, including control room shift personnel;

c. Radiological monitoring teams;

d. Fire control teams (fire brigades);

e. Repair and damage control teams;

f. First aid and rescue teams;

g. Medical support personnel;

h. Licensee's headquarters support personnel;

i. Security personnel.

In addition, a radiological orientation training program shall be made available to local services personnel, e.g., local Civil Defense, local law enforcement personnel, local news media persons.

The plan shall describe provisions for the conduct of emergency preparedness exercises. Exercises shall test the adequacy of timing and content of implementing procedures and methods, test emergency equipment and communication networks, test the public notification system, and ensure that emergency organization personnel are familiar with their duties. Each licensee shall exercise at least annually the emergency plan for each site at which it has one or more power reactors licensed for operation. Both full-scale and small-scale exercises shall be conducted and shall include participation by appropriate State and local government agencies as follows:

1. A full-scale exercise which tests as much of the licensee, State, and local emergency plans as is reasonably

achievable without mandatory public participation shall be conducted;

a. For each site at which one or more power reactors are located and licensed for operation, at least once every five years and at a frequency which will enable each State and local government within the plume exposure pathway EPZ to participate in at least one full-scale exercise per year and which will enable each State within the ingestion pathway to participate in at least one full-scale exercise every three years.

b. For each site at which a power reactor is located for which the first operating license for that site is issued after the effective date of this amendment, within one year before the issuance of the operating license for full power, which will enable each State and local government within the plume exposure EPZ and each State within the ingestion pathway EPZ to participate.

2. The plan shall also describe provisions for involving Federal emergency response agencies in a full-scale emergency preparedness exercise for each site at which one or more power reactors are located and licensed for operation at least once every 5 years;

3. A small-scale exercise which tests the adequacy of communication links, establishes that response agencies understand the emergency action levels, and tests at least one other component (e.g., medical or offsite monitoring) of the offsite emergency response plan for licensee, State, and local emergency plans for jurisdications [*sic*] within the plume exposure pathway EPZ shall be conducted at each site at which one or more power reactors are located and licensed for operation each year a full-scale exercise is not conducted which involves the State(s) within the plume exposure pathway EPZ.

All training, including exercises, shall provide for formal critiques in order to identify weak areas that need corrections. Any weaknesses that are identified shall be corrected.

G. Maintaining Emergency Preparedness

Provisions to be employed to ensure that the emergency plan, its implementing procedures, and emergency equipment and supplies are maintained up to date shall be described.

H. Recovery

Criteria to be used to determine when, following an accident, reentry of the facility would be appropriate or when operation could be resumed shall be described.

V. Implementing Procedures

No less than 180 days prior to scheduled issuance of an operating license for a nuclear power reactor or a license to possess nuclear material, 3 copies of each of the applicant's detailed implementing procedures for its emergency plan shall be submitted to the Director of the appropriate NRC Regional Office with 10 copies to the Director of Nuclear Reactor Regulation or, if appropriate, the Director of Nuclear Material Safety and Safeguards. In cases where a decision on an operating license is scheduled less than one year after the effective date of this rule, such implementing procedures shall be submitted as soon as practicable but before full power operation is authorized. Prior to March 1, 1981, licensees who are authorized to operate a nuclear power facility shall submit 3 copies each of the licensee's emergency plan implementing procedures to the Director of the appropriate NRC Regional Office with 10 copies to the Director of Nuclear Reactor Regulation. Three copies each of any changes to maintain these implementing procedures up to date shall be submitted to the same NRC

Regional Office with 10 copies to the Director of Nuclear Reactor Regulation or, if appropriate, the Director of Nuclear Material Safety and Safeguards within 30 days of such changes.

PART 100—REACTOR SITE CRITERIA

§ 100.1 Purpose.

(a) It is the purpose of this part to describe criteria which guide the Commission in its evaluation of the suitability of proposed sites for stationary power and testing reactors subject to Part 50 of this chapter.

(b) Insufficient experience has been accumulated to permit the writing of detailed standards that would provide a quantitative correlation of all factors significant to the question of acceptability of reactor sites. This part is intended as an interim guide to identify a number of factors considered by the Commission in the evaluation of reactor sites and the general criteria used at this time as guides in approving or disapproving proposed sites. Any applicant who believes that factors other than those set forth in the guide should be considered by the Commission will be expected to demonstrate the applicability and significance of such factors.

§ 100.2 Scope.

(a) This part applies to applications filed under Part 50 of this chapter for stationary power and testing reactors.

(b) The site criteria contained in this part apply primarily to reactors of a general type and design on which experience has been developed, but can also be applied to other reactor types. In particular, for reactors that are novel in design and unproven as prototypes or pilot plants, it is expected that these basic criteria will be applied in a manner that takes into account the lack of experience. In the ap-

plication of these criteria which are deliberately flexible, the safeguards provided—either site isolation or engineered features—should reflect the lack of certainty that only experience can provide.

§ 100.3 Definitions.

As used in this part:

(a) "Exclusion area" means that area surrounding the reactor, in which the reactor licensee has the authority to determine all activities including exclusion or removal of personnel and property from the area. This area may be traversed by a highway, railroad, or waterway, provided these are not so close to the facility as to interfere with normal operations of the facility and provided appropriate and effective arrangements are made to control traffic on the highway, railroad, or waterway, in case of emergency, to protect the public health and safety. Residence within the exclusion area shall normally be prohibited. In any event, residents shall be subject to ready removal in case of necessity. Activities unrelated to operation of the reactor may be permitted in an exclusion area under appropriate limitations, provided that no significant hazards to the public health and safety will result.

(b) "Low population zone" means the area immediately surrounding the exclusion area which contains residents, the total number and density of which are such that there is a reasonable probability that appropriate protective measures could be taken in their behalf in the event of a serious accident. These guides do not specify a permissible population density or total population within this zone because the situation may vary from case to case. Whether a specific number of people can, for example, be evacuated from a specific area, or instructed to take shelter, on a timely basis will depend on many factors such as location, number

and size of highways, scope and extent of advance planning, and actual distribution of residents within the area.

(c) "Population center distance" means the distance from the reactor to the nearest boundary of a densely populated center containing more than about 25,000 residents.

(d) "Power reactor" means a nuclear reactor of a type described in § 50.21(b) or § 50.22 of this chapter designed to produce electrical or heat energy.

(e) "Testing reactor" means a "testing facility" as defined in § 50.2 of this chapter.

Site Evaluation Factors

§ 100.10 Factors to be considered when evaluating sites.

Factors considered in the evaluation of sites include those relating both to the proposed reactor design and the characteristics peculiar to the site. It is expected that reactors will reflect through their design, construction and operation an extremely low probability for accidents that could result in release of significant quantities of radioactive fission products. In addition, the site location and the engineered features included as safeguards against the hazardous consequences of an accident, should one occur, should insure a low risk of public exposure. In particular, the Commission will take the following factors into consideration in determining the acceptability of a site for a power or testing reactor:

(a) Characteristics of reactor design and proposed operation including:

(1) Intended use of the reactor including the proposed maximum power level and the nature and inventory of contained radioactive materials;

(2) The extent to which generally accepted engineering standards are applied to the design of the reactor;

(3) The extent to which the reactor incorporates unique or unusual features having a significant bearing on the probability or consequences of accidental release of radioactive materials;

(4) The safety features that are to be engineered into the facility and those barriers that must be breached as a result of an accident before a release of radioactive material to the environment can occur.

(b) Population density and use characteristics of the site environs, including the exclusion area, low population zone, and population center distance.

(c) Physical characteristics of the site, including seismology, meteorology, geology, and hydrology.

(1) Appendix A, "Seismic and Geologic Siting Criteria for Nuclear Power Plants," describes the nature of investigations required to obtain the geologic and seismic data necessary to determine site suitability and to provide reasonable assurance that a nuclear power plant can be constructed and operated at a proposed site without undue risk to the health and safety of the public. It describes procedures for determining the quantitative vibratory ground motion design basis at a site due to earthquakes and describes information needed to determine whether and to what extent a nuclear power plant need be designed to withstand the effects of surface faulting.

(2) Meteorological conditions at the site and in the surrounding area should be considered.

(3) Geological and hydrological characteristics of the proposed site may have a bearing on the consequences of an escape of radioactive material from the facility. Special precautions should be planned if a reactor is to be located at a site where a significant quantity of radioactive effluent

might accidentally flow into nearby streams or rivers or might find ready access to underground water tables.

(d) Where unfavorable physical characteristics of the site exist, the proposed site may nevertheless be found to be acceptable if the design of the facility includes appropriate and adequate compensating engineering safeguards.

§ 100.11 Determination of exclusion area, low population zone, and population center distance.

(a) As an aid in evaluating a proposed site, an applicant should assume a fission produce [*sic*] release[1] from the core, the expected demonstrable leak rate from the containment and the meteorological conditions pertinent to his site to derive an exclusion area, a low population zone and population center distance. For the purpose of this analysis, which shall set forth the basis for the numerical values used, the applicant should determine the following:

(1) An exclusion area of such size that an individual located at any point on its boundary for two hours immediately following onset of the postulated fission product release would not receive a total radiation dose to the whole body in excess of 25 rem[2] or a total radiation dose in excess of 300 rem[2] to the thyroid from iodine exposure.

---

[1]The fission product release assumed for these calculations should be based upon a major accident, hypothesized for purposes of site analysis or postulated from considerations of possible accidental events, that would result in potential hazards not exceeded by those from any accident considered credible. Such accidents have generally been assumed to result in substantial melt-down of the core with subsequent release of appreciable quantities of fission products.

[2]The whole body dose of 25 rem referred to above corresponds numerically to the once in a lifetime accidental or emergency dose for radiation workers which, according to NCRP recommendations may be disregarded in the determination of their radiation exposure status (see NBS Handbook 69 dated June 5, 1959). However, neither its use nor that of the 300 rem value for thyroid exposure as set forth in these site criteria guides are intended to imply that these numbers constitute acceptable limits for emergency doses to the public under accident conditions. Rather, this 25 rem whole body value and the 300 rem thyroid value have been set forth in these guides as reference values, which can be used in the evaluation of reactor sites with respect to potential reactor accidents of exceedingly low probability of occurrence, and low risk of public exposure to radiation.

(2) A low population zone of such size that an individual located at any point on its outer boundary who is exposed to the radioactive cloud resulting from the postulated fission product release (during the entire period of its passage) would not receive a total radiation dose to the whole body in excess of 25 rem or a total radiation dose in excess of 300 rem to the thyroid from iodine exposure.

(3) A population center distance of at least one and one-third times the distance from the reactor to the outer boundary of the low population zone. In applying this guide, the boundary of the population center shall be determined upon consideration of population distribution. Political boundaries are not controlling in the application of this guide. Where very large cities are involved, a greater distance may be necessary because of total integrated population dose consideration.

(b) For sites for multiple reactor facilities consideration should be given to the following:

(1) If the reactors are independent to the extent that an accident in one reactor would not initiate an accident in another, the size of the exclusion area, low population zone and population center distance shall be fulfilled with respect to each reactor individually. The envelopes of the plan overlay of the areas so calculated shall then be taken as their respective boundaries.

(2) If the reactors are interconnected to the extent that an accident in one reactor could affect the safety of operation of any other, the size of the exclusion area, low population zone and population center distance shall be based upon the assumption that all interconnected reactors emit their postulated fission product releases simultaneously. This requirement may be reduced in relation to the degree of coupling between reactors, the probability of concomitant accidents and the probability that an individual would not

be exposed to the radiation effects from simultaneous releases. The applicant would be expected to justify to the satisfaction of the Commission the basis for such a reduction in the source term.

(3) The applicant is expected to show that the simultaneous operation of multiple reactors at a site will not result in total radioactive effluent releases beyond the allowable limits of applicable regulations.

§ 150.15 Persons not exempt.

(a) Persons in agreement States are not exempt from the Commission's licensing and regulatory requirements with respect to the following activities:

(1) The construction and operation of any production or utilization facility. As used in this subparagraph, "operation" of a facility includes, but is not limited to (i) the storage and handling of radioactive wastes at the facility site by the person licensed to operate the facility, and (ii) the discharge of radioactive effluents from the facility site.

APPENDIX 8.

Pertinent Provisions of the Warren-Alquist State Energy Resources Conservation and Development Act, as Amended.

§ 25000. Short title

This division shall be known and may be cited as the Warren-Alquist State Energy Resources Conservation and Development Act.

§ 25104. Commission

"Commission" means the State Energy Resources Conservation and Development Commission.

§ 25105. Construction

"Construction" means onsite work to install permanent equipment or structure for any facility. "Construction" does not include any of the following:

(a) The installation of environmental monitoring equipment.

(b) A soil or geological investigation.

(c) A topographical survey.

(d) Any other study or investigation to determine the environmental acceptability or feasibility of the use of the site for any particular facility.

(e) Any work to provide access to a site for any of the purposes specified in subdivision (a), (b), (c), or (d).

§ 25110. Facility

"Facility" means any electric transmission line or thermal powerplant, or both electric transmission line and thermal powerplant, regulated according to the provisions of this division.

§ 25119. Site

"Site" means any location on which a facility is constructed or is proposed to be constructed.

§ 25120. Thermal powerplant

"Thermal powerplant" means any stationary or floating electrical generating facility using any source of thermal energy, with a generating capacity of 50 megawatts or more, and any facilities appurtenant thereto. Exploratory, development, and production wells, resource transmission lines, and other related facilities used in connection with a geothermal exploratory project or a geothermal field development project are not appurtenant facilities for the purposes of this division.

§ 25200. Creation; membership

There is in the Resources Agency the State Energy Resources Conservation and Development Commission, consisting of five members appointed by the Governor subject to Section 25204.

§ 25220. Participation in federal and state proceedings

The commission may participate as a party, to the extent that it shall determine, in any proceeding before any federal or state agency having authority whatsoever to approve or disapprove any aspect of a proposed facility, receive notice from any applicant of all applications and pleadings filed subsequently by such applicants in any of such proceedings, and, by its request, receive copies of any of such subsequently filed applications and pleadings that it shall deem necessary.

§ 25500. Authority; necessity of certification

In accordance with the provisions of this division, the commission shall have the exclusive power to certify all sites and related facilities in the state, whether a new site

and related facility or a change or addition to an existing facility. The issuance of a certificate by the commission shall be in lieu of any permit, certificate, or similar document required by any state, local or regional agency, or federal agency to the extent permitted by federal law, for such use of the site and related facilities, and shall supersede any applicable statute, ordinance, or regulation of any state, local, or regional agency, or federal agency to the extent permitted by federal law.

After the effective date of this division, no construction of any facility or modification of any existing facility shall be commenced without first obtaining certification for any such site and related facility by the commission, as prescribed in this division.

§ 25502. Thermal powerplant or transmission line; proposed construction; notice of intention

Each person proposing to construct a thermal powerplant or electric transmission line on a site shall submit to the commission notice of intention to file an application for the certification of such site and related facility or facilities. The notice shall be an attempt primarily to determine the suitability of the proposed sites to accommodate the facilities and to determine the general conformity of the proposed sites and related facilities with standard [*sic*] of the commission and forecasts adopted pursuant to Sections 25216.3 and 25309. The notice shall be in the form prescribed by the commission and shall be supported by such information as the commission may require.

Any site and related facility once found to be acceptable pursuant to Section 25516 is, and shall continue to be, eligible for consideration in an application for certification without further proceedings required for a notice under this chapter.

§ 25503. Alternative sites and related facilities; notice; contents

Each notice of intention to file an application shall contain at least three alternative sites and related facilities, at least one of which shall not be located in whole or in part in the coastal zone. In addition, the alternative sites and related electrical facilities may be proposed from an inventory of sites which have previously been approved by the commission in a notice of intent or may be proposed from sites previously examined. * * *

§ 25504. Statement by applicant; contents

The notice of intention shall include a statement by the applicant describing the location of the proposed sites by section or sections, range and township, and county; a summary of the proposed design criteria of the facilities; the type or types of fuels to be used; the methods of construction and operation; the proposed location of facilities and structures on each site; a preliminary statement of the relative economic, technological, and environmental advantages and disadvantages of the alternative site and related facility proposals; a statement of need for the facility and information showing the compatibility of the proposals with the most recent biennial report issued pursuant to Section 25309; and any other information that an electric utility deems desirable to submit to the commission.

§ 25511. Safety and reliability factors; information required; analysis; findings

The commission shall review the factors related to safety and reliability of the facilities at each of the alternative sites designated in the notice. In addition to other information requested of the applicant, the commission shall, in determining the appropriateness of sites and related facilities,

require detailed information on proposed emergency systems and safety precautions, plans for transport, handling and storage of wastes and fuels, proposed methods to prevent illegal diversion of nuclear fuels, special design features to account for seismic and other potential hazards, proposed methods to control density of population in areas surrounding nuclear powerplants, and such other information as the commission may determine to be relevant to the reliability and safety of the facility at the proposed sites. The commission shall analyze the information provided by the applicant, supplementing it, where necessary, by onsite investigations and other studies. The commission shall determine the adequacy of measures proposed by the applicant to protect public health and safety, and shall include its findings in the * * * final report required by Section * * * 25514.

§ 25512. Summary and hearing order; basis; contents

The * * * *summary and hearing order* shall be based upon * * * *the record of the proceeding including statements or documents* presented during any hearing *or informational presentation* on the notice, the comments transmitted by the Public Utilities Commission, and local, regional, state, and federal agencies and the public to the commission, and * * * independent studies conducted by the commission's staff.

The * * * *summary and hearing order* shall * * *:

(a) * * * *Identify those issues for consideration in hearings pursuant to Section 25513.* * * *

(b) * * * *Identify those issues which may be eliminated from further consideration in the notice of intention proceedings.*

(c) * * * *Identify those issues which should be deferred to the certification proceeding.*

(d) Contain proposed findings on matters relevant to the provisions of Section *25513*.

(e) *Specify dates for the adjudicatory hearings*.

§ 25513. Adjudicatory hearings; commencement

* * * *No earlier than* 30 days *after distribution* of the * * * *summary and hearing order, the commission shall commence adjudicatory hearings pursuant to the hearing order*.

§ 25514. Final report; contents

* * * *After conclusion of the hearings held pursuant to Section 25513 and no* later than * * * *300* days after * * * *filing* of the * * * *notice*, a final report shall be prepared and distributed. The final report shall include, but not be limited to, all of the following:

(a) The findings and conclusions of the commission regarding the conformity of alternative sites and related facilities designated in the notice or * * * *considered in* the * * * *notice of intention proceeding* with both of the following:

(1) The * * * *12-year* forecast of statewide and service area electric power demands adopted pursuant to subdivision (b) of Section 25309, except as provided in Section 25514.5.

(2) * * * *Applicable* local, * * * regional, state * * *, *and federal standards, ordinances, and laws*, including any long-range land use plans or guidelines adopted by the state or by any local or regional planning agency, which would be applicable but for the exclusive authority of the commission to certify sites and related facilities; and the standards adopted by the commission pursuant to Section 25216.3.

(b) Any findings and comments submitted by the California Coastal Commission pursuant to Section 25507 and subdivision (d) of Section 30413.

(c) Any findings and comments submitted by the San Francisco Bay Conservation and Development Commission pursuant to Section 25507 of this code and subdivision (d) of Section 66645 of the Government Code.

(d) The commission's findings on the acceptability and relative merit of each alternative siting proposal designated in the notice or presented at the hearings and reviewed by the commission. The specific findings of relative merit shall be made pursuant to the provisions of Sections 25502 to 25516, inclusive. In its findings on any alternative siting proposal, the commission may specify modification [*sic*] in the design, construction, location, or other conditions which will meet the standards, policies, and guidelines established by the commission.

(e) *Findings and conclusions with respect to the safety and reliability of the facility or facilities at each of the sites designated in the notice, as determined by the commission pursuant to Section 25511, and* any conditions, modifications, or criteria proposed for any site and related facility proposal resulting from * * * *such findings and conclusions.*

§ 25516. Approval of notice; necessity for alternative site and related facility proposals; exception

The approval of the notice by the commission shall be based upon findings pursuant to Section 25514. * * * The notice shall not be approved unless the commission finds at least two alternative site and related facility proposals considered in the commission's final report as [*sic*] acceptable. If the commission does not find at least two sites and related facilities acceptable, additional sites and related

facilities may be proposed by the applicant which shall be considered in the same manner as those proposed in the original notice.

If the commission finds that a good faith effort has been made by the person submitting the notice to find an acceptable alternative site and related facility and that there is only one acceptable site and related facility among those submitted, the commission may approve the notice based on the one site and related facility. If a notice is approved based on one site and related facility, the commission may require a new notice to be filed to identify acceptable alternative sites and related facilities for the one site and related facility approved *unless suitable alternative sites and related facilities have been approved by the commission in previous notice of intention proceedings*.

If the commission finds that additional electric generating capacity is needed to accommodate the electric power demand forecast pursuant to subdivision (b) of Section 25309 and, after the commission finds that a good faith effort was made by the person submitting the notice to propose an acceptable site and related facility, it fails to find any proposed site and related facility to be acceptable, the commission shall designate, at the request of and at the expense of the person submitting the notice, a feasible site and related facility for providing the needed electric generating capacity.

§ 25517. Necessity of certification; restoration if certification denied

Except as provided in Sections 25501 and 25501.3, after the effective date of this division, no construction of any thermal powerplant or electric transmission line shall be commenced by any electric utility without first obtaining certification as prescribed in this division. Any onsite im-

provements not qualifying as construction may be required to be restored as determined by the commission as necessary to protect the environment, if certification is denied.

§ 25519. Application for certification of site and related facility; data, studies and investigation; impact report; local agencies; copies

(a) In order to obtain certification for a site and related facility, an application for certification of such site and related facility shall be filed with the commission. Such application shall be in a form prescribed by the commission and shall be for a site and related facility which has been found to be acceptable by the commission pursuant to Section 25516, or for an additional facility at a site which has been designated a potential multiple-facility site pursuant to Section 25514.5 and found to be acceptable pursuant to Sections 25516 and 25516.5. An application for an additional facility at a potential multiple-facility site shall be subject to the conditions and review specified in Section 25520.5. An application may not be filed for a site and related facility, if there is no suitable alternative for the site and related facility which was previously found to be acceptable by the commission, unless the commission has approved the notice based on the one site as specified in Section 25516.

(b) The commission, upon its own motion or in response to the request of any party, may require the applicant to submit any information, document, or data, in addition to the attachments required by subdivision (i), which it determines is reasonably necessary to make any decision on the application.

(c) * * * The commission shall * * * *be the lead agency as provided in Section 21165 for all projects which require certification pursuant to this chapter and for proj-*

ects which are exempted from such certification pursuant to Section 25541. Unless the commission's regulatory program governing site and facility certification and related proceedings are certified by the Resources Agency pursuant to Section 21080.5, an environmental impact report shall be completed within one year after receipt of the application. If the commission prepares a document or documents in the place of an environmental impact report or negative declaration under a regulatory program certified pursuant to Section 21080.5, any other public agency which must make a decision which is subject to the California Environmental Quality Act, Division 13 (commencing with Section 21000), on a site or related facility, shall use the document or documents prepared by the commission in the same manner as they would use an environmental impact report or negative declaration prepared by a lead agency.

(d) If the site and related facility specified in the application is proposed to be located in the coastal zone, the commission shall transmit a copy of the application to the California Coastal Commission for its review and comments.

(e) If the site and related facility specified in the application is proposed to be located in the Suisun Marsh or the jurisdiction of the San Francisco Bay Conservation and Development Commission, the commission shall transmit a copy of the application to the San Francisco Bay Conservation and Development Commission for its review and comments.

(f) Upon receipt of an application, the commission shall forward the application to local governmental agencies having land use and related jurisdiction in the area of the proposed site and related facility. Such local agencies shall review the application and submit comments on, among other things, the design of the facility, architectural and

aesthetic features of the facility, access to highways, landscaping and grading, public use of lands in the area of the facility, and other appropriate aspects of the design, construction, or operation of the proposed site and related facility.

(g) Upon receipt of an application, the commission shall cause a summary of the application to be published in a newspaper of general circulation in the county in which the site and related facilities, or any part thereof, designated in the application, is proposed to be located. The commission shall transmit a copy of the application to each federal and state agency having jurisdiction or special interest in matters pertinent to the proposed site and related facilities and to the Attorney General.

(h) The adviser shall require that adequate notice is given to the public and that the procedures specified by this division are complied with.

(i) For any proposed site and related facility requiring a certificate of public convenience and necessity, the commission shall transmit a copy of the application to the Public Utilities Commission and request the comments and recommendations of the Public Utilities Commission on the economic, financial, rate, system reliability, and service implications of the proposed site and related facility. In the event the commission requires modification of the proposed facility, the commission shall consult with the Public Utilities Commission regarding the economic, financial, rate, system reliability, and service implications of such modifications.

(j) The commission shall transmit a copy of the application to any governmental agency not specifically mentioned in this act, but which it finds has any information or interest in the proposed site and related facilities, and

shall invite the comments and recommendations of each such agency. The commission shall request any relevant laws, ordinances, or regulations which any such agency has promulgated or administered.

(k) An application for certification of any site and related facilities shall contain a listing of every federal agency from which any approval or authorization concerning the proposed site is required, specifying the approvals or authorizations obtained at the time of the application and the schedule for obtaining any approvals or authorizations pending.

§ 25520. Application; contents

The application shall contain the following and such other information as the commission by regulation may require:

(a) A detailed description of the design, construction, and operation of the proposed facility.

(b) Safety and reliability information, including, in addition to documentation previously provided pursuant to Section 25511, planned provisions for emergency operations and shutdowns.

(c) Available site information, including maps and descriptions of present and proposed development and, as appropriate, geological, aesthetic, ecological, seismic, water supply, population and load center data, and justification for the particular site proposed.

(d) Such other information relating to the design, operation, and siting of the facility as the commission may specify.

(e) A statement of need providing information showing compatibility of the proposed facility with the most recent biennial report issued by the commission pursuant to Section 25309.

(f) A description of the facility, the cost of the facility, the fuel to be used, the source of fuel, fuel cost, plant service life and capacity factor, and generating cost per kilowatt hour.

(g) A description of any electric transmission lines including the estimated cost of the proposed electric transmission line; a map in suitable scale of the proposed routing showing details of the rights-of-way in the vicinity of settled areas, parks, recreational areas, and scenic areas, and existing transmission lines within one mile of the proposed route; and justification for the route and a preliminary description of the effect of the proposed electric transmission line on the environment, ecology, and scenic, historic and recreational values.

§ 25522. Written decision; time

Except as provided in subdivision (c) of Section 25520.5, within 18 months of the filing of an application for certification or at such later time as is mutually agreed by the commission and the applicant, the commission shall issue a written decision as to such application.

§ 25523. Written decision; contents

The commission shall prepare a written decision after the public hearing on an application, which shall include all of the following:

(a) Specific provisions relating to the manner in which the proposed facility is to be designed, sited, and operated in order to protect environmental quality and assure public health and safety.

(b) In the case of a site to be located in the coastal zone, specific provisions to meet the objectives of Division 20 (commencing with Section 30000) as may be specified in the report submitted by the California Coastal Commission

pursuant to subdivision (d) of Section 30413, unless the commission specifically finds that the adoption of the provisions specified in the report would result in greater adverse effect on the environment or that the provisions proposed in the report would not be feasible.

(c) In the case of a site to be located in the Suisun Marsh or in the jurisdiction of the San Francisco Bay Conservation and Development Commission, specific provisions to meet the requirements of Division 19 (commencing with Section 29000) of this code or Title 7.2 (commencing with Section 66600) of the Government Code as may be specified in the report submitted by the San Francisco Bay Conservation and Development Commission pursuant to subdivision (d) of Section 66645 of the Government Code, unless the commission specifically finds that the adoption of the provisions specified in the report would result in greater adverse effect on the environment or the provisions proposed in the report would not be feasible.

(d) Findings regarding the conformity of the proposed site and related facilities with standards adopted by the commission pursuant to Section 25216.3 and subdivision (d) of Section 25402, with public safety standards and the applicable air and water quality standards, and with other relevant local, regional, state, and federal standards, ordinances, or laws. If the commission finds that there is noncompliance with any state, local, or regional ordinance or regulation in the application, it shall consult and meet with the state, local, or regional governmental agency concerned to attempt to correct or eliminate the noncompliance. If the noncompliance cannot be corrected or eliminated, the commission shall inform the state, local, or regional governmental agency if it makes the findings required by Section 25525.

(e) Provision for restoring the site as necessary to protect the environment, if the commission denies approval of the application.

(f) Findings regarding the conformity of the proposed facility with the * * * *12-year* forecast of statewide and service area electric power demands adopted pursuant to subdivision (b) of Section 25309.

§ 25524.1. Nuclear fuel rod reprocessing and storage; conditions for plant certification and land use; findings; resolution of disaffirmance; vested rights

(a) No nuclear fission thermal powerplant requiring the reprocessing of fuel rods, including any to which the provisions of this chapter do not otherwise apply, excepting any having vested right as defined in this section, shall be permitted land use in the state or, where applicable, certified by the commission until both of the following conditions are met:

(1) The commission finds that the United States through its authorized agency has identified and approved , and there exists a technology for the construction and operation of, nuclear fuel rod reprocessing plants.

(2) The commission has reported its findings and the reasons therefor pursuant to paragraph (1) to the Legislature. Such reports of findings shall be assigned to appropriate policy committees for review. The commission may proceed to certify nuclear fission thermal powerplants 100 legislative days after reporting its findings unless within those 100 legislative days either house of the Legislature adopts by a majority vote of its members a resolution disaffirming the findings of the commission made pursuant to paragraph (1).

A resolution of disaffirmance shall set forth the reasons for the action and shall provide to the extent possible, guidance to the commission as to an appropriate method of

bringing the commission's findings into conformance with paragraph (1).

If a disaffirming resolution is adopted, the commission shall reexamine its original findings consistent with matters raised in the resolution. On conclusion of its reexamination, the commission shall reduce its findings to writing with the reasons therefor and shall transmit them to the Legislature.

If the findings are that the conditions of paragraph (1) have been met, the commission may proceed to certify nuclear fission thermal powerplants 100 legislative days after reporting its findings to the Legislature unless within those 100 legislative days both houses of the Legislature act by statute to declare the findings null and void and takes appropriate action.

To allow sufficient time for the Legislature to act, the report of findings of the commission shall be submitted to the Legislature at least six calendar months prior to the adjournment of the Legislature sine die.

(b) The commission shall further find on a case-by-case basis that facilities with adequate capacity to reprocess nuclear fuel rods from a certified nuclear facility or to store such fuel if such storage is approved by an authorized agency of the United States are in actual operation or will be in operation at the time such nuclear facility requires such reprocessing or storage; provided, however, that such storage of fuel is in an offsite location to the extent necessary to provide continuous onsite full core reserve storage capacity.

(c) The commission shall continue to receive and process notices of intention and applications for certification pursuant to this division, but shall not issue a decision pursuant to Section 25523 granting a certificate until the requirements of this section have been met. All other permits,

licenses, approvals, or authorizations for the entry or use of the land, including orders of court, which may be required may be processed and granted by the governmental entity concerned but construction work to install permanent equipment or structures shall not commence until the requirements of this section have been met.

For purposes of this section, the vested right to construct a nuclear thermal powerplant shall exist if, prior to the date on which this section is chaptered, an electric utility has performed substantial construction on such powerplant and has incurred substantial expense for construction and for necessary materials for such powerplant, including, but not limited to, the following sites and facilities, with the associated estimated generating capacities:

(1) As designated in the report of the Pacific Gas and Electric Company submitted to the Public Utilities Commission on December 23, 1966, pursuant to Section 1001 of the Public Utilities Code, one nuclear thermal powerplant, having a generating capacity of 1,060 megawatts, commonly known as Diablo Canyon Unit 1, to be located in San Luis Obispo County.

(2) As designated in the report of the Pacific Gas and Electric Company submitted to the Public Utilities Commission on February 16, 1968, pursuant to Section 1001 of the Public Utilities Code, one nuclear thermal powerplant, having a generating capacity of 1,060 megawatts, commonly known as Diablo Canyon Unit 2, to be located in San Luis Obispo County.

(3) As designated in the report of the Southern California Edison Company and the San Diego Gas and Electric Company to the Public Utilities Commission on July 16, 1970, pursuant to Section 1001 of the Public Utilities Code, two nuclear thermal powerplants, having a generating ca-

pacity of 1,100 megawatts per unit, commonly known as San Onofre Unit 2 and San Onofre Unit 3, to be located in San Diego County.

§ 25524.2. Disposal of high-level nuclear waste; conditions for plant certification and land use; findings; resolution of disaffirmance; vested rights

No nuclear fission thermal powerplant, including any to which the provisions of this chapter do not otherwise apply, but excepting those exempted herein, shall be permitted land use in the state, or where applicable, be certified by the commission until both conditions (a) and (b) have been met:

(a) The commission finds that there has been developed and that the United States through its authorized agency has approved and there exists a demonstrated technology or means for the disposal of high-level nuclear waste.

(b) The commission has reported its findings and the reasons therefor pursuant to paragraph (a) to the Legislature. Such reports of findings shall be assigned to appropriate policy committees for review. The commission may proceed to certify nuclear fission thermal powerplants 100 legislative days after reporting its findings unless within those 100 legislative days either house of the Legislature adopts by a majority vote of its members a resolution disaffirming the findings of the commission made pursuant to paragraph (a).

A resolution of disaffirmance shall set forth the reasons for the action and shall provide to the extent possible, guidance to the commission as to an appropriate method of bringing the commission's findings into conformance with paragraph (a).

If a disaffirming resolution is adopted, the commission shall reexamine its original findings consistent with matters raised in the resolution. On conclusion of its reexamination,

the commission shall reduce its findings to writing with the reasons therefor and shall transmit them to the Legislature.

If the findings are that the conditions of paragraph (a) have been met, the commission may proceed to certify nuclear fission thermal powerplants 100 legislative days after reporting its findings to the Legislature unless within those 100 legislative days both houses of the Legislature act by statute to declare the findings null and void and take appropriate action.

To allow sufficient time for the Legislature to act, the reports of findings of the commission shall be submitted to the Legislature at least six calendar months prior to the adjournment of the Legislature sine die.

(c) As used in this section, "technology or means for the disposal of high-level nuclear waste" means a method for the permanent and terminal disposition of high-level nuclear waste. It shall not necessarily require that facilities for the application of such technology and/or means be available at the time the commission makes its findings. Such disposition shall not necessarily preclude the possibility of an approved process for retrieval of such waste.

(d) The commission shall continue to receive and process notices of intention and applications for certification pursuant to this division but shall not issue a decision pursuant to Section 25523 granting a certificate until the requirements of this section have been met. All other permits, licenses, approvals or authorizations for the entry or use of the land, including orders of court, which may be required may be processed and granted by the governmental entity concerned but construction work to install permanent equipment or structures shall not commence until the requirements of this section have been met.

(e) Any nuclear fission powerplant is exempted from the provisions of this section if prior to the date on which this section is chaptered an electric utility has performed substantial construction on such powerplant and has incurred substantial expense for construction and for necessary materials for such powerplant, including, but not limited to, the following sites and facilities, with the associated estimated generating capacities:

(1) As designated in the report of the Pacific Gas and Electric Company submitted to the Public Utilities Commission on December 23, 1966, pursuant to Section 1001 of the Public Utilities Code, one nuclear thermal powerplant, having a generating capacity of 1,060 megawatts, commonly known as Diablo Canyon Unit 1, to be located in San Luis Obispo County.

(2) As designated in the report of the Pacific Gas and Electric Company submitted to the Public Utilities Commission on February 16, 1968, pursuant to section 1001 of the Public Utilities Code, one nuclear thermal powerplant, having a generating capacity of 1,060 megawatts, commonly known as Diablo Canyon Unit 2, to be located in San Luis Obispo County.

(3) As designated in the report of the Southern California Edison Company and the San Diego Gas and Electric Company to the Public Utilities Commission on July 16, 1970, pursuant to Section 1001 of the Public Utilities Code, two nuclear thermal powerplants, having a generating capacity of 1,100 megawatts per unit, commonly known as San Onofre Unit 2 and San Onofre Unit 3, to be located in San Diego County.

§ 25524.25 Determination as to whether findings can be made in required time; recommendation

(a) Notwithstanding any other provision of this division, the commission shall, no later than January 16, 1978, transmit, to each house of the Legislature, its determination as

to whether all of the findings required by Sections 25524.1 and 25524.2 can be made at that time. In the event that the commission determines that any of such findings cannot then be made, it shall include in its determination a recommendation as to whether any facilities, or any unit thereof, for which a notice of intention has been filed with the commission before January 1, 1977, should be exempted from the requirements of Sections 25524.1 and 25524.2, and what conditions, if any, should be attached to such exemption.

In making the recommendation required by this subdivision the commission shall consider the following:

(1) The commission's most recent energy and demand forecast as updated to indicate the energy requirement, capacity and supply for the area proposed to be served by any such facilities as identified in the notice of intention at the time the commission's recommendation is made.

(2) The extent to which the need identified in * * * *paragraph* (1) can be reduced by nongenerational alternatives to the proposed facilities or by reasonable conservation measures, or both.

(3) Whether any practical alternative technology is or will be available to meet the need as determined pursuant to * * * *paragraph* (1) or (2). For purposes of this * * * *paragraph* "practical alternative technology" means a facility which uses a form of primary energy for generation other than that proposed for use in the facilities which are the subject of such notice of intention, which alternative facility is or will be economically comparable, for which technology is or will be available, which is environmentally acceptable, and which, in prudent judgment, could be certified and constructed in sufficient time to meet the need determined pursuant to * * * *paragraphs* (1) and (2) or

within the same time period as the facilities subject to this section, whichever is longer.

For purposes of making the findings required by * * * *paragraphs* (1), (2), and (3) of this subdivision, the commission shall consider, among other things, the record of the proceedings on the notice of intention for such facilities and shall hold such hearings as it deems necessary.

(b) In the event that the commission recommends that the proposed facilities be exempted from Sections 25524.1 and 25524.2, the Legislature, within 90 days of receipt of such recommendation, shall act on it.

§ 25524.3 Undergrounding and berm containment of nuclear reactors; conditions for plant certification and land use; evaluation and verification by legislature; vested rights

No nuclear fission thermal powerplant, including any to which the provisions of this chapter do not otherwise apply, but excepting any having vested rights as defined in this section, shall be permitted land use in the state or, where applicable, be certified by the commission until the following conditions have been met:

(a) The commission has undertaken and completed a study of the necessity for, and effectiveness and economic feasibility of, undergrounding and berm containment of nuclear reactors, and, upon completion of the study, the commission, after public hearings, had determined whether to require by rules and regulations that unclear [*sic*] reactors be either underground or berm contained. The commission shall complete such study and submit it to the Legislature, with conclusions and recommendations, within one year from * * * *January 1, 1977. The commission shall also submit to the Legislature, along with the study, a report indicating any staff positions and duties which will be nec-*

essary, beyond the study completion date, in order to implement the provisions of this section. Any staff position created by the commission for the purpose of implementing the provisions of this section shall be eliminated by the end of the 1977-78 fiscal years.

(b) In the event that the commission determines that undergrounding and berm containment are necessary, effective, or economically feasible to meet the requirements of Sections 25511 and 25520, relating to enhancing the public health and safety at a site and related facility, rules and regulations implementing such findings shall be suspended for a period of one year so as to provide the Legislature with the necessary time to evaluate and verify the results of the study.

(c) In the event that the commission determines that undergrounding and berm containment are not necessary, effective, or economically feasible to meet the requirements of Sections 25511 and 25520, relating to enhancing the public health and safety at a site, no nuclear fission thermal powerplant shall be approved for one year thereafter, so as to provide the Legislature with the necessary time to evaluate the study for possible statutory implementation.

The commission shall continue to receive and process notices of intention and applications for certification pursuant to this division, but shall not issue a decision pursuant to Section 25523 granting a certificate until the requirements of this section have been met. All other permits, licenses, approvals or authorizations for the entry or use of the land, including orders of court, which may be required may be processed and granted by the governmental entity concerned but construction work to install permanent equipment or structures shall not commence until the requirements of this section have been met.

For purposes of this section, the vested right to construct a nuclear thermal powerplant shall exist if, prior to * * * *January 1, 1977*, an electric utility has performed substantial construction on such powerplant and has incurred substantial expense for construction and for necessary materials for such powerplant, including, but not limited to, the following sites and facilities, wtih [*sic*] the associated estimated generating capacities:

(1) As designated in the report of the Pacific Gas and Electric Company submitted to the Public Utilities Commission on December 23, 1966, pursuant to Section 1001 of the Public Utilities Code, one nuclear thermal powerplant, having a generating capacity of 1,060 megawatts, commonly known as Diablo Canyon Unit 1, to be located in San Luis Obispo County.

(2) As designated in the report of the Pacific Gas and Electric Company submitted to the Public Utilities Commission on February 16, 1968, pursuant to Section 1001 of the Public Utilities Code, one nuclear thermal powerplant, having a generating capacity of 1,060 megawatts, commonly known as Diablo Canyon Unit 2, to be located in San Luis Obispo County.

(3) As designated in the report of the Southern California Edison Company and the San Diego Gas and Electric Company to the Public Utilities Commission on July 16, 1970, pursuant to Section 1001 of the Public Utilities Code, two nuclear thermal powerplants, having a generating capacity of 1,100 megawatts per unit, commonly known as San Onofre Unit 2 and San Onofre Unit 3, to be located in San Diego County.

Notwithstanding any provisions of this section to the contrary, the provisions of this section shall not apply to any nuclear fission thermal powerplant site and related facility

for which a notice of intent has been filed pursuant to Section 25502 with, and accepted by, the commission within three years of * * * *January 1, 1977.*

§ 25525. Conformance with standards, ordinances and laws; exception

The commission shall not certify any facility contained in the application when it finds, pursuant to subdivision (b) of Section 25523, that the facility does not conform with any applicable state, local, or regional standards, ordinances, or laws, unless the commission determines that such facility is required for public convenience and necessity and that there are not more prudent and feasible means of achieving such public convenience and necessity. In no event shall the commission make any finding in conflict with applicable federal law or regulation. The basis for such findings shall be reduced to writing and submitted as part of the record pursuant to Section 25523.

§ 25528. Acquisition of development rights by applicant; population densities; eminent domain; nuclear facility; governmental land use restrictions

(a) The commission shall require as a condition of certification of any site and related facility, that the applicant acquire, by grant or contract, the right to prohibit development of privately owned lands in the area of the proposed site which will result in population densities in excess of the maximum population densities which the commission determines, as to the factors considered by the commission pursuant to Section 25511, are necessary to protect public health and safety.

If the applicant is authorized to exercise the right of eminent domain under Article 7 (commencing with Section 610) of Chapter 3 of Part 1 of Division 1 of the Public

Utilities Code, the applicant may exercise the right of eminent domain to acquire such development rights as the commission requires be acquired.

(b) In the case of an application for a nuclear facility, the area and population density necessary to insure the public's health and safety designated by the commission shall be that as determined from time to time by the United States * * * *Nuclear Regulatory* Commission, if the commission finds that such determination is sufficiently definitive for valid land use planning requirements.

(c) The commission shall waive the requirements of the acquisition of development rights by an applicant to the extent that the commission finds that existing governmental land use restrictions are of a type necessary and sufficient to guarantee the maintenance of population levels and land use development over the lifetime of the facility which will insure the public health and safety requirements set pursuant to this section.

(d) No change in governmental land use restrictions in such areas designated in subdivision (c) of this section by any government agency shall be effective until approved by the commission. Such approval shall certify that the change in land use restrictions is not in conflict with requirements provided for by this section.

(e) It is not the intent of the Legislature by the enactment of this section to take private property for public use without payment of just compensation in violation of the United States Constitution or the Constitution of California.

§ 25532. Monitoring system

The commission shall establish a monitoring system to assure that any facility certified under this division is constructed and is operating in compliance with air and water quality, public health and safety, and other applicable reg-

ulations, guidelines, and conditions adopted or established by the commission or specified in the written decision on the application. In designing and operating the monitoring system, the commission shall seek the cooperation and assistance of the State Air Resources Board, the State Water Resources Control Board, the Department of Health, and other state, regional, and local agencies which have an interest in environmental control.

APPENDIX 9.

Rejection Letter From Energy Commission to PGandE.

[Letterhead]

September 29, 1977

Mr. Dan G. Lubbock, Senior Counsel
Mr. Elmer E. Hall, Chief Siting Engineer
Pacific Gas & Electric Company
77 Beale Street
San Francisco, CA 94106

Pursuant to the authority vested in the Executive Director by Section 1708 of Title 20 of the California Administrative Code, the Notice of Intention (NOI) for Stanislaus Nuclear Project, filed on August 30, 1977, is hereby returned because it does not contain information required by Commission regulations in sufficient detail to permit an adequate staff analysis.

The Staff of the Commission has undertaken a thorough review of the information contained in the Notice. The first step in the Staff review was a determination of whether the Notice addressed, in some fashion, each of the numerous informational categories specified in the Public Resources Code and the Commission's NOI regulations. Members of the Commission's technical staff and representatives of appropriate state agencies reviewed the document to determine whether the information in the NOI was presented in sufficient detail to permit adequate Staff analysis of the proposed alternative sites and related facilities. The General Counsel's Office reviewed the Staff's NOI assessment in order to assure that the criteria used to determine the adequacy of the NOI, as well as the documentation in the NOI, were consistent with the provisions of the Warren-Alquist Act, the Commission's NOI regulations, and the Commission's Biennial Report.

The NOI contains information and statements which assert that over 5000 megawatts of new electrical generating capacity will be needed in the late 1980's and that the construction of two 1200 megawatt nuclear power plants, at any of the three alternative sites, is an acceptable and preferable method for meeting a substantial portion of this need. The NOI asserts that each of the three alternative sites presented is both suitable for the nuclear power plant facilities proposed and licensable under relevant regulatory requirements. The NOI further claims that the proposed sites and related facilities are the result of a thorough selection process. However, the conclusions presented in the NOI are not accompanied by an adequate explication of the criteria, analysis and data relied upon by the Company in arriving at the conclusions and assertions presented in the document. As a result, the thoroughness and validity of the Company's planning and decision-making process employed for this NOI cannot be adequately assessed. Under these circumstances it is unlikely that the Staff will have the ability to evaluate the acceptability of the proposed sites and related facilities, and the preferability of the proposals over reasonable alternatives, within the time limitations of the Warren-Alquist Act.

The basis for the return of the NOI is explained in the following summary. The Staff finds that the data inadequacies in these areas preclude the Staff from performing an adequate analysis.

Safety and Reliability

The Notice of Intention (NOI) does not contain adequate information concerning the safety and reliability of the proposed facilities. The information required by the Warren-Alquist Act and the Commission's NOI regulations is either entirely lacking in key safety and reliability areas, or is not

presented in sufficient detail to allow an adequate Staff analyses [*sic*] of the NOI.

Section 25511 of the Act reveals a clear legislative intent that safety and reliability be subject to a degree of scrutiny not generally required for other matters considered in an NOI. While the requirements for the contents of an NOI are set forth in general terms in section 25504 of the Act (as well as § 1703(a) of the Commission's NOI regulations), section 25511 expressly requires that *detailed* information be provided in the NOI on matters relating to safety and reliability. Thus, while consideration of other subject areas may occasionally require detailed analysis in order to resolve critical issues of site or facility acceptability, the Legislature has given explicit recognition to the presumption that determining the acceptability of sites and related facilities will always require a detailed examination of safety and reliability issues.

The relevant portions of section 25511 are as follows:

> ". . . the Commission shall require detailed information on proposed emergency systems and safety precautions, plans for transport, handling and storage of wastes and fuels, proposed methods to prevent illegal diversion of nuclear fuels, special design features to account for seismic and other potential hazards, proposed methods to control density of population in areas surrounding nuclear power plants, and such other information as the Commission may determine to be relevant to the reliability and safety of the facility at the proposed sites." (Emphasis added).

After careful Staff review of the safety and reliability information presented in the NOI, I have concluded that the document does not contain information relating to these areas in sufficient detail to allow the Staff to perform the

level of analysis clearly mandated by the Warren-Alquist Act. Particular inadequacies in the areas of safety and reliability are summarized as follows:

1. *Health and Safety: Nuclear Fuel Cycle*

Although the NOI includes a discussion of emissions, the discussion is limited to emissions from the reactor itself. No information is provided on the nature and extent of the emissions from other portions of the nuclear fuel cycle.

2. *Spent Fuel Storage and Handling*

The NOI does not discuss the consequences of the accumulation of spent fuel on-site in the event that operating reprocessing facilities or off-site facilities are insufficient or unavailable. The Applicant has not discussed the consequences of this accumulation including the increased potential for accidents, loss of cladding integrity, sabotage, seismic damage, the need to remove and ship fuel rapidly, or the responsibility for spent fuel. Nor has it addressed sufficiently the measures to ensure adequate storage capacity.

3. *Comparative Health and Safety*

The Applicant has provided an economic comparison only, comparing the proposed nuclear plant to coal, geothermal, and combined cycle alternatives, but has provided no similar comparison on a health and safety basis. The NOI does not contain a discussion of the comparative health and safety impacts in sufficient detail to permit an analysis of the relative advantages and disadvantages of the proposed facility in relationship to other reasonable alternatives.

4. *Radiological Health Effects*

The NOI contains inadequate information regarding the environmental pathways that radioisotopes released by the plant might take given the specific environments of the

proposed sites. Information is also lacking in health effects as calculated using realistic dose commitments for long-lived radioisotopes, and on the probability and consequences of accidental releases from the power plant including the degree to which accidental releases of radioisotopes may constitute a risk to health. Without this information, the Staff cannot realistically assess the true potential health impacts from operation of the proposed facility.

5. *Decommissioning*

The NOI provides a recitation of four commonly discussed methods of decommissioning without providing further information on the potential radiologic impacts on the public, provisions to maintain security and custody for 100 years or longer if protective storage is employed, mechanisms to ensure eventual dismantling and site restoration if necessary, and requirements for deep geologic or shallow burial of decommissioning wastes.

6. *Emergency Planning and Population Density Control*

The NOI does not include a discussion of the major factors at each site which would affect emergency response capabilities and requirements. While the Applicant identifies the general plans of the three counties in which the proposed sites are located, no analysis of the effectiveness of those plans to control population density is presented. In addition, the Applicant fails to identify contingency plans which will be used in the event that the general plans are ineffective in controlling population density or methods of monitoring population density trends around the plant.

7. *Sabotage and Theft of Nuclear Fuel*

In the NOI, the Applicant lists the general security requirements designed to deter sabotage, but does not discuss these requirements or their implications in any detail. NRC

restrictions on the publication of these security measures do not preclude a more detailed discussion. Nor does the NOI address the health and safety consequences of possible sabotage or the possibility that the NRC security requirements may be difficult to implement because of employee or public acceptance.

8. *Human Error*

No information is provided in the NOI on operator competence and performance standards, technical qualification programs, control board design, or operator complacency prevention measures. Nor is there an adequate discussion of quality assurance in either plant maintenance or construction.

9. *Price-Anderson Liability Protection*

The NOI does not include a discussion of the Applicant's ability to construct and operate the proposed plant in the event that liability protection under the Price-Anderson Act is removed. Discussions of the potential economic cost of an accident, and the economic impact on the Applicant's rate payers should the plant cease to operate because of the loss of liability protection are not included.

10. *Reliability*

The NOI does not contain information indicating the detailed actual reliability experience at comparable nuclear plants and the recorded and anticipated impact on reliability due to abnormal conditions, component failure, build-up of radioactive "crud", inadequate spent fuel storage capacity, safety inspections to check for problems, and failure of quality assurance programs. Other factors, such as size of the plant, may also affect the reliability of the proposed plant. The NOI's discussion of these reliability-related matters is totally deficient.

11. *Fuel Availability*

The NOI does not provide sufficient data to enable the Staff to assess the adequacy of domestic raw uranium resources, mining and milling capacity, and enrichment capacity for fueling U.S. reactors. A more detailed assessment of fuel availability which addresses these factors should be provided in order to permit an analysis of long-term reliability.

12. *Comparison of Nuclear Steam Supply Systems*

Since the Applicant has indicated in the NOI that it has not yet chosen between a boiling water reactor system and a pressurized water reactor system, any resubmitted NOI should include a detailed comparison of these two systems for each of the safety and reliability issues noted above.

Need

The information contained in the NOI is insufficient to permit an adequate Staff analysis of whether a need will exist for 2400 megawatts of additional generation capacity in the late 1980's and whether the proposed nuclear facilities are acceptable and preferable choices given the range of alternatives available to the Applicant. The data inadequacies identified under this broad heading include inadequately documented planning load and reserve margin assumptions, the failure to identify known or likely participants and their energy needs, a totally inadequate discussion of the potential impacts of non-generation alternatives on need for capacity and energy, and an inadequate discussion of potential generation alternatives to the proposed facilities. Specifically, the most important inadequacies in the general area of "need" can be summarized as follows:

1. *Demand*

   a. The document does not contain any data or analysis explicating or justifying the reserve margin levels assumed for resource planning purposes. Reliability criteria are briefly described but a justification for their use in determining resource needs is not provided.

   b. The NOI contains information indicating the adjustments that should be made to the adopted forecast to arrive at the PG&E service area demand. These adjustments include "dry year adders" and special loads and losses not accounted for in the forecast. However, although the numerical adjustments are provided, the substantiation for these adjustments is not. These adjustments have not been verified in any previous Commission proceeding.

   c. The data presented in the NOI is not adequate to enable the Staff to determine the levels of energy savings and demand reduction that can be reasonably and cost-effectively obtained through existing and expanded conservation and load management programs by the completion date of the proposed facilities. Nor does the NOI contain sufficient data from which the Staff can assess whether the proposed additional generating capacity will produce greater net benefits when compared with feasible demand reducing alternatives.

2. *Resource Alternatives*

   a. The NOI contains conclusory statements asserting that geothermal development beyond that already assumed in the Company's resource plans is not achievable. The document does not contain any substantiation for these assertions, nor does it contain

any supporting data from which the Staff might determine the full extent of geothermal development that is achievable by the late 1980's.

b. The NOI contains a brief comparison of generation costs between nuclear, coal, and oil generating alternatives. However, this comparison is accompanied by little if any support documentation, analyses, or discussion of other factors important to a choice among alternatives. Specifically, there is little or no information describing the comparative health and safety, environmental, social and institutional, and reliability advantages and disadvantages of these basic generating alternatives. Without this basic information, the Staff cannot adequately assess the Applicant's choice of technology nor determine whether there are obviously preferable alternatives to the Applicant's proposal.

c. The NOI contains a series of brief conclusory discussions asserting the non-feasibility of various unconventional generation alternatives. The document does not contain any supporting data for the assertion that solar, fuel cells, biomass and solid waste alternatives are not feasible and preferable substitutes for part or all of the new generation capacity proposed in the NOI. The NOI states that it may be prudent to include cogeneration in future resource planning and states that PG&E is pursuing this alternative. However, no cogeneration resources are included in the submitted resource plan nor is there any indications of the amounts of potential cogeneration capacity being pursued or the amounts which can be reasonably expected by the late 1980's. The document does not reflect available information concerning the economic and technical feasibility of these

alternatives, including information identified or contained in the Commission's Biennial Report. In summary, the NOI does not include a sufficient description of the criteria used in determining methods of generation or an assessment of the relative weight given to each criteria as required by section 1703(e) of the regulations. The absence of this information precludes any analysis of the reasonableness of the Company's decision-making process and comparative analysis in selecting the proposed project over other resource alternatives.

PUC Identified Inadequacies

Major informational deficiencies were identified in areas over which the State Public Utilities Commission (PUC) has important advisory and approval responsibilities. Section 25506.5 of the Energy Act provides that the PUC shall prepare "comments and recommendations regarding the design, operation, and location of the facilities designated in the Notice in relation to the economic, financial, rate, system reliability, and service implications of the proposed facilities." At the request of the Energy Commission Staff, the PUC reviewed the adequacy of the data presented in the NOI in those areas of concern to the PUC. A copy of the response of the PUC's Executive Director is attached to this letter. Since the Energy Act provides that the PUC's comments and recommendations be transmitted to the Energy Commission in time for consideration in the Preliminary Report, there is ample justification for requiring the NOI document to contain the appropriate data in sufficient detail to allow an adequate analysis by the PUC. This need is enhanced by the fact that the Energy Commission Staff analysis is significantly dependent on the review and anal-

ysis performed by the PUC and on close coordination between the two Staffs.

Review of the NOI by the PUC indicates that "the NOI appears substantially deficient in many areas of major concern to the California Public Utilities Commission." The following is a summary of the principal data inadequacies identified by the PUC. Where appropriate, the summary has been expanded to include similar or related inadequacies identified by the Energy Commission Staff.

1. *Participation by Other Entities*

The NOI does not identify either known or potential participants in the total project, the likely extent of participation by other participants is not provided. The document states that PG&E "has the financial capacity and the electric power needs to absorb the portion of the project that is not acquired by the others." However, no substantiation for this conclusion is provided, nor are the financial capacity and electric power needs of potential participants stated. Possible financial arrangements for joint participation are not discussed. The advantages and disadvantages of joint venture financing, for example, are not discussed. There is no discussion of how the extent of participation by others will be determined.

2. *Reliability*

a. Information explaining the rationale for selecting 1200 megawatt size units compared with other available sizes is not provided. The relationship of unit size to reliability is not discussed.

b. The information on the feasibility of using available quantities of water for power plant cooling purposes is insufficient to determine its impact on plant reliability.

c. The NOI fails to provide a discussion of the advantages and disadvantages of alternative nuclear plant vendors in terms of the relative reliability achieved by plants from each vendor and the quality of reliability programs offered by each. No comparison of the capabilities of alternative vendors to provide remedial action in the event of reliability problems is provided.

d. The NOI contains no discussion of whether the proposed facilities will be of standard design with ascertainable histories of reliability. If a non-standard design is possible, no assessment of potential impacts on reliability is provided.

e. The NOI does not contain an assessment of the effects on cost of service and loss of load probability if, over the operating life of the facility, the anticipated capacity factor is not achieved.

3. *Financial and Rate Implications*

a. The NOI does not contain an assessment of the probabilities associated with the risks, uncertainties, and longer lead times to which nuclear plant construction is subject. Nor does the document describe the impacts on customer rates and capital financing of the range of potential circumstances that may extend the construction period, delay operation after construction, or totally preclude the plant from operation after it is built.

b. The NOI does not provide sufficient information on capital expenditures by project participants to allow the PUC to assess whether PG&E has the ability to finance this and other proposed facilities without extraordinary rate relief. The potential need for financing through allowance of "construction work in prog-

ress" (CWIP) in rate base or higher allowable rate of return is not discussed in the NOI.

c. The NOI does not provide a justification for the assumed escalation rates for fuel costs, nor does the document assess the sensitivity of operating costs to varying escalation rates.

It is apparent that the data deficiencies identified by the PUC cover areas of critical importance to both Commissions. Neither the PUC nor the Energy Commission Staffs can be expected to provide an adequate analysis of the proposed facilities in the absence of this information.

Water Quality

The NOI does not provide, in sufficient detail for planning purposes, data to assess the disposal of cooling system wastes (from blowdown and treatment facilities) for each site. Since the Staff must assess the viability of brackish water as the Applicant's preferred source for plant cooling, the alternate water supplies, conveyance systems, storage, treatment and blowdown facilities must be evaluated for their feasibility and compatibility with each site and related plant facilities from a technical, environmental and reliability standpoint.

The brackish water source alternatives proposed cannot be evaluated without data describing their quality, the treatment processes considered, the compatibility of these alternatives with the power plant cooling cycle and the waste products associated with these processes. Specifically, the NOI does not provide plans in sufficient detail for the proposed evaporation ponds, water treatment facility wastes and ultimate disposal of accumulated salts to determine whether applicable California Water Quality Control Board requirements can be satisfied. This determination is critical to the viability of the proposed sites and the supporting

information is required by section 1703(a)(8). The permit requirements for waste disposal and discharge facilities, including applicable regulatory jurisdiction over the Kesterson Reservoir, were also not discussed as required by section 1703(a)(11).

Cooling Water Systems, Conveyance and Blowdown

The NOI contained no baseline environmental and land use data on the proposed and alternate water conveyance (supply and blowdown) corridors for the three sites. In addition, there was no discussion of the reliability considerations given to selection of the water supply and corresponding cooling water and water conveyance facilities from the alternatives available. Without this information and an explanation of the considerations given to these factors in selection of the preferred water sources, cooling technology, and conveyance corridors, the Staff can neither analyze the acceptability of these vital facilities and their relative advantages and disadvantages, nor determine the impact these various alternatives would have on overall site suitability and the ability of the plant to operate efficiently and reliably.

Transmission

The NOI contained no justification for, or supporting analysis on the Applicant's transmission needs, such as load flows, line losses, reliability and costs, which describe the reasons for selecting the alternative substations for points of delivery of power from the proposed power plant. This information is required by section 1703(a)(9) of the NOI regulations. In addition, inadequate baseline data and analysis was presented to allow the Staff to evaluate the suitability of the proposed corridors to accommodate the proposed transmission facilities, particularly in terms of land use compatibility and potential environmental constraints.

Social/Economics

The NOI does not contain adequate supporting information on the potential fiscal impact of the project on surrounding major taxing jurisdictions. Without this data, the Staff cannot identify or evaluate the relative social, economic and institutional advantages and disadvantages of each of the alternative sites along with potential measures to mitigate those impacts. This information is required pursuant to section 1703(a)(8) of the NOI regulations to allow the evaluations required by sections 25506, 25509(c), and 25512(b) of the Act.

In addition to these major inadequacies, there is significant supplemental data required in nearly all of the technical areas. These data inadequacies include failure to: provide analysis to support conclusions, describe planning assumptions, clarify statements and describe analytical techniques presented in the NOI. Although these items alone would not necessarily have resulted in returning the NOI, the constraint they impose on the Staff's ability to begin and continue meaningful analysis of the NOI contributed to the overall decision on data adequacy. The following is a list of examples of data items which were not in the NOI which are necessary for the Staff's analysis.

1. Revision of the data base concerning regional historic seismicity to include seismicity associated with the Foothills Fault System.
2. A timeline indicating the dates and progression of events that would culminate in final on-site and off-site emergency response plans that are complete and ready for testing.
3. Anticipated legal means of acquiring access (easement, purchase, lease back, fee simple) for con-

structing the facility and conveyance systems at each of the proposed sites.

4. Salinity of water to be stored in the standby cooling reservoir and proposed methods of protecting ground water if saline fluids are to be stored.
5. Substantiation and documentation for the magnitude of the 0.45 construction employment multiplier and the 1.5 operation employment multiplier.
6. Transmission line corridor maps identifying areas of high visual impacts (e.g. urban areas, natural areas, landscape preservation areas, etc.).

Although not a reason for returning the NOI, the methods used in referencing documents in the NOI constrained the Staff's ability to review the references to determine their applicability to conclusions reached in the document. For future guidance in resubmitting this NOI or any other, documents should only be referenced if they directly support or amplify conclusions or analysis presented in the NOI. These references should be specifically cited in the text of the NOI along with an indication of their relationship to the subject under consideration. In addition, pursuant to California Administrative Code section 1706(b), five copies of any document not available at a public library or governmental agency in the city or county of Sacramento must be submitted with the NOI.

Recognizing that various aspects of the project are in different stages of the planning process, some of the plans and system alternatives posed in the NOI may be decided upon by the Applicant prior to resubmittal. In preparing for a resubmittal of this NOI, the Staff would recommend that any such decisions PG&E makes prior to refiling be fully identified and that the alternatives weighed and the decision-making process employed be fully discussed.

You will receive under separate cover:

1. A check in the amount of $24,000.00 returning the filing fee;
2. All copies of the NOI except those retained for Commission files and those copies that we are unable to have returned from other state agencies;
3. Three copies of the accompanying references; and
4. A detailed report of the data adequacy findings.

After the Company has received and analyzed the detailed description of the data adequacy findings, I suggest that it would be beneficial for Commission and PG&E Staff to meet publicly to discuss further the informational requirements of an adequate NOI.

Sincerely,

/s/ Loyd Forrest
LOYD FORREST
Executive Director

Attachment

[Letterhead]

Public Utilities Commission, State of California.

ERCDC Docket
No. 77-NOI-3

September 21, 1977

Mr. Keith Schwartztrauber, Project Manager
Energy Resources Conservation and
Development Commission
1111 Howe Avenue
Sacramento, California 95825

Dear Mr. Schwartztrauber:

In response to the letter of September 2, 1977 from Mr. Forrest requesting data adequacy review of PG&E's NOI for the proposed Stanislaus Nuclear Project, following are the major areas in which we feel the submittal is deficient.

1. Lack of information on participation by other parties. PG&E only states that it "has the financial capacity and the electric power needs to absorb the portion of the project that is not acquired by others". Advantages and disadvantages of joint venture financing should be addressed. (Ref. p. I-2)
2. What criteria will be used in determining which other utilities or entities should participate and to what extent in a joint venture.
3. Lack of justification of nuclear over alternative plant-types such as coal. In addition, variables in nuclear fuel cost escalation should be analyzed in comparing alternate plants. (Ref. p. III-42)
4. No substantiation of plant size, compared to other available sizes and the relation of size to reliability considerations. (Ref. p. II-4)

5. No firm commitments on water appear to have been made, rather only indications of such availability. (Ref. p. III-3)
6. No discussion is offered comparing nuclear plant vendors in relation to advantages and disadvantages of each vendor's plants, as well as remedial action available or contemplated to improve reliability or other problems. Furthermore, no discussion is made relative to whether the proposed plant is a standard design, custom design, or variation, and why the specific design was chosen.
7. Insufficient detail is offered on the reliability improvement programs discussed briefly on pages IV-6 and 7.
8. If the capacity factor differences between nuclear and coal-fired plants is indeterminate at this time, what would be the effects on cost of service, loss of load probability, etc., if the difference proves significant?
9. The risks, uncertainties, and longer lead times of nuclear plant construction should be quantified in terms of probabilities and the effects on rates and capital financing requirements should be determined for all eventualities, including if the proposed plant is built and not allowed to operate.
10. The capital budget of PG&E through 1990 is needed in order to assess the ability of the company to finance this or other proposed projects without relief in the form of CWIP in rate base or higher allowable rate of return, or a variation of these methods.
11. Justification should be furnished for the 6% escalation rates used for nuclear and coal, especially in view of the recent history of nuclear fuel costs. In

addition, the effects of substantially different escalation rates should be assessed for both nuclear and coal-fired plants.

In summary, the NOI appears substantially deficient in many areas of major concern to the California Public Utilities Commission.

Very truly yours,
/s/ Phillip E. Blecher
PHILLIP E. BLECHER
Executive Director

APPENDIX 10.

Data Adequacy Report.

DOCKET NO. 77-NOI-3

PACIFIC GAS & ELECTRIC COMPANY

STANISLAUS NUCLEAR PROJECT

NOTICE OF INTENTION (NOI)

STAFF REPORT ON DATA ADEQUACY

ENERGY RESOURCES CONSERVATION AND DEVELOPMENT COMMISSION

NOVEMBER 1977

1.0 *INTRODUCTION AND GENERAL DISCUSSION*

The Pacific Gas and Electric Company (hereinafter the applicant) filed with the State Energy Resources Conservation and Development Commission (ERCDC or the Commission) a Notice of Intention (NOI) to file for an application for Certification for the Stanislaus Nuclear Project on August 30, 1976 (Docket No. 77-NOI-3). The Notice proposes a 2400 megawatt electric nuclear plant to be located at any one of three alternate sites in Stanislaus County, Merced County or Madera County. The proposed sites are based upon regional studies conducted within the Central Valley area of California extending from Chico to Bakersfield. The proposed sites are considered suitable by the applicant to offer favorable and licensable geological, environmental and engineering characteristics.

The NOI contains information and statements which assert that over 5000 megawatts of new electrical generating capacity will be needed in the late 1980's and that the construction of two 1200 megawatt electric nuclear units, at one of the three alternative sites, is an acceptable and preferable method for meeting a substantial portion of this

need. The applicant states that the proposed project would satisfy approximately one-fourth of the capacity needed by 1990 according to the Commission's "most likely forecast". The two nuclear units have been scheduled for commercial operation in 1988 and 1989. Current plans for the sites by the applicant do not include further development beyond the two units proposed. Any future development would be the subject of another Notice.

Pacific Gas and Electric Company plans to build the plants under a "joint venture" basis with unspecified participation by public power agencies or investor-owned utilities. Ownership and financing arrangements for the project would be on a tenancy-in-common basis with the applicant acting as designer, constructor and operator.

The proposed power plant sites were selected by the applicant utilizing siting criteria which include factors such as coastal legislation considerations, geologic and seismic feasibility, cooling water availability and effluent restrictions. Site studies have been conducted by the applicant in three large regions located in the east Central Valley. The Stanislaus County site was studied in extensive detail to satisfy USNRC requirements. The Merced and Madera County sites were not studied in such detail on the basis that the latter constitute a "reserve inventory" of sites without preferred status.

The power plant proposed would consist of two 1200 megawatt nuclear units using either a Pressurized Water Reactor (PWR) or a Boiling Water Reactor (BWR) employing slightly enriched uranium dioxide fuel. The plant would be located within an exclusion area and would consist of a complex of structures required for power generation, safety, waste and fuel handling, cooling, and plant servicing. Related facilities would include cooling towers, evaporation ponds, spray ponds, electrical switchyards,

makeup water and waste water conveyance systems, makeup water storage reservoirs and transmission facilities. The applicant has offered three alternative transmission corridors for each proposed power plant site amounting to approximately 410 lineal miles of transmission corridor. The applicant proposes to apply appropriate federal, state, regional and local standards, ordinances and laws in the design, construction and operation of these facilities. The applicant asserts that considerable potential exists for enhanced plant availability through the use of standardized designs and industry programs aimed toward improvements in system and component reliability. The applicant has not, at present, selected the major equipment and system suppliers for the project. However, the applicant contends that the Company has the safety experience, scientific personnel, technical competence and knowledge in radiation safety, nuclear design and operation to ensure that the plant can be built and operated without undue risk to public health and safety.

In reviewing the Notice, the Commission Staff conducted a detailed data adequacy evaluation to determine whether the applicant provided sufficient information required by the Warren-Alquist Act, the Commission's NOI regulations and applicable portions of the Commission's Biennial Report. The first step in the Staff review was a determination of whether the Notice addressed, in some fashion, each of the numerous informational categories specified in the Public Resources Code and the Commission's NOI regulations. Members of the Commission's Technical Staff and representatives of appropriate state agencies reviewed the document to determine whether the information in the NOI was presented in sufficient detail to permit adequate staff analysis of the proposed alternative sites and related facilities. The General Counsel's Office reviewed the Staff's NOI assessment in order to assure that the criteria used to de-

termine the adequacy of the NOI, as well as the documentation in the NOI, were consistent with the provisions of the Warren-Alquist Act, the Commission's NOI regulations, and the Commission's Biennial Report.

On September 29, 1977, the Executive Director of the Energy Commission announced his decision to return the Stanislaus Nuclear Project Notice of Intention to Pacific Gas and Electric Company. The decision, which resulted after an initial 30-day review, was based upon a finding that the NOI did not contain information required by Commission regulations in sufficient detail to permit an adequate staff analysis.

The results of the Commission's Staff assessment of the adequacy of the Stanislaus Nuclear Project NOI are reported in the following sections. Section 2.0 contains a list of the data deficiencies and omissions which led to the decision to return the NOI. Correction of these deficiencies and omissions is considered essential by the staff for an adequate NOI filing.

The data adequacy evaluation presented in this report is organized by technical area subsections with a brief characterization of the data inadequacies, reference to applicable portions of the NOI and a listing of the specific data inadequacies and/or omissions identified by the Staff. These data adequacy findings represent a thorough and complete review of the Stanislaus Nuclear Project NOI. However, this report should not be interpreted to limit or restrict the Staff's ability to seek and obtain further information, as required, during the NOI review process.

2.0 *BASES FOR RETURN OF NOTICE*

The NOI asserts that each of the three alternative sites presented is both suitable for the nuclear power plant facilities proposed and licensable under relevant regulatory

requirements. The NOI further claims that the proposed sites and related facilities are the result of a thorough selection process. However, the conclusions presented in the NOI are not accompanied by an adequate explication of the criteria, analysis, comparisons and data relied upon by the applicant in arriving at the conclusions and assertions presented in the document. As a result, the thoroughness and validity of the applicant's planning and decision-making process employed for this NOI cannot be adequately assessed. Under these circumstances it is unlikely that the Staff will have the ability to evaluate the acceptability of the proposed sites and related facilities, and the preferability of the proposals over reasonable alternativs, within the time limitations of the Warren-Alquist Act.

The technical basis for the return of the NOI is explained in the following subsections. The Staff finds that the data inadequacies in these areas preclude the Staff from performing an adequate analysis.

2.1 *SAFETY AND RELIABILITY* (Applicable to all sites)

The Notice of Intention (NOI) does not contain adequate information concerning the safety and reliability of the proposed facilities. The information required by the Warren-Alquist Act and the Commission's NOI regulations is either not provided for in key safety and reliability areas, or is not presented in sufficient detail to allow an adequate Staff analysis of the NOI.

Section 25511 of the Act reveals a clear legislative intent that safety and reliability be subject to a degree of scrutiny not generally required for other matters considered in an NOI. While the requirements for the contents of an NOI are set forth in general terms in Section 25504 of the Act (as well as Section 1703 (a) of the Commission's NOI regulations), Section 25511 expressly requires that detailed in-

formation be provided in the NOI on matters relating to safety and reliability. Thus, while consideration of other subject areas may occasionally require detailed analysis in order to resolve critical issues of site or facility acceptability, the Legislature has given explicit recognition to the presumption that determining the acceptability of sites and related facilities will always require a detailed examination of safety and reliability issues.

The relevant portions of Section 25511 are as follows:

> "... the Commission shall ... require detailed information on proposed emergency systems and safety precautions, plans for transport, handling and storage of wastes and fuels, proposed methods to prevent illegal diversion of nuclear fuels, special design features to account for seismic and other potential hazards, proposed methods to control density of population in areas surrounding nuclear power plants, and such other information as the Commission may determine to be relevant to the reliability and safety of the facility at the proposed sites."

After careful review of the safety and reliability information presented, the Staff has concluded that the document does not contain information relating to these areas in sufficient detail to allow the Staff to perform the level of analysis clearly mandated by the Warren-Alquist Act.

2.1.1 *Health and Safety: Nuclear Fuel Cycle*

Section IV.B.8

Although the NOI included a discussion of emissions, the discussion is limited to emissions from the reactor itself. No information is provided on the nature and extent of the emissions from other portions of the nuclear fuel cycle. While the applicant is not directly responsible for all parts

of the fuel cycle, the applicant should be able to cite available information regarding the health and safety effects of the nuclear fuel cycle.

Specific Date [sic] Inadequacies and/or Omissions

1. Estimates of the radiation emissions from the uranium fuel cycle normalized to annual LWR fuel requirements by type, source and fuel cycle activity with appropriate reference to information sources.
2. Tabulation of effluent sources in curies for gaseous, liquid and solid emissions and comparison with estimates made by other studies or regulatory evaluations (e.g., 10 CFR 51).
3. Indication of the impact these emissions have in terms of health effects and a discussion of the method of calculating these health effects for both public and radiation workers (i.e., model for dose computation).

2.1.2 *Spent Fuel Storage and Handling*

Pages IV-49, 61

The NOI does not discuss the consequences of the accumulation of spent fuel on-site in the event that operating reprocessing facilities or off-site storage facilities are insufficient or unavailable. The applicant has not discussed the consequences of this accumulation such as the potential need to remove and ship fuel rapidly. The applicant also has not addressed sufficiently the measures to ensure adequate storage capacity.

Specific Data Inadequacies and/or Omissions

1. Estimates of spent fuel storage pool capacity, including: number of fuel assemblies capable of being stored, cooling water requirements, clean-up system requirements, and length of time the reactor can be

operated and refueled without shipping spent fuel off-site while maintaining full core discharge capacity.

2. Explanation of the basis for the proposed spent fuel pool storage capacity, specifying the consideration given to such factors as: advantages and disadvantages of on-site versus off-site storage of spent fuel elements, expected availability of off-site storage capacity, expected capacity and availability of spent fuel transport casks, plans for spent fuel storage capacity expansion at a future date, and other factors considered by the applicant in determining the adequacy of spent fuel storage capacity.
3. Anticipated measures for mitigating fuel handling accidents such as fuel bundle drop, cask drop, loss of cooling or water clean-up systems, and expected changes in fuel handling requirements due to storage of fuel in "dense rack" configurations (if planned) for long periods of time (e.g., 10-40 years).
4. Characterization of the spent fuel inventory over the lifetime of that plant, with projections of heat loads and activity levels which account for reactor discharges, off-site shipment and decay over the life of the plant.
5. Analysis of the effect of long storage time, dense-rack storage configurations and cladding deterioration on the spent fuel basin systems including the potential need for rapid evacuation of the pool.
6. Projected requirements for, and availability of, spent fuel shipping casks over the lifetime of the plant, including descriptions of required numbers of shipping casks, types of casks required, available spent fuel carriers and availability of truck or rail transport capability.

2.1.3 *Comparative Health and Safety*

Sections III.F and IV.B.3

The applicant has provided an analysis of the consideration given to economics in comparing the proposed nuclear plant to coal, geothermal, and combined cycle alternatives, but no information has been provided to permit a determination of how health and safety concerns affected the applicant's decision to choose nuclear power generation over these alternatives.

Specific Data Inadequacies and/or Omissions

1. Discussion of the consideration given to comparative health and safety of available generation alternatives in the decision to choose a nuclear power plant for this NOI.
2. The health and safety data used in arriving at this decision.

2.1.4 *Radiological Health Effects*

Section IV.B.3

The NOI contains inadequate information regarding the environmental pathways that radioisotopes released by the plant might take given the specific environments of the proposed sites. While the NOI acknowledges the role environmental pathways have in affecting total health effects, no information was presented on the specific environmental pathways likely to be important for the three proposed sites. No information was presented on the dose commitment period used to calculate estimates of health effects, especially for long-lived isotopes, since the period chosen may result in varying estimates of the total resulting health consequences to a given radioisotope release.

Specific Data Inadequacies and/or Omissions

1. For each proposed site, an evaluation of the particular environmental pathways that might act to concentrate radioactive plant emissions or result in radiation exposure to the public.
2. Estimates of the radiation dose to the public and workers from one year of operation of one unit of the proposed plant at each site. The results may be expressed for a typical BWR and a typical PWR if plant design type is uncertain.
3. Indication of the method of analysis, the environmental pathways considered and the dose commitment period utilized for the above estimates including the sensitivity to this parameter.

2.1.5 *Decommissioning*

Section IV.B.7

The NOI provides a recitation of four commonly discussed methods of decommissioning without providing information on the applicant's planning for, and consideration given to, decommissioning, including methods of handling radioactive materials present following plant shutdown, provisions to maintain security and custody if protective storage is employed, mechanisms to ensure eventual dismantling and site restoration if necessary, and requirements for the ultimate disposal of decommissioning wastes.

Specific Data Inadequacies and/or Omissions

1. Estimates of the radioactive materials present in major components, including their form and activity following final plant shutdown and after periods of protective storage.
2. A listing of those plant components whose radiation levels are expected to necessitate permanent disposal

of radioactive materials remaining after periods of mothballing or entombment.

3. A discussion of requirements for long-term security and custody at the site considering decay of activation products and the need to maintain surveillance and protection.
4. Identification of when long range plans will be developed by the applicant for:
   a. Mothballing, entombment, or dismantling.
   b. Permanent disposal of decommissioning wastes.
   c. Ultimate restoration of the site.

2.1.6 *Emergency Planning*

Section IV.B.6 (All Sites)
Section V.A.5.g (Stanislaus Site)
Section VI.A.5.g (Merced Site)
Section VII.A.5.g (Madera Site)

The NOI does not include a discussion of the major factors for each site which would affect emergency response capabilities and requirements. Inadequate information was provided on the capability of local health facilities to receive and treat contaminated and/or injured patients resulting from an emergency or an on-site or off-site release of radioactivity. The capability of local emergency services organizations to respond to an evacuation or other emergency resulting from an off-site release was also not provided.

Specific Data Inadequacies and/or Omissions

1. Identification of the major related factors which will be considered in development of site specific emergency plans including evacuability of the low population zone and capabilities of local community services to respond.

2. Designation of the health facilities being considered for accepting utility personnel injured and/or contaminated at the plant.
3. Designation of other health facilities that would be utilized in the event that members of the general public are injured and/or contaminated as a result of an accident situation.
4. Identification of those health facilities discussed in Items (2) and (3) that would be in need of funding, additional personnel and training in order for the health facility to be equipped to plan for and accept on-site and off-site accident victims.
5. Designation of the primary local emergency response agency for each county within a fifty mile radius around each site.
6. For those agencies identified in Item (5) above, a designation of those that would be in need of funding, additional personnel, and training in order to be equipped to plan for and respond to an accident situation.
7. A timeline that indicates the dates and progression of events that would lead up to final on-site and off-site emergency response plans complete and ready for testing before the plant begins operation.

2.1.7 *Population Density Control*

Section IV.B.1.c

While the NOI identifies the general plans of the three counties in which the proposed sites are located, no analysis is presented and the applicant fails to identify contingency plans which will be used in the event that the general plans are ineffective in controlling population density. In addition, the NOI fails to identify methods of monitoring population density trends around the plant.

Specific Data Inadequacies and/or Omissions

1. The proposed method of monitoring population density trends around each site.
2. The proposed methods to control population density around each site.
3. Analysis of the capability of local General Plans to control population density around each site. A contingency plan which will be employed in the event that local General Plans prove ineffective.
4. Designation of the exclusion area radius, low population zone radius and population center distance (as defined by 10 CFR 100) for all sites.
5. Population density calculated to a distance of 30 miles in 22½ degree sections radiating in 16 directions from the sites. The population densities should be computed by dividing the cumulative population figure at a specific distance by the area of the sector that corresponds to the distance.

2.1.8 *Reliability Factors*

Sections IV.A, and IV.B.2

The NOI does not contain sufficient information indicating the actual reliability experience at comparable nuclear plants and the recorded and anticipated impact on reliability due to abnormal conditions, component failure, build-up of radioactive materials, or inability of the plant to meet operating specifications. Other factors such as the effects of plant size on reliability were also not discussed.

Specific Data Inadequacies and/or Omissions

1. A review of the reliability experience for other nuclear plants, including description and analysis of the number, size, age, design (BWR vs. PWR) and operating experience gained for plants surveyed.

2. Measures to avoid buildup of radioactive "crud" in plant systems which may lengthen outages.
3. Measures proposed to maintain reliable spent fuel storage capacity to allow discharge of spent fuel for the life of the plant without risk of shutdown of the reactor until fuel can be shipped off-site.
4. The intentions of the applicant to design structures, systems and components essential to reliable generation of power (in addition to those safety-related items which are subject to USNRC regulation) to withstand earthquake induced forces and remain operational thereafter.

2.1.9 *Reliability Comparisons*

Pages IV-4,5,6

Information explaining the rationale for selecting 1200 megawatt size units compared with other available sizes is not provided. The relationship of unit size to reliability is not discussed. The NOI fails to provide a discussion of the advantages and disadvantages of alternative nuclear plant types and sizes in terms of the relative reliability achieved and the quality of reliability programs offered by the nuclear industry. The NOI contains no discussion of whether the proposed facilities will be of standard design with ascertainable levels of reliability. If a non-standard design is selected, no assessment of potential impacts on reliability is provided.

Specific Data Inadequacies and/or Omissions

1. A comparison of nuclear reactor types, sizes, design and available plant design options offered by the nuclear industry and the degree to which reliability parameters are being considered in evaluating these designs.

2. A discussion of the evaluation procedures employed including the range of reactor ratings to be considered together with the relative economic and technological advantages and disadvantages weighed when making the selection.
3. A discussion of the Applicant's plans to incorporate reliability design improvements, as mentioned in the NOI, by specifically identifying improvements the Applicant intends to make.
4. Plans by PG&E to implement the reliability improvement programs offered by industry as referenced in the NOI.
5. A comparison of reliability advantages and disadvantages of custom built versus standardized plant designs, including factors such as available industry offerings for the nuclear steam supply system, balance of plant options and major equipment or components.
6. Discussion of the factors to be considered in the Applicant's decision whether or not to select facilities of standardized design which may offer reliability improvements over nonstandardized design.

2.1.10 *Safety Comparison*

Pages III-11, IV-4,16
Sections III.B.1, IV.B.2

Since the NOI indicates that the Applicant has not yet selected between a boiling water reactor system and a pressurized water reactor system, any resubmitted NOI should include: a detailed comparison of these two reactor types for each of the applicable safety considerations addressed in Section 2.1; and an identification of the criteria applied to health and safety factors to be used in selecting the nuclear reactor system.

Specific Data Inadequacies and/or Omissions

1. A comparison of available reactor safety experience accumulated by other nuclear plants including system malfunctions and incident reports for BWR and PWR facilities. Identification of the plants surveyed, owner, type, age, size, major manufacturers and architect-engineers.
2. The relative capabilities of the major engineered safety features for BWR and PWR plants including comparative analyses of the performance characteristics of the following design features:
   a. ECCS, including analytical and performance uncertainties.
   b. Containment, including BWR suppression pool swell and PWR subcompartment design uncertainties.
   c. Pressure Vessel Integrity, including nozzle integrity, NDTT shifts with life and inspectability of the reactor coolant pressure boundary.
   d. Leakage Control between systems containing radioactive materials, including the integrity of interface boundaries between systems that do not contain radioactivity, the integrity of (PWR) steam generator tubes and the efficacy of (BWR) systems to control off-gas releases from direct cycle condenser cooling systems.

2.1.11 *Fuel Availability*

Page III-21

The NOI does not provide sufficient data to enable the staff to assess the availability of domestic and foreign raw uranium resources, mining and milling capacity, and enrichment capacity. A more detailed assessment of fuel avail-

ability which addresses these factors should be provided in order to permit an analysis of long-term reliability of this proposed supply of electricity.

Specific Data Inadequacies and/or Omissions

1. An evaluation of the availability of uranium ore in the context of total domestic requirements given that there may be no reprocessing of spent reactor fuel.
2. A discussion of the availability of adequate enrichment capacity throughout the life of the plant and the Applicant's plans for procurement of enrichment services.
3. A discussion of plans by industry for opening new mines and mills to provide fuel.
4. A discussion of the Applicant's fuel procurement program including domestic and foreign supply plans for the initial core, reload fuel and long-term commitments to be established to ensure reliable supply of fuel.

2.2 *NEED*

Chapter II and III (All Sites)

The information contained in the NOI is insufficient to permit an adequate Staff analysis of whether a need will exist for 2400 megawatts of additional generation capacity in the late 1980's and whether the proposed nuclear facilities are acceptable and preferable choices given the range of alternatives available to the Applicant. The data inadequacies identified under this heading include inadequately documented planning load and reserve margin assumptions, the failure to identify known or likely participants and their energy needs, a totally inadequate discussion of the potential

impacts of non-generation alternatives on the need for capacity and energy, and an inadequate discussion of potential generation alternatives to the proposed facilities.

2.2.1 *Demand Reserve Margin*

Page Ii-5, Table II.D-1

The NOI does not contain any data or analysis explicating or justifying the reserve margin levels assumed for resource planning purposes. Reliability criteria are briefly described but a justification for using probability factors in conjunction with the reliability criteria in the determination of resource needs is not provided.

Specific Data Inadequacies and/or Omissions

1. Analytical justification and calculations necessary to verify the "reasonableness" of the 20 percent reserve margin level referred to in the NOI and used for determining "future capacity requirements" in Table II.D-1. This should include:
   a. Calculations of the impact on reserve margins resulting from the following variables:
      (1) Load uncertainties
      (2) Schedule delays
      (3) Maintenance and overhaul
      (4) Generation malfunctions
      (5) Transmission malfunctions
      (6) Extreme weather conditions
      (7) System load characteristics
      (8) Pooling
      (9) Forced outage rate, and
      (10) Other variables which are pertinent and applicable
   b. Description and justification for all assumptions used in the calculations.

2. Description of the extent to which any of the factors in Item 1 above are considered in PG&E's Reserve Criteria described in Section II.C.2. of the NOI.

2.2.2 *Demand Forecast Adjustments*

Table II.B-2

The NOI contains information indicating the adjustments that should be made to the adopted forecast to arrive at the PG&E service area demand. These adjustments include "dry year adders" and special loads and losses not accounted for in the forecast. Although the numerical adjustments are provided, the substantiation for these adjustments is not. These adjustments have not been verified in any previous Commission proceeding.

Specific Data Inadequacies and/or Omissions

1. Detailed description of the methods, assumptions, calculations and the data base used by PG&E, plus all other information, to determine dry-year adder adjustments (a megawatt accounting), including justification for using these adjustments on a continuous yearly planning basis. This will require data and documentation equivalent to that requested in form E-19 of the Common Forecasting Methodology II forms and instructions package. The instructions for this form are found under Item 2, below.
2. *Form E-19 Bridge Between Demand and Supply*

   Form E-19 shall delineate all adjustments needed to develop the utility's total planning area loads. That is, every adjustment made from demand Forms E-16 and E-17 to obtain the loads indicated on line 1 of supply Forms R-1A and R-2A shall be itemized and documented. Utilities with interruptible rate schedules or contracts shall deduct the interruptible portion of

the peak load. The growth in interruptible adjustments shall be itemized by rate schedule and number of customers as well as the total KW adjustment. Special adjustments made to the planning area load for "dry year" basis shall also be itemized and fully documented.

2.2.3 *Conservation Potential*

Section II.F and II.G

The data presented in the NOI is not adequate to enable the Staff to determine the levels of energy savings and demand reduction that can be reasonably and cost-effectively obtained through existing and expanded conservation and load management programs by the completion date of the proposed facilities. Nor does the NOI contain sufficient data from which the Staff can assess whether the proposed additional generating capacity will produce greater net benefits when compared with feasible demand reducing alternatives.

Specific Data Inadequacies and/or Omissions for Conservation

1. Levels of energy saving and demand reduction that may be achieved by completion date of the project in the residential, commercial, industrial, and agricultural subsectors of the PG&E service area, by conservation programs.
2. Estimated resources required to obtain those results including program costs in each of the program areas.
3. Assumptions, methodologies, data and calculations by which savings and resource estimates were derived.

Specific Data Inadequacies and/or Omissions for Load Management/Rate Design

1. Estimates of demand reduction and energy savings to be achieved through load management and rate design programs by completion of the project.
2. Estimates of costs of achieving identified savings.
3. Assumptions, methodologies and data used in calculating savings and costs.

2.2.4 *Participation by Other Entities*

Pages I-2 and 3

The NOI does not identify either known or potential participants in the total project. The likely extent of participation by other participants is not provided. The document states that PG&E "has the financial capacity and the electric power needs to absorb the portion of the project that is not acquired by the others." However, no substantiation for this conclusion is provided, nor are the financial capacity and electric power needs of potential participants stated. Possible financial arrangements for joint participation are not discussed.

Specific Data Inadequacies and/or Omissions

1. Names of those parties who have expressed a desire to participate with PG&E in the Stanislaus project.
2. Names of utilities who have contributed to studies for the project.
3. Names of utilities who have indicated to the Applicant an intent to trade water for share in the ownership of the project and a discussion of the content and status of any such arrangements.
4. Anticipated levels of participation (in percentage and dollar amounts) by other investor-owned utilities and public agencies.

5. Discussion of the timetable for, and means of, finalizing the extent of participation by other investor-owned utilities and/or public power agencies.
6. Identification of financial arrangements (planned or potential) for ownership participation including, but not limited to, timing for financial commitment by participants and indication of whether the arrangements call for power trading, purchase of on-peak or off-peak power, etc.
7. Analysis of the financial implications of the arrangements identified in Item 6.

2.2.5 *Financial and Rate Implications*

A. *Project Financing*

Section III.F.3

The NOI does not provide sufficient information on capital expenditures by project participants to assess whether PG&E has the ability to finance this and other proposed facilities without extraordinary rate relief. The potential need for financing through higher allowable rate of return is not discussed in the NOI.

Specific Data Inadequacies and/or Omissions

1. Data and documentation similar or equivalent to that requested in Form R-12 and Forms R-16 thru R-24 (supply forms adopted by the Commission on October 26, 1977 for the Common Forecasting Methodology).
2. Data and documentation requested in the baseline scenario of the Financial Analysis Forms in the Common Forecasting Methodology adopted by the Commission on October 26, 1977.
3. An analysis of the effect that the delay and/or modification to any baseload project currently under construction or awaiting start-up would have on the rates,

the risk, and the Applicant's ability to finance the Stanislaus project.

4. An analysis of the effects of normal business risks such as cost overruns may have on project financing.

B. *Price-Anderson Liability Protection*

Section IV.A (All Sites)

The NOI does not include a discussion of the Applicant's ability to construct and operate the proposed plant in the event that liability protection under the Price-Anderson Act is removed. Discussions of the potential economic cost of an accident, and the economic impact on the Applicant's rate payers should the plant cease to operate because of the loss of liability protection are not included.

Specific Data Inadequacies and/or Omissions

1. A discussion of possible consequences including any threat to continue construction or operation of the plant which might result from a loss of Price-Anderson protections.
2. A discussion of the financial risk incurred by the Applicant by utilizing nuclear generation, compared with alternative generating technologies, if the liability protection of the Price-Anderson Act are [*sic*] removed. Include an analysis specifically showing the impact on the fixed charge rate for nuclear with documentation for the insurance charges.

C. *Decommissioning*

Section IV.B.7 (All Sites)

The NOI provides inadequate information on the costs of decommissioning. Since the costs of complete decommissioning, including dismantling and permanent waste

disposal, may amount to a substantial portion of the total cost of a nuclear plant, thorough and complete estimates of these costs need to be provided.

Specific Data Inadequacies and/or Omissions

1. Itemized cost estimates, in constant 1976 dollars, of the cost of complete decommissioning, including any dismantling and permanent waste disposal, for each of the options discussed by the Applicant (mothballing, entombment, and removal/dismantling).
2. A discussion of the Appellant's plans to finance decommissioning, including any special escrow funds to cover decommissioning costs and/or any proposed plans to cover decommissioning costs as part of the rate structure.

2.2.6 *Resource Alternatives — Geothermal*

Page III-40

The NOI contains conclusory statements asserting that geothermal development beyond that already assumed in the Company's resource plans is not achievable. The document does not contain any substantiation for these assertions, nor does it contain any supporting data from which the staff might determine the full extent of geothermal development that is achievable by the late 1980's.

Specific Data Inadequacies and/or Omissions

An estimate of the extent to which geothermal resources can be expected to meet PG&E's need for additional energy and capacity between now and 1990 including the data and/or analysis upon which the estimate is based. A discussion of this potential should consider at least the following:

1. A description and estimate of the maximum potential electric generating capacity achievable from geo-

thermal resources in the Geysers and other KGRAs within the PG&E service area.

2. A description of the anticipated rate of discovery of geothermal resources between now and 1990.
3. A description and explanation of the technical, environmental and regulatory constraints which the NOI claims will preclude further geothermal development in the Geysers area beyond the amount expected to be available by 1990.

2.2.7 *Conventional Resource Alternatives*

Page II-6 and Section III.F.1

The NOI contains a brief comparison of generation costs between nuclear, coal, and oil generating alternatives. However, this comparison is accompanied by little, if any, supporting documentation, analyses, or discussion of other factors important to a choice among alternatives. Specifically, there is little or no information describing the comparative environmental, social and institutional advantages and disadvantages of these basic generating alternatives. Without this basic information, the Staff can neither adequately assess the Applicant's choice of generating technology nor determine whether there are preferable alternatives to the Applicant's proposal.

Specific Data Inadequacies and/or Omissions

1. Data and analysis that can be replicated demonstrating the financial and technological reasons for rejecting other available technology alternatives by the Applicant.
2. The environmental advantages and disadvantages of other available feasible generation and non-generation alternatives to the Stanislaus Nuclear Project.

2.2.8 *Unconventional Resource Alternatives*

Section III.F

The NOI contains a series of brief conclusory discussions asserting the non-feasibility of various unconventional generation alternatives. The document does not contain either supporting data or the technology and inter-technology comparison for the assertion that solar, fuel cells, biomass, and solid waste resources are not feasible and potential alternatives for part or all of the new generation capacity proposed in the NOI. The NOI states that it may be prudent to include cogeneration in future resource planning and states that PG&E is pursuing this alternative. However, cogeneration resources are not included in the submitted resource plan nor is there any indication of the amounts of potential cogeneration capacity being pursued or the amounts which can be reasonably expected by the late 1980's. The document also does not reflect available information concerning the economic and technical feasibility of these alternatives.

A. *Biomass/Solid Waste*

Page III-40

The NOI does not contain the evidence or data to support the Applicant's contention that biomass is not a feasible alternative generation resource for this century.

Specific Data Inadequacies and/or Omissions

An estimate of the extent to which biomass technologies, including energy derivation from solid waste, can be expected to meet the need for additional energy and capacity in PG&E's service area between now and 1990, including the data and/or analysis upon which the estimate is based. A discussion of this estimate should include, as a minumum, the following:

1. A discussion of the potential energy that can be derived from the "several small plants" being considered for refuse derived energy, including an indication of the nature of the facilities under consideration, the amount of energy derivable from each, and the anticipated date of their availability.
2. A discussion of the potential energy derivable from other biomass sources, including the amount of energy currently produced from biomass in the PG&E service area, the cost at which the energy is produced or purchased, and an estimate of the amount of energy expected to be derived from these sources by 1990.

B. *Fuel Cells*

Page III-41

The Applicant has not addressed the status of fuel cell technology development, the plans for future development, and the relative advantages and disadvantages considered in concluding that this technology is unlikely to be a proven resource before the 1990's.

Specific Data Inadequacies and/or Omissions

An estimate of the extent to which fuel cells using natural gas, oil, or other fuels can be expected to meet PG&E's need for additional energy or capacity between now and 1990 including the data and/or analysis upon which the estimate is based. A discussion of this potential should consider at least the following:

1. A brief discussion of the "several small demonstration plants" planned for the late 1970's; their estimated size and amount of energy production.
2. A projection of the extent to which fuel cell technology will be able to meet capacity and energy needs by 1990.

C. *Solar*

Pages II-10 and III-40

The NOI does not provide an assessment of PG&E's consideration of solar energy alternatives in the resource plan. The NOI dismisses various solar alternatives without providing evidence to support the conclusion that solar energy is "unlikely" to be economic or capable of providing a feasible resource in the timeframe of the Stanislaus Project. The potential solar resource available, the assumptions, reference studies and analyses which support the Applicant's contention were not provided to permit the staff to make an independent assessment of the potential solar thermal, solar cells, and wind system contributions to the PG&E resource plan.

Specific Data Inadequacies and/or Omissions

An estimate of the extent to which various solar technologies mentioned in the NOI can be expected to contribute to the additional energy and capacity needs of the PG&E service area by 1990 including the data and/or analysis upon which the estimate is based. A discussion of this estimate should include, as a minimum, the following:

1. A general discussion of the extent to which solar resources can be utilized in the service area by 1990, including potential commercial and domestic solar system applications, wind resources, solar thermal and photovoltaic potential.
2. Estimates of the extent to which various solar technologies can be expected to meet the capacity and energy needs of the service area by 1990.

D. *Cogeneration*

Page III-42

The NOI suggests that it "may be prudent" to include some cogeneration in future resource plans. However, the NOI does not describe the future capacity additions anticipated within the PG&E service area relative to the proposed timeframe of the Stanislaus Nuclear Project.

Specific Data Inadequacies and/or Omissions

An estimate of the extent to which cogeneration can be expected to meet the need for additional energy and capacity in the PG&E service area by 1990, including the data and/or analysis upon which the estimate is based. The discussion should include at least the following:

1. The type and size of cogeneration facilities currently planned by PG&E and the expected dates for commercial operation.
2. Cogeneration capacity that can be achieved by PG&E and other participants by 1990.
3. Descriptions of the cogeneration program designed to reach these identified capacity levels; including short term and intermediate goals and a program outlined to achieve the anticipated resource levels.

2.2.9 *Resource Plan Implications*

Page II-6

The NOI failed to provide a resource plan compatible with the March 23, 1977, Commission adopted demand forecast. Information was not provided or referenced that describes PG&E's facility retirement schedule.

Specific Data Inadequacies and/or Omissions

1. A schedule of resource additions similar to Table II.D-2 of the NOI but based on the March 23, 1977 Commission adopted demand forecast.

2. The latest PG&E facility retirement schedule through 1995, including a comparison of the 1976 Optimal Generation Planning (OGP) schedule and justification for these changes. Identification of the plants and their capacities making up the 350 MW referenced in footnote 2 of the Table II.D-1 as existing capacity to be retired by 1988.

2.3 *WATER*

The staff must assess the viability of brackish water as the Applicant's preferred source for plant cooling. However, the NOI does not provide, in sufficient detail, the necessary information for a full assessment of the proposed water supply, use and disposal considerations for this project. The NOI also does not contain evaluations of the alternate water supplies, conveyance systems, storage, treatment and blowdown facilities for their feasibility and compatibility with each site and related plant facilities from a technical, environmental and reliability standpoint.

2.3.1 *Water Resources*

Section V.B Page V-136,147 (Stanislaus Site)
Section VI.B Page VI-107,111 (Merced Site)
Section VII.B Page VII-106,108 (Madera Site)

The basis for selection of reliable cooling water supplies must be provided to assess the proposed power plant sites.

Specific Data Inadequacies and/or Omissions

1. Identification of alternative water supplies for the Merced and Madera sites including their availability, reliability and quality.
2. Availability and reliability of agricultural drainage water from Kesterson Resevoir [*sic*] including the engineering study by Bookman-Edmonston (p. VI-

108) on availability of "poor quality" groundwater as a supplemental water source for the San Luis Drain.

3. A discussion of using San Luis Drain water as cooling water alternative for the Stanislaus site, including estimated costs for a water conveyance system to the site.
4. A tabulation of boron, pesticides, total and organic phosphate, total nitrogen and TDS concentrations in the water supplies and projections of these concentrations, by decades, for the life of the project.

2.3.2 *Water Quality and Waste Disposal*

The brackish water source alternatives proposed cannot be evaluated without data describing their quality, the treatment processes considered, the compatibility of these alternatives with the power plant cooling cycle and the waste products associated with these processes. Specifically, the NOI does not provide plans in sufficient detail for the proposed evaporation ponds, water treatment facility wastes and ultimate disposal of accumulated salts to determine whether applicable California Water Quality Control Board requirements can be satisfied. The permit requirements for waste disposal and discharge facilities, including applicable regulatory jurisdiction over the Kesterson Reservoir, were also not discussed.

A. *Treatment Processes and Waste Products*

Section V.B.3, Pg V-147, (Stanislaus Site)
Section VI.B.3, Pg VI-111, (Merced Site)
Section VIII.B.3, Pg VII-108 (Madera Site)

The NOI proposes the use of brackish water sources for power plant cooling. However, inadequate discussion was provided on treatment requirements, waste products gen-

erated, their disposal and compatibility with the power plant cooling cycle.

Specific Data Inadequacies and/or Omissions

1. Type of water treatment process proposed.
2. The waste prouucts generated by this water treatment process.
3. Method of disposal of treatment waste.
4. Data to support the feasibility of treatment process proposed, i.e., concepts, demonstration, pilot plants, cost of treatment.

B. *Evaporation Ponds*

Section III.B.4.b, Pg III-30, 31 (All Sites)
Section III.D.2, Pg III-37 (All Sites)

The NOI does not provide, in sufficient detail for planning purposes, data to assess the design criteria and disposal of cooling system wastes (from blowdown and treatment facilities) for each site. The NOI proposes the use of evaporations [*sic*] basins. Salts from the blowdown disposal will accumulate in an evaporation basin. Interim and ultimate disposal of the blowdown salts must be considered. These salts could be disposed of in a Class I disposal site or a Class II-1 disposal site. State law requires complete and indefinite protection of the quality of ground and surface water from all wastes deposited therein to protect against hazards to public health and wildlife resources. The NOI does not provide an adequate discussion of how the Applicant will meet these requirements.

Specific Data Inadequacies and/or Omissions

1. Design criteria for evaporation ponds including:
   a. Basis for sizing ponds, including evaporation assumptions.

b. Layout of ponds.

c. Permeability criteria used for design (see Item 2).

d. Leak detection methods proposed (see Item 3).

e. One-hundred-year flood frequency analyses for the proposed evaporation ponds (see Item 4).

2. Identification of how the proposed liner for Class I disposal site will meet a 1×10^{-8} cm/sec. or less permeability requirements, or if the site is a Class II-1 area, the ability to meet a 1×10^{-6} cm/sec. permeability requirement. A Class I or II-1 disposal site calls for the prevention of lateral or vertical continuity with usable groundwater sources coupled with a monitoring system which can detect a functional failure in any part of the lining.

3. Description of monitoring systems, equipment, monitoring points and analysis schedule to be used.

4. An evaluation of diking and freeboard requirements to assure protection from inundating caused by the 100-year flood.

5. Description of alternatives for ultimate waste disposal after decommissioning of the facility.

C. *Kesterson Reservoir*

Section V.A.6, Pg V-135 (Stanislaus Site)

Kesterson Reservoir is designated as an off-site blowdown disposal facility. The use of Kesterson Reservoir will require a discharge permit. The NOI does not provide the necessary waste disposal permit and regulatory jurisdictions involved.

Specific Data Inadequacies and/or Omissions

1. Identification of the appropriate regulatory agency that will be responsible for issuing a discharge permit

authorizing disposal of blowdown to Kesterson Reservoir.

2. Intentions of the Applicant to utilize Kesterson Reservoir as the final disposal site for the blowdown. Discussion of any alternate sites or the possibility that the blowdown will be conveyed elsewhere.

D. *Blowdown Quality*

Section III.B.4, Pg III-30 (All Sites)

Usable groundwater and other fresh water sources must be protected from potential brackish water contaminants present in the blowdown. The NOI does not provide listings of all the substances present which may affect the quality of usable water sources.

Specific Data Inadequacies and/or Omissions

1. A listing of heavy metals that will be present in blowdown.
2. A listing of other toxic substances that could significantly impair the quality of usable water, including but not limited to:
   a. Chlorides;
   b. Magnesium, calcium, potassium, sodium, aluminum;
   c. Sulfates;
   d. Corrosion inhibitors used;
   e. pH levels; and
   f. Radionuclides.

2.3.3 *Conveyance Systems*

No information was provided on the reliability considerations given to selection of the water supply and corresponding cooling water and water conveyance facilities from the alternatives available. Without this information and an

explanation of the considerations given to these factors in selection of the preferred water sources and conveyance corridors, the staff can neither analyze the acceptability of these vital facilities and their relative advantages and disadvantages, nor determine the impact these various alternatives would have on overall site suitability and the ability of the plant to operate efficiently and reliably.

A. *Design*

Section III.C.1 Pg. III-33 (All Sites)
Section V.A.6, V.B.1 Pg V-136, 142 (Stanislaus Site)
Section VI.B.1 Pg VI-107 (Merced Site)
Section VII.B. Pg VII-106, 107 (Madera Site)

Substances present in water of high salinity from brackish water sources and concentrated by a circulating water system can be highly corrosive. An assessment of system materials necessary to provide assurance of an adequate and dependable conveyance system must be included to assure reliability of the proposed plant. The NOI did not adequately provide the data necessary to make this assessment.

Specific Data Inadequacies and/or Omissions

1. Location of the underground and overground portions of the conveyance system.
2. Composition of the materials from which the conveyance system can be reliably constructed to ensure adequate corrosion protection for the life of the project.
3. Design philosophy to assure reliability of the conveyance system including redundancy considerations and emergency plans.
4. Feasibility of the proposed disposal of blowdown into Kesterson Reservoir.

B. *Conveyance Corridors — Land Use*

Section III.B.1, Pg III-11 (All Sites)
Section III.C.2, Pg III-33 (All Sites)
Section V.A.6, Pg V-135 (Stanislaus Site)
Section V.B.1, Pg V-136 (Stanislaus Site)
Section VI.A, Pg VI-1 (Merced Site)
Section VI.B.1, Pg V-107 (Merced Site)
Section VII.B.1, Pg VII-106 (Madera Site)

The NOI contains no land use data on the proposed and alternate water conveyance (supply and blowdown) corridors for the three sites.

Specific Data Inadequacies and/or Omissions

Identification and analysis of land use issues which were considered in the selection of the water and blowdown conveyance corridors and routes.

C. *Conveyance Corridors — Biological Resources*

Section V.A.4.f Page V-85 (Stanislaus Site)
Section VI.A.4.f Page VI-57 (Merced Site)
Section VII.A.4.f Page VII-60 (Madera Site)

The NOI contains no land use data on the proposed and alternate water conveyance (supply and blowdown) corridors for the three sites.

Specific Data Inadequacies and/or Omissions

1. Biological resource data of similar scale and scope as that provided for the plant site, for the conveyance corridors, Kesterson site (including Kesterson National Wildlife Refuge) and areas immediately adjacent thereto, including but limited to:
   a. A discussion of rare, threatened or endangered species and their habitat potentially present.

b. A list of commercially or recreationally valued biological resources potentially present.

c. A list of unique resources of special or critical concern.

2. A discussion of potential measures for mitigating impacts on these resources as well as the feasibility of such measures.

2.3.4 *Cooling and Plant Water Systems*

The NOI provided no information to allow the staff to assess the viability of the proposed cooling water systems for their impact on water resources, plant performance and long-term reliability of power supply. This assessment must also consider proposed heat dissipation facilities and other plant water systems, including the waste treatment and disposal technology employed.

A. *Heat Dissipation Facilities*

Section III.B.1 Page III-11 (All Sites)
Section III.B.4 Page III-28

The selection of the heat dissipation system is an integral part of determining an acceptable and reliable supply of cooling water for the project. The NOI does not present an adequate discussion of alternative cooling options available, their economic feasibility or supporting evidence on their reliability.

Specific Data Inadequacies and/or Omissions

1. A complete breakdown and discussion of alternative cooling options for the proposed facility including relative economic, technological and environmental advantages and disadvantages of each. Specifically include natural draft and fan-assisted natural draft cooling towers.

2. A detailed discussion of alternative wet/dry cooling schemes, specifically including deluge systems.
3. Specific economic factors and cooling system design parameters the Applicant will use for evaluating wet/dry cooling.
4. Preliminary indication of the cost of both wet and wet/dry cooling systems.
5. Justification of the statement that the reliability of dry cooling is "not proven".

B. *Plant Water Systems*

Section III.B.4 Page III-24 (All Sites)
Section V.A.6.c Page V-135 (Stanislaus Site)
Section VI.A.6.c Page VI-106 (Merced Site)

The NOI did not provide descriptions, requirements, sizes and potential impacts that the various plant water systems, uses and facilities may have on the plant economics, feasibility, reliability and operability.

Specific Data Inadequacies and/or Omissions

1. Narrative description of the various plant water systems (e.g., component cooling systems, demineralized water systems, ECCS, etc.) with a discussion of their water quality requirements.
2. Discussion of the water quality requirements of the spray ponds and the method of monitoring and maintenance.
3. A water balance diagram for the plant showing all major water uses, flows and water quality.
4. A discussion of the extent of reduction feasible in the size of the evaporation ponds through the use of evaporators including a discussion of alternate waste disposal possibilities and justification and supporting evidence of the statement that evaporators "present operational and maintenance difficulties."

5. A discussion regarding source and quality of the standby cooling water supply at the Merced and Madera sites, including the location of the storage reservoirs for each site, to determine if there would be any problems associated with the percolation of the stored water into ground water basin.
6. A discussion of the reliability of operating the circulating water system at high levels of dissolved solids including the compatibility of materials in the system and risks associated with condenser tube leakage.

2.4 *TRANSMISSION*

2.4.1 *Transmission Line Planning and Hardware*

Pages VII-1, 2 and 3

The NOI contained no justification for, or supporting analysis on the Applicant's transmission needs, such as load flows, line losses, reliability and cost, which describe major reasons for selecting the alternative substations for points of delivery of power from the proposed power plant.

Specific Data Inadequacies and/or Omissions

1. Load flow diagrams for each alternative delivery plan from each site including a dynamic performance analysis showing load flows on existing PG&E 500 kv systems.
2. Cost comparisons of all alternative delivery plans for each site and comparisons of preferred delivery plan costs between sites.
3. An explanation which shows that each delivery plan alternative meets Western Systems Coordinating Council reliability criteria for system capacity and dynamic performance of the interconnected bulk power system.
4. Any additional reasons for substation selection.

5. Description of the legal interest in the Parker Substation.

2.4.2 *Transmission Corridor Land Use*

Pages VIII-13, 14, 30, 31, 35, 36, 43-49

Inadequate information was presented on existing and planned future land uses in and around the alternative transmission corridors and the consideration that these land uses were given in selecting alternative corridors.

Specific Data Inadequacies and/or Omissions

1. Maps of existing land use in the corridor areas.
2. Maps of city general plans in the corridor areas where corridors pass through or adjacent to city limits or cities' LAFCO spheres of influence.
3. A county general plan map of the study area depicting the alternative transmission corridors.

2.4.3 *Biological Resources (Transmission)*

Section VIII.E

Inadequate biological resource data was presented to allow the staff to identify and evaluate potential environmental constraints in analyzing the suitability of the alternative corridors to accommodate the proposed transmission facilities.

Specific Data Inadequacies and/or Omissions

Biological resource data of similar scale and scope as that provided for the plant site for the transmission corridors and areas immediately adjacent thereto, including as a minimum:

1. A discussion of rare, threatened or endangered species and their habitat potentially present.
2. Commercially or recreationally valued biological resources.

3. Unique resources of special or critical concern.
4. A discussion of potential measures for mitigating impacts on these resources as well as the feasibility of such measures.

2.5 *SOCIAL/ECONOMICS — FISCAL IMPACT*

Section III.F.3 (All Sites)
Section V.A.5.e (Stanislaus Site)
Section VI.A.5.e (Merced Site)
Section VII.A.5.e (Madera Site)

The NOI does not contain adequate information on the potential fiscal impact of the project on surrounding major taxing jurisdictions.

Specific Data Inadequacies and/or Omissions

1. Identification of jurisdictions that would be impacted fiscally. These include major jurisdictions that would receive revenues and/or incur expenditures as a result of the project.
2. Fiscal profiles (revenue, including sales tax; expenditures; bonded indebtedness) of impacted jurisdictions.
3. Fiscal projections for impacted jurisdictions, with and without the project, beginning at start of construction and extending five years into operation.
4. A schedule of the annual amounts of property tax revenue from the project (including auxiliary facilities and transmission lines).
5. A discussion with illustrative examples of the effect that variations in the mix of project participants (i.e., public versus private) would have on estimates of tax revenues from the project.

3.0 COMMENTS ON NOTICE FROM OUTSIDE AGENCIES

3.1 PUBLIC UTILITIES COMMISSION

3.2 CALIFORNIA REGIONAL WATER QUALITY CONTROL BOARD

3.3 MERCED COUNTY BOARD OF SUPERVISORS

[Letterhead]

Public Utilities Commission, State of California.

ERCDC Docket
No. 77-NOI-3

September 21, 1977

Mr. Keith Schwartztrauber, Project Manager
Energy Resources Conservation and
Development Commission
1111 Howe Avenue
Sacramento, California 95825

Dear Mr. Schwartztrauber:

In response to the letter of September 2, 1977 from Mr. Forrest requesting data adequacy review of PG&E's NOI for the proposed Stanislaus Nuclear Project, following are the major areas in which we feel the submittal is deficient.

1. Lack of information on participation by other parties. PG&E only states that it "has the financial capacity and the electric power needs to absorb the portion of the project that is not acquired by others". Advantages and disadvantages of joint venture financing should be addressed. (Ref. p. I-2)
2. What criteria will be used in determining which other utilities or entities should participate and to what extent in a joint venture.
3. Lack of justification of nuclear over alternative plant-types such as coal. In addition, variables in nuclear fuel cost escalation should be analyzed in comparing alternate plants. (Ref. p. III-42)
4. No substantiation of plant size, compared to other available sizes and the relation of size to reliability considerations. (Ref. p. II-4)

5. No firm committments [*sic*] on water appear to have been made, rather only indications of such availability. (Ref. p. III-3)
6. No discussion is offered comparing nuclear plant vendors in relation to advantages and disadvantages of each vendor's plants, as well as remedial action available or contemplated to improve reliability or other problems. Furthermore, no discussion is made relative to whether the proposed plant is a standard design, custom design, or variation, and why the specific design was chosen.
7. Insufficient detail is offered on the reliability improvement programs discussed briefly on pages IV-6 and 7.
8. If the capacity factor differences between nuclear and coal-fired plants is indeterminate at this time, what would be the effects on cost of service, loss of load probability, etc., if the difference proves significant?
9. The risks, uncertainties, and longer lead times of nuclear plant construction should be quantified in terms of probabilities and the effects on rates and capital financing requirements should be determined for all eventualities, including if the proposed plant is built and not allowed to operate.
10. The capital budget of PG&E through 1990 is needed in order to assess the ability of the company to finance this or other proposed projects without relief in the form of CWIP in rate base or higher allowable rate of return, or a variation of these methods.
11. Justification should be furnished for the 6% escalation rates used for nuclear and coal, especially in view of the recent history of nuclear fuel costs. In

addition, the effects of substantially different escalation rates should be assessed for both nuclear and coal-fired plants.

In summary, the NOI appears substantially deficient in many areas of major concern to the California Public Utilities Commission.

Very truly yours,

/s/ Phillip E. Blecher

PHILLIP E. BLECHER

Executive Director

[Letterhead]

14 September 1977

State of California
The Resources Agency
Energy Resource Conservation
and Development Commission
1111 Howe Avenue
Sacramento, California 95825

Attention: Mr. Keith Schwartztrauber

Subject: Pacific Gas and Electric Company — Notice of Intention for Stanislaus Nuclear Project, Alternate Sites; Merced, Madera

Gentlemen:

We have reviewed the subject two-volume report. Our analysis of the Notice of Intention (NOI) for the prime and alternate sites is based on approximately a 3-day review period. It is therefore cursory since the interval allowed for critique is, in our judgment, too short.

Following are our comments on water quality/quantity issues. Questions on the Stanislaus site should be directed to Mr. Gregory Vaughn at Sacramento. Mr. Loren Harlow, of our Fresno Office, has reviewed and commented on the Merced-Madera sites and should be contacted if questions arise.

Stanislaus Site

We believe the report could be improved by the discharger recognizing the following State Water Resources Control Board and Regional Board policies and guidelines and by stating his clear intention to implement them at the chosen project:

1. Waste Discharge Requirements for Nonsewerable Waste Disposal to Land-Disposal Site Design and

Operation Information. (Based on California Administrative Code, Title 23, Chapter 3, Subchapter 15.)

2. Water Quality Control Policy on the Use and Disposal of Inland Waters.
3. Guidelines for Waste Disposal from Land Developments.

No mention is made in the report of the alternate to discharge blowdown to the proposed master drain rather than to ponds on site or to Kesterson Reservoir.

There is no discussion, or an inadequate discussion occured [*sic*], of the ultimate disposal of accumulated salts from holding ponds or of prevention of groundwater degradation from pond leakage or percolation. The issue of pond disposal as a salt sink or Class I disposal site should be addressed in terms of the policy and guidelines referred to earlier.

The brief review raises the question of water supply for cooling. It is not clear to us from the NOI that if lower quality waters such as agricultural drainage or municipal effluent are to be the cooling supply, whether the technology for using them as an acceptable quality supply is currently available.

Finally, the report does not address the issue of timing if municipal wastewater is to be the cooling water supply. Municipalities have compliance dates to meet certain federal limits. These dates precede considerably the probable target date for completing the proposed nuclear plant. Therefore, to avoid locking in the municipalities to some other form of disposal and so precluding the alternative, that issue should be considered.

Alternative Sites: Merced-Madera

Wastewater to be produced from the proposed power plant will be generated by the heat dissipation system in the form of "blowdown" water of very highly mineralized content. There are various heat dissipation systems presently under analysis. However, ultimate disposal of the water for all the alternative systems will be accomplished by use of solar evaporation ponds. The areal requirement of the ponds varies according to the particular heat dissipation system under consideration with the maximum estimate being 4,000 acres of ponding.

There are no details in the NOI on precautionary measures to be taken preventing contamination of groundwater in the area from leakage from the ponds. It has been our experience with other discharges of highly saline wastes that a clay liner is not an acceptable material. With very high concentrations of salt, the colliodal [*sic*] clay particles flocculate together and allow seepage through the liner. The question of ultimate disposal of the salts remaining in the ponds after the useful economic life of the power plant has expired is left unanswered. The permanent internment of these salts at the ponding site would in essence constitute a formalized salt sink or a Class I disposal area. As such, some discussion should be given to removal and ultimate disposal of these salts upon termination of the project.

There is no mention in the NOI for waste disposal of cooling tower blowdown into a pipeline parallel to the makeup cooling water canal from Kesterson Reservoir back to Kesterson for ultimate discharge to the proposed master drain. This alternative would preclude the large areal requirements for evaporation ponding and accumulated salt problems associated with the ponds.

The report states that during the construct-on [*sic*] phase of the proposed power plant, some 2,200 workers will be employed at any one time. There were no details in the NOI, however, on how treatment and disposal of domestic wastewater generated by this number of personnel is to be effected.

It is the State Water Resources Control Board (SWRCB) policy to limit the source of inland power plant cooling water to water with high total dissolved solids (TDS) content. Agricultural wastewater or poor quality groundwater is specifically mentioned in SWRCB Resolution No. 75-58 as being the recommended cooling water sources. The NOI proposes to use such quality water for the plant's heat dissipation system. However, it is not clear from the report whether existing technology allows compatibility of highly mineralized makeup water in conventional cooling towers.

The report acknowledges the possibility of inadequate quantities of agricultural wastewater to be used as the cooling makeup supply during the initial operational stages of the plant. A study has been started by PG&E to evaluate the availability of poor quality groundwater from within or near the Westlands Water District. Adequate supply of cooling makeup water must be definitively determined before planning on this project progresses any further. If supplies of agricultural wastewater and poor quality groundwater are insufficient to meet power plant demands it is doubtful whether the project can be considered feasible.

Sincerely,
/s/ W. S. Johnson
WILLIAM S. JOHNSON
Senior Engineer
Delta Watershed

WSJ:LJH:GKV:ca
cc: SWRCB, Legal
CRWQCB, CVR, Fresno

[Letterhead]

September 15, 1977

Commission Secretariat
Energy Resources Conservation
& Development Commission
11 Howe Avenue
Sacramento, CA 95825

Re: Docket No. 77-NOI3

The Merced County Board of Supervisors has reviewed the "NOTICE OF INTENT" filed by Pacific Gas and Electric Company with the State Energy Resources Conservation and Development Commission on August 30, 1977, for construction of a two unit power plant at one of three alternate sites.

The following comments are submitted relative to the Merced alternate site, and are intended for the public record, to be considered prior to the Commission's determination, on or before September 28, 1977, if adequate technical information has been provided by the applicant.

Specifically, the Board wishes to register its concern regarding two significant items in the engineering study:

1. WATER SOURCE (VI-107 and 108)

   The makeup water source for the Merced site is expected to be agricultural waste water as provided by the Kesterson reservoir from the San Luis unit of the Central Valley Project.

   However, the applicant does acknowledge the waste water supplies, may not, in all probability, be adequately developed during the early years of plant operation; the applicant has therefore initiated a study in pursuit of a supplemental water source for the Merced site, most likely poorer quality ground water

"from within or adjacent to Westland Water District."

While the engineering study does mention that this review would be completed in September, 1977, it is felt, due to the important nature of water supplies in the local area, that this information should be available to be fully considered by the Commission within the context of the two volumes heretofor [*sic*] submitted with the Notice of Intention.

2. DISPOSAL OF RESIDUAL, NON-RADIOACTIVE WASTE (VI-107)

Three methods are under consideration for the treatment and disposal of high salinity water (blowdown) used in the plant cooling system: evaporation ponds, evaporation by mechanical means, and a combination of both ponds and evaporators.

The study indicates that 4,000 acres would be required if evaporation ponds alone were used. Mechanical evaporators, as stated, would reduce the volume of blowdown, but increase the salinity, and would not entirely eliminate the need for solar ponds. (III-31)

Inasmuch as a large acreage would in all probability be dedicated to the solar evaporation process, it is felt that technical information should be provided regarding:

a. The disposal methods to be employed in removal of accumulated solids, i.e. salts and residual chemicals from agricultural waste water.

b. More detailed information should be provided regarding the environmental impact the accumulation of solids would have on the subject area, the specific methods to be employed for removal,

and sites being considered for disposal should be identified.

I trust the foregoing concerns will be duly considered in the Commission's deliberations concerning the adequacy of technical information submitted by the applicant.

Thank you for your assistance in this matter.

Sincerely,
/s/ Frederick J. Wack,
Frederick J. Wack, Chairman
Merced County Board of Supervisors

4.0 PUBLIC COMMENTS

September 15, 1977

Loyd Forrest, Executive Director
Energy Resources Conservation and
Development Commission
1111 Howe Avenue
Sacramento, California

Re: Pacific Gas and Electric Stanislaus Notice of Intent

Dear Loyd,

We have reviewed the Pacific Gas and Electric Notice of Intent to construct a nuclear powerplant at a site near Modesto, Merced, or Madera (the "Stanislaus NOI") to the limited extent possible given the restricted distribution of that document. The purpose of this letter is to convey our comments on the adequacy of the information presented on the subjects of generation alternatives and non-generation alternatives. Our failure to comment at this time on other major issues should not be construed as an endorsement of the adequacy of the NOI in other regards. Specifically, we may wish to comment further on the adequacy of the NOI's treatment of health and safety issues and on the completeness or incompleteness of the data provided regarding the generating technology, but we are unprepared to do so at this time.

The Notice of Intent process is, in our view, not a licensing process but an opportunity to examine and investigate alternatives — alternate sites, fuels, facility designs, technologies, and, most important, alternative investments of capital. Section 25509(d) of the Warren-Alquist Act is explicit in this regard: one of the purposes of the NOI hearings is "to solicit information regarding reasonable alternative sources of electrical generating capacity or energy to be provided . . . or combinations thereof, which will better

carry out the policies and objectives of this division." Among the "policies and objectives" referred to is the need to "reduce wasteful, uneconomical, and unnecessary uses of energy, thereby reducing the rate of energy consumption, [and] prudently conserve energy resources . . ." (Section 25007). The time for a comprehensive investigation and full public discussion of alternatives is the NOI hearing process; the document which in an important sense establishes the foundation and the bounds for subsequent investigation and discussion is the Notice of Intent. It is critical to the quality of the hearing process that the NOI contain an adequate initial discussion of all potential reasonable alternatives to the facility proposed, and particularly of the various "no project" alternatives.

The Stanislaus NOI does not, in our view, provide sufficient information on generation and non-generation alternatives to allow for an assessment of reasonable alternatives by the Commission or by any interested party. This is a serious deficiency which goes to the heart of what was intended by the statute and in the regulations. The Commission should not accept the Stanislaus NOI before these deficiencies have been remedied.

In particular, the staff should request P.G.&E. to furnish information on the scope and impact of present conservation programs, the scope, cost and potential impact of additional conservation measures, load management possibilities, and the comparative system availability and need for base, intermediate, and peaking capacity under various conservation and load management scenarios. In addition, staff should request information on alternative sources of capacity, including but not limited to wind, solar, pumped storage, cogeneration, fuel cells, generation from coal, oil, or municipal or agricultural wastes or methanol, and any com-

bination of the above sources potentially available to meet P.G.&E.'s need for new capacity.

Sincerely,

/s/ Michael R. Eaton

Michael R. Eaton

Energy Coordinator

Submitted to the Energy Commission
by Samuel R. Tyson on 4-6-77

Energy Commission Received: Sep 1 1977

PROPOSED WATERFORD (EAST STANISLAUS)
NUCLEAR PROJECT
NOTICE OF DIS-INTENT

Stanislaus Safe Energy Committee has been working in our area to educate people about the nuclear issue and the need to reorder our energy priorities. The generation of electricity by nuclear fission, once hailed as the bright hope of mankind, now divides the country. Its economy is unproven and its safety is widely debated.

WHEREAS the United States with one-sixteenth (1/16) of the world's population consumes over one-third (1/3) of its natural resources; and whereas many of our "needs" would be considered luxuries by two-thirds (2/3) of the world's people; and

WHEREAS radiation from the nuclear fuel cycle and the routine release of radiation from power plants have the potential to cause genetic damage, cancer, and other grave health problems; and whereas the full extent of these hazards cannot be known for decades; and

WHEREAS twenty (20) years of research by federal agencies have not found a safe, dependable, and lasting means of storing highly hazardous radioactive waste; and

WHEREAS after years with no commercial fuel reprocessing plants operating, it is becoming more doubtful that commercial reprocessing can be accomplished compatible with a safe environment; and

WHEREAS because the potential for sabotage will increase with the fast breeder economy and with the centralization of power from nuclear plants, civil liberties could be increasingly limited; and

WHEREAS the spent fuel by-products from a plant similar to the ones proposed for Waterford (East Stanislaus) were used by India for their first atomic explosion; and whereas corporations and nations are selling nuclear reactors and reprocessing technology to foreign countries, thus proliferating the capability for developing nuclear weaponry around the world; and

WHEREAS current problems with nuclear energy such as new and expensive designs that lead to costly plant construction delays, swelling fuel enrichment costs, a shortage of yellowcake, and lower capacity output are escalating its expense far beyond any earlier predictions or assurances; and whereas some costs, like those for reprocessing and waste disposal, wastewater treatment, and decommissioning, are still not known and will add significantly to the bill for nuclear power; and whereas the enormous capital investment required for nuclear plants could break the capital market; and

WHEREAS in Stanislaus County where the pros and cons of nuclear energy have been actively debated in the public forum for over two years, the more informed public voted nearly forty-one percent (41%) for nuclear safeguards compared with the statewide average of thirty-three percent (33%); and

WHEREAS it is an act of colonialism to make the immediate population face the major risks of nuclear accident, radioactive pollution, and related disease while receiving a small part of the power; and whereas the economic gains from the proposed plant will primarily benefit people outside the high risk area; and

WHEREAS the land proposed for the nuclear plant site is part of the best natural grazing lands in California, and no certain methodology exists for decontaimination [*sic*] of

agricultural lands or water should accidental radioactive releases occur; and

WHEREAS because tremendous amounts of fresh or agriculturally usable water would be used for cooling in the massive evaporation towers, local weather changes may result from continual heat and vapor discharges, and salts harmful to plant life will be released for miles around; and

WHEREAS the Modesto and Turlock Irrigation Districts (MID and TID) continue to encourage energy consumption with inverted rates; and whereas they have refused to implement the lifeline concept, an important energy conservation measure recognized by the California Public Utilities Commission; and whereas MID has adversely affected low income people by an across the board twenty-five percent (25%) electric rate increase in September, 1976; and*

WHEREAS alternative sources of energy — solar, geothermal, wind, and methane — are available with present technology but are not being researched or developed to their full potential when they are budgeted for a meager

---

*What we believe lifeline rates should be based upon:

Basic power for lighting, cooking, some appliances, heating water, and space heating;

Cost of basic power should not be forced to carry the burden of amenities (example: air conditioning) in energy production systems;

Place a limit of twenty-five percent (25%) of any proposed rate change on the designated lifeline base.

February 22, 1977 Update: The MID in January 1977 took its first step in the direction of lifeline rates. It decided on a twelve percent (12%) increase on all power over the initial 300 kilowatts for residences. The TID also has begun to rate power along lifeline concepts. But both MID and TID have still to adopt a full scale lifeline system applicable not only to residences but also to commerce and industry. And neither utility has made a significant move to change its inverted rate structure.

March 16, 1977 Update: On March 15, 1977, MID raised the average customer's rate eighteen percent (18%). There was no increase for users of less than 300 kilowatts. MID has still done nothing beyond the basic lifeline rate to change the inverted structure.

four percent (4%) of the 1976 Energy Research and Development Administration's allocations as compared with over forty-five percent (45%) for nuclear energy; and

WHEREAS a Federal Energy Administration preliminary study has shown that more steady long-term jobs are created by solar and other energy alternatives than by fission power; and whereas nuclear energy creates little more than temporary construction work supporting a false growth economy; and

WHEREAS several major studies like those of the Ford Foundation and Worldwatch Institute conclude that conservation, practiced boldly throughout the country, could save up to fifty percent (50%) of our energy; and whereas these savings could give us the time necessary to develop energy sources; and whereas to this date little has been done to effect serious conservation; and

WHEREAS no special consideration has been given to recycling as a method for energy, water, and natural resource conservation; and

WHEREAS no credible national energy program exists, be it resolved that there is no energy shortage but massive misuse.

Authority arises from the citizenry and morality is the prerogative of conscience. Accordingly, we publicly file this notice of dis-intent to proclaim our expanding efforts to impede and block with the utmost of our energy and resources the proposed construction of the Waterford (East Stanislaus) nuclear power plant. We encourage others to join this vital community action.

/s/ Daniel F. Pollock
Daniel F. Pollock
Stanislaus Safe Energy Committee

/s/ Samuel R. Tyson
Samuel R. Tyson
Modesto Peace/Life Center

December 1, 1976

[Letterhead]

Energy Commission Received: Sep 27 1977

Flying M Ranches

September 22, 1977

Mr. James A. Walker
Deputy Executive Director
Energy Resources Conservation
and Development Commission
1111 Howe Avenue
Sacramento, CA 95825

Dear Mr. Walker:

I met with representatives of Pacific Gas and Electric Co. and ERCDC on some of my property in Merced on September 20th. Certainly the inspection was conducted in a very satisfactory fashion.

I should like to go on record as a California taxpayer and as a Californian who, in my ranching and farming operations, uses far more electrical energy than the average Califorian protesting the construction of a nuclear plant so far from any adequate source of cooling fluids. The tremendous cost of supplying cooling water to the proposed Merced site and the problem and cost of disposing of the resulting, highly saline water will obviously result in excess charges to be passed on to the consumer.

Sincerely,

/s/ John W. Myers
JOHN W. MYERS

JWM:cm

[Letterhead]

Energy Commission Received: Sep 20 1977

National Consumer Law Center Inc.

September 15, 1977

Power Plant Siting Division
California Energy Commission
1111 Howe Street
Sacramento, CA 94825

Gentlemen:

We understand that PG&E has filed notice of intention for the construction of the Stanislaus Nuclear Power Plant.

We may be interested in intervening in this case at some point in the future. Therefore, we would like to request the following:

1. Please forward any documents as they become available, and
2. A copy of the rules of procedure for siting decisions before the Commission.

Thank you for your assistance.

Sincerely yours
/s/ Steven E. Ferrey
Steven E. Ferrey
Staff Attorney
Energy Project

SEF/dbh

[Letterhead]

Energy Commission Received: Sep 15 1977
Jeanne Lippay

September 14, 1977

Mr. Keith Schwartztrauber
Project Manager
Energy Resources Conservation and
Development Commission
1111 Howe Avenue
Sacramento, CA. 95825

Re: Stanislaus Nuclear Project
77-NOI-3

Dear Mr. Schwartztrauber:

I am curious to know how siting for the proposed Stanislaus nuclear power plant can proceed under the regulations presently in effect; specifically, the requirement that technology for reprocessing and disposal of nuclear wastes be adequately developed by the federal government *before* additional plants are built in California.

Can exemptions from the safety requirements enacted by the California Legislature for protection of the public be granted at will and, if so, upon what authority?

And I have a further question: When does the Commission feel it will have reached the limits of its prodigality in appropriating California land and water for purposes inimical to public health and safety?

Sincerely yours,

/s/ Jeanne Lippay

cc: Richard L. Maullin, Chairman, ERCDC
John Shaffer, Jr., Esquire

Energy Commission Received: Oct 4 1977

September 29, 1977

Dear Mr. Maullin,

We are writting this letter in order to voice our opposition to the proposed construction of a nuclear power plant to the northeast of Merced.

As lifelong residents of Merced and property owners in the Bear Valley/Hornitos area, we had eventually planned to build a home on our foothill property and make it our permanent residence. If the proposed plant is located near Merced, we will leave the area.

Too many questions have been left unanswered. The obvious problem of required water supply for such a plant can be seen clearly during this drougth [*sic*] year. We have not heard any mention of that [*sic*] environmental, phenomena, the inversion layer, that blankets the San Joaquin Valley and would hold nuclear debris in the lower atmosghere [*sic*] if any leakage or mishap occurred. Considering the San Joaquin is one of the richest and most vital farming areas in the nation; coupled with the large population of the valley, the consequences could be disasterous [*sic*] to a degree that has never been mentioned by the Pacific Gas and Electric Company or any public agency.

It seems strange that such a dangerous, expensive and questionable source of energy is being promoted, while the improvement of relatively safe sources, such as hydroelectric and solar, is seemingly ignored.

Located as we are at the base of the Sierras, the opportunity to develop hydroelectric power from the natural occurance [*sic*] of run-off seems a clear alternative. Granted, opposition to the development of hydro-electric plants has come from conservation groups opposing dam construction. With the failure of industry and the individual to conserve

and the tremendous increase in local population, it seems inevitable that concerned environmentalists must take a "lesser of two evils" look at the long term environmental dangers of nuclear power as opposed to hydroelectric.

In the same vein, our California weather, with it's [*sic*] abundance of sunshine, offers a perfect opportunity to develop that virtually limitless energy source: the sun. So far, P.G.&E. has done little to present the possibility of solar energy potential to the public. Could it be that the profit angle of solar energy is not quite as appealing as that of the nuclear power plant?

It is time that the public let their feelings be heard. The decisions that are made now will not only influence the remainder of our lifetimes, but also those of our children and all life hereafter. The plutonium wastes in "spent" fuel will remain dangerous for as long as 250,000 years. As Marvin Rennikoff; Chairman of the Nuclear Energy Policy Commission, stated in a letter to President Carter, "By any objective standards, nuclear waste practices have been a failure . . . We believe that further licensing of nuclear reactors should be halted until an acceptable resolution to this problem be found."

The question of nuclear power plant construction and location is one of such serious nature that it merits careful and deliberate examination. It is vital that all opinions be heard now, in the planning stage, while there is still an opportunity to determine our own futures and the quality of our lives.

In all sincerity,
Mary Anne and John Bland

Joint Appendix

Office - Supreme Court, U.S.
FILED
SEP 4 1982
ALEXANDER L. STEVAS,
CLERK

No. 81-1945

IN THE

Supreme Court of the United States

October Term, 1982

PACIFIC GAS AND ELECTRIC COMPANY and SOUTHERN CALIFORNIA EDISON COMPANY,

Petitioners,

vs.

STATE ENERGY RESOURCES CONSERVATION AND DEVELOPMENT COMMISSION, *et al.*,

Respondents.

On Writ of Certiorari to the United States Court of Appeals for the Ninth Circuit.

JOINT APPENDIX.

JOHN R. MCDONOUGH,
HOWARD B. SOLOWAY,
Counsel of Record,
BALL, HUNT, HART, BROWN AND BAERWITZ,
450 North Roxbury Drive,
Beverly Hills, Calif. 90210,
(213) 278-1960,
Attorneys for Petitioners.

(Names and Addresses of Attorneys Of Counsel are listed on Inside of Cover.)

PETITION FOR CERTIORARI FILED APRIL 20, 1982
CERTIORARI GRANTED JUNE 21, 1982

Parker & Son, Inc., Law Printers, Los Angeles. Phone 724-6622

JOINT APPENDIX

Page

1. Docket Entries in Consolidated Case Nos. 80-4265, 80-4273, 79-3365, 79-3382, United States Court of Appeals for the Ninth Circuit . App. p. 1
2. Docket Entries in Case No. CV S-78-527-R, United States District Court for the Eastern District of California 28
3. Status of Nuclear Fuel Reprocessing, Spent Fuel Storage and High-Level Waste Disposal, Draft Report, Nuclear Fuel Cycle Committee, California Energy Commission, Dated January 11, 1978 (Filed September 11, 1979 in the District Court in Support of Plaintiffs' Motion for Summary Judgment) 36
4. Decision of the State of California Energy Resources Conservation and Development Commission, in the Matter of: Implementation of Nuclear Reprocessing and Waste Disposal Statutes, Docket Nos. 76-NL-1, 76-NL-3, Dated January 25, 1978 (Filed September 11, 1979 in the District Court in Support of Plaintiffs' Motion for Summary Judgment) 410
5. Affidavit of Terry R. Lash, Dated October 18, 1979 (Filed October 29, 1979 in the District Court in Opposition to Plaintiffs' Motion for Summary Judgment) 415

Page

6. Declaration of Charles Warren (and Supporting Exhibits), Dated October 22, 1979 (Filed October 29, 1979 in the District Court in Opposition to Plaintiffs' Motion for Summary Judgment) 430
7. Declaration of Emilio E. Varanini, III, Dated October 25, 1979 (Filed October 29, 1979 in the District Court in Opposition to Plaintiffs' Motion for Summary Judgment) 455
8. Affidavit of Dale G. Bridenbaugh, Dated October 26, 1979 (Filed October 29, 1979 in the District Court in Opposition to Plaintiffs' Motion for Summary Judgment) 463
9. Order of the Supreme Court of the United States Granting Petition for Writ of Certiorari, Entered June 21, 1982 484
10. Contents of Appendix to Petition for Writ of Certiorari (Filed in the Supreme Court of the United States on April 20, 1982). This Appendix Has Not Been Reprinted but Is Incorporated by Reference and Itemized Herein 485

1. Docket Entries in Consolidated Case Nos. 80-4265, 80-4273, 79-3365, 79-3382, United States Court of Appeals for the Ninth Circuit.

DOCKET ENTRY NO. 80-4265

United States Court of Appeal for the Ninth Circuit.

Pacific Gas and Electric Company and Southern California Edison Company, Plaintiffs-Appellees, vs. State Energy Resources Conservation and Development Commission, Russell Schweickart, Emilio E. Varanini, III, et al., Defendants, and Natural Resources Defense Counsel, Inc, Sierra Club, Environmental Defense Fund and Californians for Nuclear Safeguards, Intervening Defendants-Appellants. Consolidated 80-4273, 79-3365, 79-3382.

[Names and Addresses of Counsel for Parties Omitted in this Printing].

D.C. No. Cv78-527 MLR. D.C. Judge Hon. M.L. Real. Notice of appeal filed May 23, 1980.

FILED IN DC: October 2, 1978.

Nature (950): CIVIL. (Sacramento) DC, Eastern California.

DATE	FILINGS-PROCEEDINGS
1980	
May 29	DOCKETED CAUSE & ENTERED APPEARANCES OF COUNSEL. jr
Jun 25	Fld in 79-3365, as of Jun 20, 1980, State Energy Resources Conservation and Develop. Comm., et al, mtn for consolidation of appeals 79-3365, 79-3382, 80-4265 and 80-4273. (oppsed by Pac. Legal Foundation) (to panel) 6/20/80.-kf-
July 2	Filed in 79-3365, order (JRB) the motion to consolidate appeals nos. 79-3365, 79-3382, 80-4265 & 80-4273 is granted. Briefs in Nos. 80-4265 & 80-4273 will be due according to the following schedule. Aplts' briefs will be due by Aug. 1. Aples' briefs will be due within 21 days after filing of aplts' briefs. Aplts may file replies within 10 days thereafter. No exts will be granted. The consolidated appeals will be heard in Oct., 1980. -rmc-

DATE	FILINGS-PROCEEDINGS
Jul 17	Filed in 80-4273, as of July 16, P.U.C. of the State of Calif.'s motion for leave to intervene as defendant. (CIV-ATT) 7/16 -db-
July 23	Filed in 79-3365, aple's (PACIFIC LEGAL FOUNDATION) opposition to P.U.C.'s motion for leave to intervene as defendant. (CIVATT) 7/23 -db-
July 25	Filed aples' (PG&E) opposition to PUC's motion for leave to intervene. (CIVATT) 7/24 -db-
Jul 31	Filed orig & 15 amicus (State of Maine) briefs. (7/29) ogm
Aug 1	Filed orig & 15 amicus (STATE OF IDAHO) briefs. (7/31) ogm
Aug 1	Filed CERTIFICATE OF RECORD (7/30). ss
Aug 4	R'cvd as of 8/1, orig only of amicus (State of North Carolina) brief (7/29); counsel contacted to send more briefs. ogm
Aug 4	Filed as of 8/1, orig & 15 amicus (STATE OF ARKANSAS) briefs. (7/31) ogm
Aug 4	Filed as of 8/1, adoption by State of Wisconsin, etc., of their briefs previously filed in 79-3365 (7/30). ogm
Aug 4	Filed as of 8/1, orig & 15 amicus (State of Hawaii) briefs. (7/21) ogm
	SEE PROCEEDINGS IN 79-3365
Oct 14	Filed as of 8/1 CERT RECORD ON APPEAL IN TEN VOLS, PLDGS VOL I-VIII copy R/T VOL IX-X orig ONE ENVELOPE OF EXHIBITS pv
Oct 9	ARGUED & SUBMITTED TO; FLETCHER, FERGUSON, CJJ, FITZGERALD, DJ. ss
1981	
Feb 17	FILED SUPLE RECORD ON APPEAL IN ONE BOX OF EXHIBITS pv
July 15	Filed Public Service Commission of Nevada substitution of attys. Substituting Zev E. Kaplan in place of Richard H. Bryan, Atty Gen of Nevada as counsel of record. 7/14 -rmc-
Aug 13	Filed aplt's association of atty's of record. Associating the firm of BEERS & DICKSON. (8/6). ag

DATE	FILINGS-PROCEEDINGS
Aug. 13	Filed aplt's withdrawal of counsel. Withdrawal of Antonio Rossman, the law offices of Michael R. Jencks, Michael R. Jencks and Kathryn Burkett Dickson as counsel of record. 8/12. ag
Oct 7	ORDERED OPINION (FLETCHER) FERGUSON CONCURRING FILED & JUDG TO BE FILED & ENTD.
Oct 7	FILED OPINION — REVERSED.
Oct 7	FILED & ENTERED JUDGMENT. -rmc-
Oct 20	Filed Intervenor-aplt's (NATURAL RESOURCES DEFENSE COUNCIL) Bill of Costs. 10/20. ag in 79-3365 (PG&E, et al.)
Oct 21	Filed/aples' petition for rehearing & suggestion of appropriateness of rehearing en banc. (Panel & all active judges) 10/20. ag
Oct 21	Filed aplt's Bill of Costs. (10/21) ag
Oct 21	Filed in 79-3365 aples (Pacific Legal Fndtn, et al.) petition for rehearing & suggestion for rehearing en banc. (Panel & all active judges) 10/21. ag
Nov 4	Filed in 79-3365 aplt's exhibit to affidavit of William M. Chamberlain supporting aplt's Bill of Costs. (11/3) ag
Nov 13	Filed in 79-3365, as of Nov. 10, aples' (PACIFIC LEGAL FOUNDATION) motion for leave to file late objections to bill of costs. (Civatt) 11/10 -rmc-
Nov 13	Recvd in 79-3365, as of Nov. 10, aples' (PACIFIC LEGAL FOUNDATION) objections to bill of costs. (Civatt) 11/10 -rmc-
Nov 20	Filed in 79-3365 motion of EDISON ELECTRIC INSTITUTE for leave to file memorandum of amicus curiae on behalf of aples PG&E and SOUTHERN CALIF. EDISON. (Panel) 11/19. ag
Nov 20	Recvd orig & 23 amicus curiae (EDISON ELECTRIC INSTITUTE) memorandum. (Panel) 11/19. ag (in 79-3365)
Nov 20	Filed in 79-3365 aplts' opposition to motion for leave to file late objections to Bill of Costs and response to objection to Bill of Costs. (Civatt) 11/19. ag
Nov 30	Filed as of Nov. 25 in 79-3365 aples' response to opposition to motion to file objections to Bill of Costs. (Civatt) 11/25. ag

DATE	FILINGS-PROCEEDINGS
Jan 20	Filed in 79-3365, order (FLETCHER, FERGUSON & FITZGERALD) the petition for rehearing is DENIED and the suggestion for a rehearing en banc is REJECTED. -rmc-
Jan 29	MANDATE ISSUED
Feb 11	Filed in 79-3365, order (STAFF ATTY) upon due consideration of the State Energy Resources Conservation and Development Commission's bill of costs, Pacific Legal Foundation's objections and the response to the objections, it is determined that the Commission is entitled to costs in the amount of eight thousand dollars ($8,000). That amount is awarded and taxed against the Pacific Legal Foundation. This order is subject to reconsideration by a judge if any opposition is filed within ten (10) days of the entry of the order. -rmc-
Feb 11	Filed in 79-3365, order (STAFF ATTY) upon due consideration of the State Energy Resources Conservation and Development Commission's motion to tax costs against the Pacific Gas and Electric Co. and the Southern California Edison Co., it is determined that the commission's allowable costs on appeal are five thousand six hundred and fifty-six dollars ($5,656). That amount is awarded. This order is subject to reconsideration by a judge if any opposition is filed within ten (10) days of the entry of the order. -rmc-
Feb 23	Filed in 79-3365 as of Feb. 22 pltf-aple's (PACIFIC LEGAL FOUNDATION) exception to order awarding and taxing costs. (Civatt) 2/19. ag
Feb 23	Responded to ltr from aple of 2/4 re: order of 1/20 covers both petitions for rehearing. pf
March 4	Filed in 79-3365 deft-aplt's (CALIFORNIA ENERGY COMMISSION) response to pltf-aple's exception to order awarding and taxing costs. (Civatt) 3/3. ag
April 23	RECVD SC notice of filing petition for cert on 4/20/82, SC#81-1945. pn
June 24	Filed certified copy of SC order of 6/21/82, granting cert, limiting to certain questions. (copies to panel) pn

DOCKET ENTRY NO. 80-4273.

United States Court of Appeal for the Ninth Circuit.

Pacific Gas and Electric Company and Southern California Edison Company, Plaintiffs-Appellees, vs. State Energy Resources Conservation and Development Commission, Russell Schweickart, Emilio E. Varanini, III, C. Suzanne Reed, James A. Walker and Ronald D. Doctor, Defendants-Appellants, and Natural Resources Defense Counsel, Inc., Sierra Club, Environmental Defense Fund and Californians for Nuclear Safeguards, Intervening-Defendants. Consolidated 80-4265, 79-3365, 79-3382.

[Names and Addresses of Counsel for Parties Omitted in this Printing].

D.C. No. Cv78-527 MLR. D.C. Judge Hon. M.L. Real. Notice of appeal filed May 23, 1980.

FILED IN DC: October 2, 1978.

Nature (950): CIVIL. (Sacramento) DC, EASTERN CALIFORNIA.

DATE	FILINGS-PROCEEDINGS
1980	
May 30	DOCKETED CAUSE & ENTERED APPEARANCES OF COUNSEL. ir
Jun 25	Fld in 79-3365, as of Jun 20, 1980, State Energy Resources Conservation and Develop. Comm., et al., mtn for consolidation of appeals 79-3365, 79-3382, 80-4265 and 80-4273. (opposed by Pac. Legal Foundation) (to panel) 6/20/80. -kf-
July 2	Filed in 79-3365, order (JRB) the motion to consolidate appeals nos. 79-3365, 79-3382, 80-4265 & 80-4273 is granted. Briefs in Nos. 80-4265 & 80-4273 will be due according to the following schedule. Aplts' briefs will be due by Aug. 1. Aples' briefs will be due within 21 days after filing of aplts' briefs. Aplts may file replies within 10 days thereafter. No exts will be granted. The consolidated appeals will be heard in Oct., 1980. -rmc-

DATE	FILINGS-PROCEEDINGS
Jul 17	Filed, as of July 16, Public Untilities Commission of the State of California's motion for leave to intervene as a defendant. (CIVATT) 7/16 -db-
July 24	Filed in 79-3365, aple's (PACIFIC LEGAL FOUNDATION) opposition to P.U.C.'s motion for leave to intervene as defendant. (CIVATT) 7/23 -db
July 25	Filed in 80-4265, aples' (PG&E) opposition to P.U.C's motion for leave to intervene. (CIVATT) 7/24 -db-
Jul 31	Filed in 80-4265, orig & 15 amicus (State of Maine) briefs (7/29). ogm
Aug 1	Filed in 80-4265, orig & 15 amicus (STATE OF IDAHO) briefs. (7/31) ogm
Aug 1	Filed in 80-4265, CERTIFICATE OF RECORD (7/30). ss
Aug 4	Filed in 80-4265, orig & 15 amicus (State of Arkansas) briefs (7/31). ogm
Aug 4	R'cvd as of 8/1 in 80-4265, orig only of amicus (STATE OF NORTH CAROLINA) briefs; (7/29); more copies needed; contacted counsel. ogm
Aug 4	Filed in 80-4265 as of 8/1, adoption of State of Wisconsin, etc., of their briefs previously filed in 79-3365 (7/30). ogm
Aug 4	Filed in 80-4265 as of 8/1, orig & 15 amicus (State of Hawaii) briefs. (7/21) ogm
	SEE PROCEEDINGS IN 79-3365
Oct 14	FILED ad of 8/1 CERT RECORD ON APPEAL IN TEN VOLS, PLDGS VOL I-VIII copy R/T VOL IX-X orig ONE ENVELOPE OF EXHIBITS pv
Oct 9	ARGUED & SUBMITTED TO: FLETCHER, FERGUSON, CJJ, FITZGERALD, DJ. ss
1981	
July 15	Filed in 80-4265, Public Service Commission of Nevada substitution of attys. Substituting Zev E. Kaplan in place of Richard H. Bryan, Atty Gen of Nevada as counsel of record. 7/14 -rmc-
Aug. 13	Filed in 80-4265 aplt's association of atty's of record. Associating the firm of BEERS & DICKSON. (8/6). ag

Aug 13 Filed in 80-4265 aplt's withdrawal of counsel. Withdrawal of Antonio Rossman, the law offices of Michael R. Jencks, Michael R. Jencks and Kathryn Burkett Dickson as counsel of record. 8/12. ag

Oct 7 ORDERED OPINION (FLETCHER) FERGUSON CONCURRING FILED & JUDG TO BE FILED & ENTD.

Oct 7 FILED OPINION — REVERSED.

Oct 7 FILED & ENTERED JUDGMENT. -rmc-

Oct 21 Filed in 80-4265 Intervenor-aplt's (NATURAL RESOURCES DEFENSE COUNCIL) Bill of Costs. (10/20) ag

(PG&E, et al.)

Oct 21 Filed in 79-3365 aples'/petition for rehearing & suggestion of appropriateness of rehearing en banc. (Panel & all active judges) 10/20. ag

Oct 21 Filed aplt's Bill of Costs. (10/21). ag

Oct 21 Filed in 79-3365 aples' (Pacific Legal Fndtn, et al.) petition for rehearing & suggestion for rehearing en banc. (Panel & all active judges) 10/21. ag

Nov 4 Filed in 79-3365 aplt's exhibit to affidavit of William M. Chamberlain supporting aplt's Bill of Costs. (11/3) ag

Nov 13 Filed in 79-3365, as of Nov. 10, aples' (PACIFIC LEGAL FOUNDATION) motion for leave to file late objections to bill of costs. (Civatt) 11/10 -rmc-

Nov 13 Recvd in 79-3365, as of Nov. 10, aples' (PACIFIC LEGAL FOUNDATION) objections to bill of costs. (Civatt) 11/10 -rmc-

Nov 20 Filed in 79-3365 motion of EDISON ELECTRIC INSTITUTE for leave to file memorandum of amicus curiae on behalf of aples PG&E and SOUTHERN CALIF. EDISON. (Panel) 11/19. ag

Nov 20 Recvd in 79-3365 orig & 23 amicus curiae (EDISON ELECTRIC INSTITUTE) memorandum. (Panel) 11/19. ag

Nov 20 Filed in 79-3365 aplts' opposition to motion for leave to file late objections to Bill of Costs and response to objection to Bill of Costs. (Civatt) 11/19. ag

Nov 30 Filed as of Nov. 25 in 79-3365 aples' response to opposition to motion to file objections to Bill of Costs. (Civatt) 11/25. ag

1982

Jan 20 Filed in 79-3365, order (FLETCHER, FERGUSON & FITZGERALD) the petition for rehearing is DENIED and the suggestion for a rehearing en banc is REJECTED.

Jan 29 MANDATE ISSUED

Feb 11 Filed in 79-3365, order (STAFF ATTY) upon due consideration of the State Energy Resources Conservation and Development Commission's bill of costs, Pacific Legal Foundation's objections and the response to the objections, it is determined that the Commission is entitled to costs in the amount of eight thousand dollars ($8,000). That amount is awarded and taxed against the Pacific Legal Foundation. This order is subject to reconsideration by a judge if any opposition is filed within ten (10) days of the entry of the order. -rmc-

Feb 11 Filed in 79-3365, order (STAFF ATTY) upon due consideration of the State Energy Resources Conservation and Development Commission's motion to tax costs against the Pacific Gas and Electric Co. and the Southern California Edison Co., it is determined that the commission's allowable costs on appeal are five thousand six hundred and fifty-six dollars ($5,656). That amount is awarded. This order is subject to reconsideration by a judge if any opposition is filed within ten (10) days of the entry of the order. -rmc-

Feb 23 Filed in 79-3365 as of Feb. 22 pltf-aplt's (PACIFIC LEGAL FOUNDATION) exception to order awarding and taxing costs. (Civatt) 2/19. ag

FEB 23 Responded to ltr from aple rec'd 2/4 re: order of 1/20 covers both petitions for rehearing. pf

March 4 Filed in 79-3365 deft-aplt's (CALIFORNIA ENERGY COMMISSION) response to pltf-aple's exception to order awarding and taxing costs. (Civatt) 3/3. ag

April 23 RECVD SC notice of filing petition for cert on 4/20/82, SC#81-1945. pn

June 24 Filed certified copy of SC ordr of 6/21/82, granting cert, limiting to certain questions. (copies to panel). pn

DOCKET ENTRY NO. 79-3365.

United States Court of Appeal for the Ninth Circuit.

Pacific Legal Foundation, a Calif. nonprofit corp., et al., Plaintiffs-Appellees, vs. State Energy Resources Conservation & Development Commission, a State agency: et al., Defendants-Appellants, and Natural Resources Defense Council, Inc., et al. Defendants/Intervenors. Companion To: 79-3416. Consolidated 79-3382, 80-4265/73. Cross-Appeal: 79-3424.

[Names and Addresses of Counsel for Parties Omitted in this Printing].

D.C. No. CV# 78-711. D.C. Judge William B. Enright. Notice of appeal filed JUNE 19, 1979.

FILED IN D.C. OCT. 2, 1978.

CIVIL: DC, SOUTHERN CALIF.

DATE	FILINGS-PROCEEDINGS
1979	
JUL 9	PAID DOCKET FEE. -vt-
JUL 9	Filed motion to intervene (State of Wisconsin & Public Service commission) affidavit & brief attached. (Schickele) -vt-
JUL 11	DOCKETED CAUSE & ENTERED APPEARANCE OF COUNSEL. -vt-
AUG 3	FILED as of 7/31, CERTIFICATE OF RECORD (7/30/79) ss
AUG 8	Pursuant to 28(h) pltf (Pacific Legal Foundation) opening brief due Sept. 17, 1979. ss
AUG 9	Received, as of August 6, Aplt's (STATE ENERGY RESOURCES . . .) motion for ext. of time to file brief. Premature, and returned to counsel. -db-
Aug 9	Filed Appellants' motion for summary reversal; brief in support. 8/8 (Schickele) ec
Aug 9	Filed Appellants' motion for leave to file appendix to motion for summary reversal. 8/8 (Schickele) ec

DATE	FILINGS-PROCEEDINGS
Aug 10	Recvd 4 Aplts' Appendices to Motion for Summary Reversal. 8/9 (Schickele) ec
Aug 14	Filed, as of Aug 3, order (Br, Cy) the motion by the State of Wisconsin and its Public Service Commission for leave to intervene is denied. However, they may file an amicus curiae brief as provided for by Rule 29, FRAP. -dmf-
Aug 20	Filed Aples' opposition to Defts-Aplts' Joint motion for ext. of time to file opening briefs. 8/10. -kf-
AUG 21	Filed, as of August 20, Aples' (PACIFIC LEGAL) opposition to Aplts' motion for summary reversal & appendix. (Schickele) 8/19 -db-
AUG 28	Filed Defendants/Aplts' reply to Plaintiffs/Aples' opposition to Defendants/Aplts' motion for summary reversal. (Schickele) 8/28 -db-
AUG 28	Filed stipulation, re: defendants to be deemed aplts' and file first brief. (Schickele) -db-
Sept 7	Filed motion (State Energy Resources Conservation & Dev. Comm., et al) to dismiss cross-appeals of Pacific Legal Foundation, et al. 9/7 (Schickele) ec
Sep 17	Filed Aples' (PACIFIC LEGAL FOUNDATION, et al) opposition to motion to dismiss cross-appeal. (Schickele) 9/14 -db-
Sept 24	Filed reply to cross/aplts' opposition to motion to dismiss. (Schickele) 9/23 -db-
Nov 1	Filed order (W & Ky) aplts' motion for summary reversal in No. 79-3365 is DENIED without prejudice to reconsideration by the panel hearing the case on its merits; cross/aples' motion for dismissal of the cross-appeal in No. 79-3424 is GRANTED.
Nov 1	aplts are GRANTED an ext. of time in which to file their opening brief. The brief shall be due twenty-eight (28) days from the date of the filing of this order; and aplts are granted leave to file the appendix to their motion for summary judgment in No. 79-3365. -rmc-
Nov 1	Filed 4 aplts' appendices to Motion for Summary Reversal, recvd as of Aug 10, 1979. -rmc-
Nov 8	Filed, as of Nov. 7, aplt's motion for amendment of Order of Nov. 1, 1979 and for ext. of time to file opening brief. (Schickele) 11/1 -db-

DATE	FILINGS-PROCEEDINGS
Nov 16	Rec'd as of Nov 13, 1979, letter from L.H. Tribe, counsel for aplt's, re; motion for amendment of Nov. 1 order and motion for ext of time. (Schickele). -kf-
Dec 13	Rec'd as of Dec.6, ltr dtd Dec. 4, from Frank W.Ostrander, Jr., counsel for State of Oregon, re: will be submitting amicus curiae brief on behalf of deft/aplts, and requesting clarification of when brief would be due. (Contacted counsel to inform of status of case.) -db-
1980	
Jan 2	Ricvd orig & 24 amicus briefs (States of New York & Ohio, etc.,); (12/28/79); aplt's motion for extension to file opening brief pending. ogm
Jan 2	Filed order as of Dec. 28, 1979 (Schroeder) aplts' opening brief shall be due on or before Jan. 8, 1980. -rmc-
Jan 4	Filed as of Jan 2, motion of Minnesota Public Interest Research Group for leave to file brief as amicus curiae. (CIV-ATT, w/copy of brief.) 12/28 -db-
Jan 7	Fld mtn & ord (dep clk) granting aplts & aplts/int an ext of time to file opening brief to Feb 5, 1980. -kf-
Jan 8	R'cvd as of 1/2/80, 16 amicus (Minnesota Public Interest Research Group) briefs (motion to file pending). ogm
Jan 8	R'cvd as of 1/7/80, orig & 15 amicus (State of Minnesota, Minnesota Pollution Control Agency & State of Alabama) briefs (1/2/80). ogm
Jan 8	R'cvd as of 1/7/80, orig & 24 amicus (State of Maine) briefs (12/31/79) ogm
Jan 8	R'cvd as of 1/7/80, orig & 15 amicus (State of New Mexico) briefs; 1/4/80. ogm
Jan 8	R'cvd orig & 15 amicus (State of Connecticut) briefs (no proof of service); notified counsel. ogm (served: 1/7/80)
Jan 9	R'cvd orig & 15 amicus (State of Oregon) briefs (1/7/80). ogm
Jan 9	R'cvd orig & 15 amicus (State of Montana) briefs (1/8/80). ogm
Jan 10	Rec'd as of Jan 9, ltr dtd Jan. 7, 1980, from State of Hawaii, atty Gen's office, re: supporting amicus curiae brief of State of Oregon. -db-

DATE	FILINGS-PROCEEDINGS
Jan 10	Rec'd as of Jan. 9, State of Illinois' ltr dtd Jan 8, supporting State of Oregon's amicus brief, and a statement of interest. -db-
Jan 17	Filed order (Fr) the amicus curiae brief of the Minnesota Public Interest Research Group, recvd, is ordered filed. -rmc-
Jan 17	Filed 16 amicus (MINNESOTA PUBLIC INTEREST RESEARCH GROUP). -rmc-
Jan 28	Rec'd State of Connecticut's notice of intention to file amicus curiae brief. in support of aplt State Energy Resources Conservations & Development commission, et al. 1/20 -db-
Feb 5	Fld aplts mtn & ord (dep clk) consolidating appeals 79-3365 and 79-3382 for all further purposes of appeal. This order is subject to reconsideration if opposition fld w/in ten (10) days. -kf-
Feb 6	Fld aplt's (STATE ENERGY RESOURCES CONSERVATION & DEVELOPMENT COMM, et al.) mtn for leave to file brief in excess of fifty pages. (CIVATT) 2/5/80. -kf- (w/ copy of brief.)
Feb 8	Filed as of 2/5, amicus (New York, Ohio, etc.,) briefs already r'cvd. ogm
Feb 8	Filed as of 2/5, amicus (State of Minnesota, Minnesota Pollution Control Agency & State of Alabama) briefs already r'cvd. ogm
Feb 8	Filed as of 2/5, amicus (State of Maine) briefs already r'cvd. ogm
Feb 8	Filed as of 2/5, amicus (State of New Mexico) brief already r'cvd. ogm
Feb 8	Filed as of 2/5, amicus (State of Connecticut) briefs already r'cvd. ogm
Feb 8	Filed as of 2/5, amicus (State of Oregon) briefs already r'cvd. ogm
Feb 8	Filed as of 2/5 amicus (State of Montana) briefs already r'cvd. ogm
Feb 8	Filed as of 2/5, amicus (State of Wisconsin and Public Service Commission of Wisconsin) briefs (2/4/80). ogm

DATE	FILINGS-PROCEEDINGS
Feb 8	R'cvd as of 2/6, 16 aplts' opening briefs & 5 Excerpt (2/5); oversized; motion to file oversized opening briefs pending. ogm
Feb 14	Filed order (Cy) GRANTING aplts' motion to file an oversized brief. Further ordered aplts' brief, recvd, is ordered filed. -rmc-
Feb 14	Filed 16 aplts' opening briefs & 5 Excerpt (oversized) -rmc-
Mar 17	Fld mtn & ord (Olk) gtng Aple/Resp ext of time to fl brf to: Apr 14, 1980 bf.
Mar 25	Filed as of March 24, aplts' motion for expedited consideration of appeals nos. 79-3365 and 79-3382. (CIVATT) 3/21 -db-
Mar 25	Filed State of Maryland's motion for leave to file late a statement of interest and to join as amicus curiae the brief of New York, Massachusetts and Ohio. (CIVATT) 3/14 -db-
Mar 25	Rec'd State of Maryland's statement of interest. (Civatt) -db-
April 10	Filed in 79-3416 State of Wisconsin and the Public Service Commission of the State of Wisconsin's motion to voluntarily dismiss appeal in Case No. 79-3416. (CIVATT) 4/7 -db-
Apr 14	Filed orig & 15 aples' briefs. (4/11/80) ogm
April 16	Rec'd as of april 14, ltr dtd april 11, from Raymond M. Momboisse, counsel for Pacific Legal Foundation, re: has no objection to motion of Bruce Kahn to file brief in support of aplts, unless new points are raised which would mandate a response from Pacific Legal Foundation. (CIVATT) -db-
Apr 30	Filed orig & 15 aplt's reply briefs (4/29). ss
May 5	Rec'd aples' (pacific legal) additional citations. (to case file) -db-
May 6	Rec'd ltr dtd May 1, from California Energy Commission, re: motion that's pending to expedite appeal. (CIVATT) -db-
May 8	Rec'd aple's (PACIFIC LEGAL FOUNDATION) additional citation. (case file) db

DATE	FILINGS-PROCEEDINGS
May 9	Filed order (PRH & ALA) the motion for expedition of the appeals in Nos. 79-3365 and 79-3382 is granted. The Clk shall calendar these appeals for argument in August 1980 or as soon thereafter as is practicable; the motion of the State of Maryland for leave to file a late statement of interest and to join as amicus curiae the brief of New York, Massachusetts and Ohio is granted; and further ordered the motion of the State of Wisconsin and the Public Service Commission of the State of Wisconsin for voluntary dismissal of the appeal in No. 79-3416 is granted. -rmc-
May 9	Filed State of Maryland's statement of interest. -rmc-
May 12	Filed aples' (PACIFIC LEGAL FOUNDATION) motion to expedite appeal (CIVATT) 5/9 -db-
May 12	Rec'd ltr dtd May 9, from Pacific Legal Foundation, re: motion to expedite appeals. (CIVATT) db
Jun 5	R'cvd orig & 15 amicus (State Power to Regulate Energy Alternatives) briefs; (5/30/80); motion to file the same forwarded to docketing. ogm
June 6	Filed, as of June 5, State Power to Regulate Energy Alternatives' motion for leave to file late brief as amicus curiae. (CIVATT, w/copy of brief) 5/30 d-b-Bk
June 25	Fld as of Jun 20, 1980, State Energy Resources Conservation and Develop. Comm., et al., mtn for consolidation of ap als 79-3365, 79-3382, 80-4265, and 80-4273. (opposed by Pac. Legal Foundation) (to panel) 6/20/80. -kf-
June 26	Filed aples' (PACIFIC LEGAL FOUNDATION, et al) opposition to motion to consolidate appeals 79-3365, 789-3382, 80-4265, and 80-4273. (panel) 6/25 -db-
July 1	Filed aplts' reply memorandum in support of motion to consolidate appeals. (panel) 7/1 -db-
Jul 1	Filed order (HYC) denying the motion of State Power to Regulate Energy Alternatives for leave to file amicus curiae brief. -rmc-
July 2	Filed in order (JRB) the motion to consolidate appeals nos. 79-3365, 79-3382, 80-4265 & 80-4273 is granted. Briefs in Nos. 80-4265 & 80-4273 will be due according to the following schedule. Aplts' briefs will be due by Aug. 1. Aples' briefs will be due within 21 days after filing of aplts' briefs. Aplts may file replies within 10 days thereafter. No exts will be granted. The consolidated appeals will be heard in Oct., 1980. -rmc-

DATE	FILINGS-PROCEEDINGS
July 17	Filed in 80-4273, as of July 16, P.U.C. of the State of Calif's motion for leave to intervene as defendant (CIVATT) 7/16 -db-
July 24	Filed aple's (PACIFIC LEGAL FOUNDATION) opposition to P.U.C.'s motion for leave to intervene as defendant. (CIVATT) 7/23 db
July 25	Filed in 80-4265, aples' (PG&E) opposition to P.U.C.'s motion for leave to intervene. (CIVATT) 7/24 -db-
Jul 31	R'cvd State of Wyoming's adoption of amicus brief filed by State of Oregon. ogm
Jul 31	R'cvd State of Oklahoma's adoption of amicus brief filed by State of Oregon; (7/22) ogm
Jul 31	Filed in 80-4265 & 4273, orig & 15 amicus (State of Maine) briefs (7/29). ogm
Aug 1	Filed in 80-4265 & 4273, orig & 24 amicus (STATE OF IDAHO) briefs. (7/31) ogm
Aug 4	Filed in 80-4265, as of 8/1, orig & 15 amicus (State of Arkansas) briefs (7/31). ogm
Aug 4	R'cvd as of 8/1 in 80-4265, orig only of amicus (State of North Carolina) briefs (7/29); more copies needed; contacted counsel to send more briefs. ogm
Aug 4	Filed in 80-4265, adoption by State of Wisconsin, etc., of their amicus briefs previously filed in 79-3365 (7/30). ogm
Aug 4	Filed as of 8/1, in 80-4265, orig & 15 amicus (State of Hawaii) briefs (7/21). ogm
Aug 5	Filed in 80-4265 as of 8/1, orig & 15 amicus (STATE OF W. VIRGINIA) briefs (7/31). ogm
Aug 5	R'cvd as of 7/31 in 80-4265, orig & 3 amicus (State Corp. Commission of the State of Kansas) briefs (no proof of service; more briefs needed; notified counsel). ogm
Aug 5	Filed in 80-4265, as of 8/4, statement of Missouri Public Service Commission with regard to the consolidated appeals (8/1). ogm
Aug 5	Filed as of 8/4, orig & 15 amicus (State of Oregon) briefs in 80-4265 (7/31). ogm
Aug 5	Filed in 80-4265 as of 8/4, statement of interest of the commonwealth of Kentucky and adoption of amicus briefs filed by State of Wisconsin (7/31). ogm

DATE	FILINGS-PROCEEDINGS
Aug 5	Filed in 80-4265 as of 8/4, orig & 15 amicus (State of Iowa and Iowa State Commerce Commission) briefs (8/1). ogm
Aug 5	R'cvd as of 8/4 in 80-4265, orig & 15 aplts' opening briefs & 5 Excerpts of Record (8/1); oversized; motion to file the same oversized forwarded to civil docketing: ogm
Aug 5	filed, as of Aug. 4, aplts' (State Energy Resources Conservation. . .) motion for leave to file oversize brief. (CIVATT, w/copy of brief) 8/1 -db-
Aug 5	Filed, as of Aug. 4, State of New Hampshire's motion for leave to intervene as amicus curiae and to adopt the brief of the State of Vermont. (CIVATT) 8/1 -db-
Aug 5	Filed in 80-4265, orig & amicus (State of Vermont) briefs. (8/1) ogm
Aug 5	Filed orig & 15 amicus (Commonwealth of Massachusetts) briefs in 80-4265 (8/1). ogm
Aug 5	R'cvd in 80-4273, orig & 15 Intervenor's (PUC of State of Calif) briefs (8/4); motion to intervene pending. ogm
Aug 1	Fld mtn of State of Illinois for ext of time to file brief as amicus curiae. (CIVATT w/copy of brief.). 7/31/80. -kf
Aug 6	Rec'd orig & 15 copies amicus brief of State of Illinois. (mtn to file late pending) 8/5/80. -kf-
Aug 7	Filed as of 8/1, amicus (State of North Carolina) briefs previously r'cvd (add'l briefs r'cvd). ogm
Aug 18	Filed in 80-4265, motion of Missouri Department of Natural Resources for leave to file an amicus brief out of time. (CIVATT) 8/14 -rmc-
Aug 26	R'cvd as of 8/25, in 80-4265, orig & 15 amicus (EDISON ELECTRIC INSTITUTE) briefs in support of aples' (8/22); aplt's motion to file oversized briefs still pending. ogm
Aug 26	R'cvd consent of all parties to the filing of amicus (EDISON ELECTRIC INSTITUTE) briefs in support of aples. ogm
Aug 26	R'cvd as of 8/25, in 80-4265, orig & 15 amicus (ATOMIC INDUSTRIAL FORUM, INC.,) briefs in support of aples. (8/22); oversized (52 pgs); notified counsel. ogm
Aug 26	R'cvd as of 8/25, consent of all parties to the filing of amicus (ATOMIC INDUSTRIAL FORUM, INC.,) briefs in support of aples. ogm
Aug 26	Filed in 80-4265, aples' motion for leave to file brief in excess of fifty (50) printed pages etc. (Civatt) 8/22 -rmc-

DATE	FILINGS-PROCEEDINGS
Aug 27	Filed amicus (STATE CORP. COMMISSION OF THE STATE OF KANSAS) briefs previously r'cvd on 7/31. (served: 8/4) deficiencies corrected. ogm
Aug 27	R'cvd as of 8/26, orig & 15 aples' briefs (8/23); motion to file oversized aples' briefs pending. (panel) ogm
Sept 2	Filed in 80-4265, motion of Atomic Industrial Forum, Inc., as amicus curiae for leave to file 52-page brief with affidavit of M. Reamy Ancarrow. (Civatt) 8/27 -rmc-
Sept 3	R'cvd in 80-4265, orig & 15 aplts' reply briefs. (9/2) (panel) ogm
Sep 17	Rec'd in 80-4265, ltr dtd Sep 16, from Zev Kaplan, Dpty Atty Gen, Public Service Commission, of Nevada, re: requests to join in amicus curiae briefs submitted by the Commonwealth of Massachusetts and the State of West Virginia. (panel) -db-
Sep 23	Filed order (BBF, WJF, CJJ, and FITZGERALD, DJ) upon due consideration, the court issues the following order: (a) the motion of the California Public Utilities Commission for leave to intervene as a defendant is denied. However, the Commission's brief, heretofore rec'd, shall be filed as an amicus curiae brief; (b) all briefs, heretofore rec'd from the parties as late or oversized, are ordered filed; and (c) all motions filed after July 15, 1980 for leave to file late or oversized amici curiae briefs or to adopt briefs previously filed are granted and all such briefs, heretofore rec'd, are ordered filed. -db-
Sept 29	Filed Statement of Interest of State of Washington. 9/25 (PANEL) ec
Sept 30	R'ecvd as of 9/29, orig & 15 amicus briefs (COMMONWEALTH OF PENNSYLVANIA) (9/26); late; no motion r'cvd. (panel) ogm
Oct 9	ARGUED & SUBMITTED BEFORE FLETCHER, FERGUSON, CJJ and FITZGERALD, DJ. -db-
Oct 14	Rec'd, as of Oct 9 in LA, deft/aplts' additional authorities. (sent to panel by dpty in LA) -db-
Oct 14	Rec'd in 80-4265, as of Oct 9, in LA, aples' additional authorities. (sent to panel by dpty in LA) -db-
Oct 16	FILED as of 7/31/79 CERT RECORD ON APPEAL IN SIX VOLS, PLDGS VOL I-III, copy R/T VOL IV-VI orig pv

DATE	FILINGS-PROCEEDINGS
1981	
July 15	Filed in 80-4265, Public Service Commission of Nevada substitution of attys. Substituting Zev E. Kaplan in place of Richard H. Bryan, Atty Gen of Nevada as counsel of record. 7/14 -rmc-
Oct 7	ORDERED OPINION (FLETCHER) (FERGUSON CONCURRING) FILED & JUDG TO BE FILED & ENTD. -db-
Oct 7	Filed opinion - reversed & remanded.
Oct 7	FILED & ENTERED JUDGMENT. -db-
Oct 21	Filed aples' (PGE & S. CALIF. EDISON CO) petition for rehearing & suggestion for rehearing en banc. (panel, active judges) 10/20 db
Oct 22	Filed, as of Oct 21, defts/aplts' (State Energy Resource,) bill of costs. 10/21 -db-
Oct 22	Filed, as of Oct 20, intervenor-aplt's (Natural Resources, etc) bill of costs. 10/20 -db-
Oct 22	Filed, as of Oct 21, aples' (PACIFIC LEGAL FOUNDATION) petition for rehearing and suggestion for rehearing en banc (panel, active judges) 10/21 -db-
Nov 5	Rec'd as of Nov 4, exhibit to affidavit of William M. Chamberlain supporting aplts' bill of costs against Pacific Legal Foundation. 11/3 -db-
Nov 13	Filed as of Nov 10, aples' (PACIFIC LEGAL FOUNDATION) motion for leave to file late objections to bill of costs. (CIVATT) 11/10 db
Nov 13	Rec'd, as of Nov 10, aples' (PACIFIC LEGAL FOUNDATION) objections to bill of costs. (CIVATT) 11/10 -db-
Nov 16	Rec'd as of Nov 13, ltr dtd Nov 11, from counsel for Pacific Legal, re: regarding opposition to bill of costs. (CIVATT) -db-
Nov 20	Filed motion of Edison Elect. Institute to file out of time an amicus curiae memorandum in support of appellees' petition for rehearing & suggestion of appropriateness of rehearing en banc. 11/19 (panel) ec
Nov 20	Recvd orig & 23 amicus curiae memorandum (Edison Electric). 11/19 (panel) ec

DATE	FILINGS-PROCEEDINGS
Nov 20	Filed aplt's opposition to motion for leave to file late objections to bill of costs and response to objection to bill of costs. (CIVATT) 11/19 db
NOV 30	Filed pltfs/aples' response to opposition to motion to file objections to bill of costs. (CIVATT) 11/25 -db- (FILED AS OF NOV 25)
1982	
Jan 20	filed order (FLETCHER, FERGUSON & FITZGERALD) the petition for rehearing is denied and the suggestion for rehearing en banc is rejected.-db-
Jan 29	MANDATE ISSUED
Feb 11	Filed order (Mt.Atty for Ct) upon due consideration of the State Energy Resources Conservation and Development Commission's motion to tax costs against Pacific Gas & Electric Co. and the Southern California Edison Co., it is determined that the Commission's allowable costs on appeal are five thousand six hundred and fifty-six dollars ($5,656). That amount is awarded. This order is subject to reconsideration by a judge if any opposition is filed within ten (10) days of the entry of the order.-db-
Feb 11	Filed order (Mt.Atty for Ct) upon due consideration of the State Energy Resources Conservation and Development Commission's bill of costs, Pacific Legal Foundation's objections and the response to the objections, it is determined that the Commission is entitled to costs in the amount of eight thousand dollars ($8,000). That amount is awarded and taxed against the Pacific Legal Foundation. This order is subject to reconsideration by a judge if any opposition is filed within ten (10) days of the entry of the order.-db-
Feb 23	Filed, as of Feb 22, aples' (PACIFIC LEGAL FOUNDATION, et al) exception to order awarding and taxing costs. (CIVATT) 2/19 -db-
March 5	Filed, as of March 4, aplts' (CALIF. ENERGY COMM) response to aples' exception to order awarding and taxing costs. (CIVATT) 3/3 -db-
April 23	RECVD SC notice of filing petition for cert on 4/20/82, SC#81-1944. pn

DATE	FILINGS-PROCEEDINGS
May 18	Filed order (FLETCHER) the court has considered Pacific Legal Foundation's exception to the Feb. 11, 1982 order awarding $8,000 in costs to the State Energy Resources Conservation and Development Commission. The Foundation's arguments for reducing the award were previously taken into account and resulted in the Commission's cost bill being pared by over $2,000. The $8,000 award is reasonable and represents costs to which the Commission is entitled. db-
June 23	Filed certified copy of SC order of 6/21/82, denying cert. pn

DOCKET ENTRY NO. 79-3382.

United States Court of Appeal, for the Ninth Circuit.

Pacific Legal Foundation, a nonprofit California corporation, et al., Plaintiffs, and Robert C. Thornberry, Plaintiff-Appellee, vs. State Energy Resources Conservation and Development Commission, et al., Defendants, and Natural Resources Defense Council, Inc., et al., Defendants/Intervenors-Appellants. Companion To: 79-3416. Consolidated 79-3365, 80-4265, 80-4273. Cross-Appeal: 79-3424.

[Names and Addresses of Counsel for Parties Omitted in this Printing].

D. C. No. 78-0711. D. C. Judge Hon. Wm. B. Enright. Notice of appeal filed JUNE 20, 1979. FILED IN DC: October 2, 1978.

CIVIL. DC: SOUTHERN CALIFORNIA.

DATE	FILINGS-PROCEEDINGS
1979	
July 16	DOCKET NUMBER ASSIGNED. -db-
July 26	DOCKETED CAUSE & ENTERED APPEARANCES OF COUNSEL. db-
Aug 3	FILED as of 7/31, CERTIFICATE OF RECORD (7/30/79) ss
Aug 8	Pursuant to 28(h), Pltf (Pacific Legal) opening brief due Sept. 17, 1979. ss
Aug 9	Received in 79-3365 as of August 6, Aplt's (STATE ENERGY RESOURCES. . .) motion for ext. of time to file Opening brief. Premature, and returned to counsel -db-
Aug 9	Filed in 79-3365, Aplts' motion for summary reversal; brief in support. 8/8 (Schickele) ec
Aug 9	Filed in 79-3365, Aplts' motion for leave to file appendix to motion for summary reversal. 8/8 (Schickele) ec
Aug 10	Recvd in 79-3365, 4 Aplts' Appendices to motion for summary reversal. 8/9 (Schickele) ec

DATE	FILINGS-PROCEEDINGS
Aug 14	Filed in 79-3365, as of Aug 3, order (Br, Cy) the motion by the State of Wisconsin and its Public Service Commission for leave to intervene is denied. However, they may file an amicus curiae brief as provided for by Rule 29, FRAP. -dmf-
Aug 20	Filed Aples' opposition to Defts-Aplts' Joint motion for ext. of time to file opening briefs. -kf- 8/10.
Aug 21	Filed in 79-3365, as of August 20, Aples' (PACIFIC LEGAL) opposition to Aplts' motion for summary reversal. (Schickele) 8/19 -db-
Aug 28	Filed in 79-3365, Defendants/Aplts' reply to Plaintiffs/Aples' opposition to defendants/aplts' motion for summary reversal. (Schickele) 8/28 -db-
Aug 28	Filed in 79-3365, stipulation re: defendants to be deemed aplts and file first brief. (schickele) -db-
Sept 7	Filed in 79-3424, motion (State Energy Resources Conservation & Dev. Comm., et al) to dismiss cross appeals of Pacific Legal Foundation, et al) 9/7 (Schickele) ec
Sept 17	Filed in 79-3365, aples' (PACIFIC LEGAL FOUNDATION, et al) opposition to motion to dismiss cross-appeal. (Schickele) 9/14 -db-
Sept 24	Filed in 79-3365, reply to cross/aplts' opposition to motion to dismiss. (Schickele) 9/23/ -db-
Nov 1	Filed order in 79-3365 (W & Ky) aplts' motion for summary reversal in No. 79-3365 is DENIED without prejudice to reconsideration by the panel hearing the case on its merits; cross/aples' motion for dismissal of the cross-appeal in No. 79-3424 is GRANTED. Aplts are GRANTED an ext. of time in which to file their opening brief. The brief shall be due twenty-eight (28) days from the date of the filing of this order; and aplts are granted leave to file the appendix to their motion for summary judgment in No. 79-3365. -rmc-
Nov 1	Filed in 79-3365 4 aplts' appendices to Motion for Summary Reversal, recvd as of Aug. 10, 1979. -rmc-
Nov 8	Filed in 79-3365, as of Nov. 7, aplts' motion for amendment of order of Nov. 1, 1979 and for ext. of time to file opening brief. (Schickele) 11/1 -db-

DATE	FILINGS-PROCEEDINGS
Nov 16	Filed in 79-3365, as of Nov 13, 1979, letter from L.H. Tribe, counsel for aplt's, re: motion for amendment of Nov. 1 order and motion for ext of time. (Schickele). -kf-
1980	
Jan 2	R'cvd orig & 24 amicus briefs (States of New York & Ohio, etc.,); (12/28/79); motion by aplt to xtend time to file opening brief pending. ogm
Jan 4	Filed in 79-3365, as of Jan 2, motion of Minnesota Public Interest Research Group for leave to file brief as amicus curiae. (CIVATT, w/copy of brief) 12/28 -db-
Jan 7	Fld in 79-3365, mtn & ord (dep clk) granting aplt & aplt/int an ext of time to file opening brief to Feb 5, 1980. -kf-
Jan 7	R'cvd in 79-3365, amicus (States of N.Y., & OHIO, etc,) briefs
Jan 8	R'cvd as of 1/2/80, in 79-3365, 16 amicus (Minnesota Public Interest Research Group) briefs (motion to file pending) 12/28/79. ogm
Jan 8	R'cvd as of 1/7 in 79-3365, orig & 15 amicus (State of Minnesota, et al.,) briefs (1/2/80). ogm
Jan 8	R'cvd as of 1/7/80, orig & 24 amicus (State of Maine) briefs in 79-3365 (12/31/79). ogm
Jan 8	R'cvd as of 1/7/80 in 79-3365, orig & 15 amicus (State of N. Mexico) briefs (1/4/80). ogm
Jan 8	R'cvd in 79-3365, orig & 15 amicus (State of Connecticut) briefs (no proof of service); notified counsel. ogm
Jan 9	R'cvd in 79-3365 orig & 15 amicus (State of Oregon) briefs (1/7/80). ogm
Jan 9	R'cvd in 79-3665 orig & 15 amicus (State of Montana) briefs (1/8/80). ogm
Jan 10	Rec'd in 79-3365 as of Jan. 9, ltr dtd Jan. 7, 1980, from State of Hawaii, Atty Gen's office, re: supporting amicus curiae brief of State of Oregon. -db-
Jan 10	Rec'd in 79-3365, as of Jan. 9, State of Illinois' ltr dtd Jan. 8, supporting State of Oregon's amicus brief, and a statement of interest. -db-
Jan 17	Filed order in 79-3365 (Fr) the amicus curiae brief of the Minnesota Public Interest Research Group, recvd, is ordered filed. -rmc-

DATE	FILINGS-PROCEEDINGS
Jan 17	Filed in 79-3365 16 amicus briefs (MINNESOTA PUBLIC INTEREST RESEARCH GROUP) -rmc-
Jan 28	Rec'd in 79-3365, State of Connecticut's notice of intention to file amicus curiae brief in support of aplt State Energy Resources Conservations & Development commission, et al. 1/20 -db-
Feb 5	Fld in 79-3365 aplts mtn & order (dep clk) consolidating appeals 79-3365 and 79-3382 for all further purposes of appeal. This order is subject to reconsideration if opposition fld w/in ten (10) days. -kf- "FOR FURTHER PROCEEDINGS SEE 79-3365"
Jun 25	Fld in 79-3365, as of June 20, 1980, State Energy Resources Conservation and Develop. Comm., et al., mtn for consolidation of appeals 79-3365 79-3382, 80-4265 and 80-4273. (opposed by Pac. Legal Foundation) (to panel) (6/20/80.) -kf-
June 26	Filed in 79-3365, aples' (PACIFIC LEGAL FOUNDATION, et al) opposition to motion to consolidate appeals 79-3365, 79-3382, 80-4265 and 80-4273. (panel) 6/25 db-
July 1	Filed in 79-3365, aplts' reply memorandum in support of motion to consolidate appeals. (panel) 7/1 -db-
July 1	Filed in 79-3365, order (HYC) denying the motion of State Power to Regulate Energy Alternatives for leave to file amicus curiae brief. -rmc-
July 2	Filed in 79-3365, order (JRB) the motion to consolidate appeals nos. 79-3365, 79-3382, 80-4265 & 80-4273 is granted. Briefs in Nos. 80-4265 & 80-4273 will be due according to the following schedule. Aplts' briefs will be due by Aug. 1. Aples' briefs will be due within 21 days after filing of aplts' briefs. Aplts may file replies within 10 days thereafter. No exts will be granted. The consolidated appeals will be heard in Oct., 1980. -rmc-
July 17	Filed in 80-4273, as of July 16, P.U.C. of the State of Calif's motion for leave to intervene as defendant. (CIVATT) 7/16 -db-
July 24	Filed in 79-3365, aple's (PACIFIC LEGAL FOUNDATION) opposition to P.U.C.'s motion for leave to intervene as defendant. (CIVATT) 7/23 -db-
July 25	Filed in 80-4265, aples' (PG&E) opposition to P.U.C.'s motion for leave to intervene. (CIVATT) 7/24 -db-

DATE	FILINGS-PROCEEDINGS
July 31	Filed in 80-4265 & 4273, orig & 15 amicus (State of Maine) briefs (7/29). ogm
Aug 1	Filed in 80-4265 & 4273, orig & 15 amicus (STATE OF IDAHO) briefs. (7/31) ogm
Aug 4	Filed in 80-4265 as of 8/1, orig & 15 amicus (State of Arkansas) briefs (7/31). ogm
Aug 4	R'cvd as of 8/1 in 80-4265, orig only of amicus (State of North Carolina) briefs; (7/29); needs more copies; contacted counsel. ogm
Aug 4	Filed in 80-4265 as of 8/1, adoption by State of Wisconsin, etc., of their amicus briefs previously filed in 79-3365 (7/30) ogm
Aug 4	Filed as of 8/1, in 80-4265, orig & 15 amicus (State of Hawaii) briefs (7/21). ogm
	SEE PROCEEDINGS IN 79-3365
Oct 9	ARGUED & SUBMITTED BEFORE FLETCHER, FERGUSON, CJJ and FITZGERALD, DJ. -db-
Oct 14	Rec'd in 79-3365, as of Oct 9 in LA, deft/aplts' additional authorities. (sent to panel by dpty in LA) -db-
Oct 14	Rec'd in 80-4265, as of Oct 9, in LA, aples, additional authorities. (sent to panel by dpty in LA) -db-
1981	
July 15	Filed in 80-4265, Public Service Commission of Nevada substitution of attys. Substituting Zev E. Kaplan in place of Richard H. Bryan, Atty Gen of Nevada as counsel of record. 7/14 -rmc-
Oct 7	ORDERED OPINION (FLETCHER) (FERGUSON CONCURRING) FILED & JUDG TO BE FILED & ENTD. -db-
Oct 7	Filed opinion - reversed & remanded.
Oct 7	FILED & ENTERED JUDGMENT. -db-
Oct 21	Filed in 79-3365, aples' (PGE & S. CALIF. EDISON CO) petition for rehearing and suggestion for rehearing en banc. (Panel, active judges) 10/20 -db
Oct 22	Filed in 79-3365, as of Oct 21, defts/aplts' (State Energy Resource) bill of costs. 10/21 -db-
Oct 22	Filed in 79-3365, as of Oct 20, intervenor/aplt's (NATURAL RESOURCES) bill of costs. 10/20 -db-

DATE	FILINGS-PROCEEDINGS
Oct 22	Filed in 79-3365, as of Oct 21, aples' (PACIFIC LEGAL FOUNDATION) petition for rehearing & suggestion for rehearing en banc (panel, active judges) 10/21 -db-
Nov 5	Rec'd in 79-3365, as of Nov 5, exhibit to affidavit of William M. Chamberlain supporting aplts' bill of costs against Pacific Legal Foundation. 11/3 -db-
Nov 13	Filed in 79-3365, as of Nov 10, aples' (PACIFIC LEGAL FOUNDATION) motion for leave to file late objections to bill of costs. (CIVATT) 11/10db-
Nov 13	Rec'd in 79-3365, as of Nov 10, aples' (PACIFIC LEGAL FOUNDATION) objections to bill of costs. (CIVATT) 11/10db
Nov 16	Rec'd in 79-3365, as of Nov 13, ltr dtd Nov 11, from counsel for Pacific Legal, re: regarding opposition to bill of costs. (CIVATT) =db=-
Nov 20	Filed in 79-3365, motion of Edison Electric Institute to file out of time an amicus curiae memorandum in support of appellees' petition for rehearing and suggestion of appropriateness of rehearing en banc. 11/19 (panel) ec
Nov 20	Recvd in 79-3365, an orig & 23 Memorandum (Edison Electric). 11/19 panel ec
Nov 20	Filed in 79-3365, aplt's opposition to bill of costs. (CIVATT) 11/19 -db-
Nov 30	Filed in 79-3365, as of NOV 25, pltfs/aples' response to opposition to motion to file objections to bill of costs. (CIVATT) 11/25 -db-
1982	
Jan 20	Filed in 79-3365, order (FLETCHER, FERGUSON & FITZGERALD) the petition for rehearing is denied and the suggestion for rehearing en banc is rejected -db-
Jan 29	MANDATE ISSUED
Feb 11	Filed in 79-3365, order (Mt.Atty for Ct) upon due consideration of the State Energy Resources Conservation and Development Commission's motion to tax costs against the Pacific Gas & Electric Co. and the Southern California Edison Co., it is determined that the Commission's allowable costs on appeal are five thousand six hundred and fifty-six dollars ($5,656). That amount is awarded. This order is subject to reconsideration by a judge if any opposition is filed within ten (10) days of the entry of the order .db

DATE	FILINGS-PROCEEDINGS
Feb 11	Filed in 79-3365, order (Mt.Atty for Ct) upon due consideration of the State Energy Resources Conservation and Development Commission's bill of costs, Pacific Legal Foundation's objections and the response to the objections, it is determined that the Commission is entitled to costs in the amount of eight thousand dollars ($8,000). That amount is awarded and taxed against the Pacific Legal Foundation. This order is subject to reconsideration by a judge if any opposition is filed within the (10) days of the entry of the order. -db-
Feb 23	Filed in 79-3365, as of Feb 22, aples' (PACIFIC LEGAL FOUNDATION, et al) exception to order awarding and taxing costs. (CIVATT) 2/19 -db-
March 5	Filed in 79-3365, as of Mar 4, aplts' (CALIF. ENERGY COMMISSION) response to aples' exception to order awarding and taxing costs. (CIVATT) 3/3 -db-
April 23	RECVD SC notice of filing petition for cert on 4/20/82, SC#81-1944. pn
June 23	Filed certified copy of SC order of 6/21/82, denying cert. pn

2. Docket Entries in Case No. CV S-78-527-R, United States District Court for the Eastern District of California.

United States District Court for the Eastern District of California.

Pacific Gas & Electric Company and Southern California Edison Company, Plaintiffs, vs. State Energy Resources Conservation & Development Commission, Richard L. Maullin, et al. Defendants.

CAUSE

28 USC 1331 (a) and 1337, 42 USC 2011 - Complaint alleging building of nuclear power plant unconstitutional.

[Names and Addresses of Counsel for Parties Omitted in this Printing].

DATE	NR.	PROCEEDINGS
1978		
10-2	1	Complt Iss sums.
10-5	2	Retn on sums exe on (6).
10-18		Ldgd stip ext time.
10-19	3	Stip & ord ext time to plead to 12-4-78.
11-3	4	Pltf 1st amd complt. No sums iss'd.
11-20		Ldg stip & ord ext time
11-22	5	Stip & ord ext time to ans.
12-11		Ldgd stip ext time.
12-13	6	Stip & ord ext time to ans to 12-15-78.
12-18	7	Defts Notc of & Mot/Dismiss. 2-5-79; p/a in suppt.
12-22	8	Interv notc/mot intervene set for 1-22-79.
	9	Interv memo pts/auth in suppt of mot.
	10	Interv aff R. Beers.
	11	Interv aff D. Pesonen.
	12	Interv aff P. Swatek.
	13	Interv aff D. Roe.
	14	Cert serv of doc #7-13.
	15	Interv proposed answer in interv.
12-26	16	ORD: re-set mot/intervene to 3-19-79 @11:00; & mot/dism re-set to 4-30-79 @2:00.

DATE	NR.	PROCEEDINGS
1979		
2-20	17	Pltf memo in opp to mot/intervene.
3-5	18	Reply memo in suppt of interv mot.
3-5	19	Deft memo in response to interv mot.
3-12		REc'd ltr of W. Chamberlain re Judge Enright decision. Ref lc.
3-19		*Minutes*: Deft-Intervenors Mot/Interven Grntd.
3-22		Rec'd ltr w/cy of State memo in opp to S.J. before Judge Enright. Ref lc.
3-23	20	Reptr transc mot/interv dtd 3-19-79.
3-30	21	Withdrwl of counsel - Mitchell, Silberberg & Knupp
4-2	22	Pltf memo in opp to deft mot/dism.
4-3		Rec'd ltr of K. Manaster re briefing schedule on mot/ dism.
4-6	22a	Cert serv of lodged ord. (ldg ord)
	22b	Notc/chg address of Environmental Interv.
4-10	23	Interv memo pts/auth in suppt of mot/dism.
4-16	24	Pltf memo in reply to interv memo. in suppt of mot/ dism.
	25	Deft reply memo in suppt of mot/dism.
4-17	26	ORD grtd Environmental Interv mot/interv. Rec'd ltr of W. Chamberlain w/exh C to doc #25.
4-19	27	ORD: case dropped fr TJM 4-30-79 cal. To be re-assign
6-21	28	*Order*: Case reassigned to Judge Manuel Real, documents to be filed w/Eastern District, & oral arguments set in San Francisco on 7-13-79 at 10:00 am.
7-5	29	Interv sub of attys.
7-18		Rec'd ltr & cpy of ord on defts' mot/dism sent to Judge Real.
7-20	30	Interv req for cert of ord on mot/dism.
7-27	31	Reporter's transcript - 7-13-79.
	32	*Ans in intervention* of Natural Resources, Sierra Club, Environmental Defense & Californians for Nuclear Safeguards.
7-31	33	Deft mot/cert of appeal pursuant to 28 USC 1292(b).
8-6	34	Ord: Deft mot/dism 1st & 2nd claims of 1st amd complt denied; deft mot/dism 3rd claim of 1st and complt grntd.
	35	Deft & interv joint 1st set interrogs to (P) PG&E.
	36	Deft & interv joint 1st set interrogs to (P) South Calif Edison.
	37	Deft & interv cert/serv re #35 & #36.

DATE	NR.	PROCEEDINGS
8-9	38	Pltf notc of crt's action on mot/dism. Cpy mld to Judge Real.
8-13	39	Ord denying certification.
8-15	40	*Ans to 1st amd complt.*
8-16	41	Deft's depsn notc - P.G.&E. & So. CA Edison Co.
	42	Deft's & Intervenor's 1st req for prod/docs — P.G.&E. & So. CA Edison Co.
1979		
8-23	43	Deft cert/serv re #41 & #42.
8-29	44	Deft notc/depsn (3) - E. E. Hall, B. W. Shackelford & W. R. Gould.
8-30	45	Deft's notc/claim of unconstitutionality.
9-11	46	Pltf Notc of Motion for S.J. 10-9-79 Before Judge Real
	47	Aff of Barton W. Shackelford & David J. Fogarty in suppt.
	48	Memo of pts & auths in suppt of mot/S.J.
	49	Stmt of material facts.
	50	Exhibits in support of mot/S.J.
	51	Pltf's Obj's to defts' & intervenors joint 1st set of interrog's.
9-12		Copies of documents #46 - 49 mailed to Judge Real for Review.
9-14	52	Deft x-parte applic for ord shortening time/hrg on mot/ cont S.J. & cont of tr
	53	Deft & Intervenor's notc & mot/cont of hrg on mot/S.J. & Cont of trial (not) pts & auths in suppt, decl in suppt.
	54	Deft notc/depsn - David J. Fogarty
	55	Deft corrected notc/depsn - P.G. & E.
	56	Deft corrected notc/depsn - So. CA Edison Co.
		Ldgd ord grnting mot/shorten time
		Ldgd ord grnting mot/cont of hrg S.J. & trial.
		Notc: Set for hrg on cont of S.J. & trial in L.A. before Judge Real @ 2:30. 9-
		Mld copies of docs #52-#56 to Judge Real for hrg.
9-17	56	Deft & intervenor's notc & mot/compel ans to interrogs
	57	Deft memo of pts & auths in suppt of mot/compel
		Ldgd ord grnting mot/compel.
		Copies of docs 56 & 57 mld to Judge Real.
	58	Pltf P.G. & E. Answers to 1st set of interrogs.
	59	Pltf So. CA Edison Answers to 1st set of interrogs.
		Copies of docs 58 & 59 mld to Judge Real.

DATE	NR.	PROCEEDINGS
9-18	60	Deft & intervenor's notc & mot/compel fur ans to interrogs
	61	Deft memo of pts & auths in suppt of mot/compel fur ans.
		Ldgd prop ord grnting mot/compel.
		Notc: Hrg on mots reset to 9-20-79 @ 2:00 in Sacto.
9-19	62	Deft notc/amd depsn sched.
9-20	63	Pltf P.G.&E. response to 1st req for prod of docs.
	64	Pltf So. CA Edison resp to 1st req for prod of docs.
	65	Pltf pts & auths in opp to deft mot/cont hrg on mot/S.J. & trial
	66	Pltf pts & auths in opp to deft mot/compel fur ans to interrogs.
		Minutes: Deft & Intervenors mot/cont hrg on S.J. & cont trial Granted & D Mot/comp fur ans to interrogs Granted. Ord to be prep by pltf & deft
9-28	67	Pltf fur ans to joint 1st set of interrogs. (P.G.&E.)
		Ldgd ord on deft mots/compel ans & fur ans to interrogs.
	68	Pltf So. Cal Edison fur ans to joint 1st set of interrogs
10-3	69	Deft notc/depsn — Richard F. Locke
	70	Deft notc/depsn — James A. Beoletto
10-4	71	Pltf decl of Richard F. Locke.
10-5	72	Stip re nondisclosure of certain docs of pltf P.G.&E.
10-11	73	Pltf's notc mot/mot protect ord & app & ord short/time, declar, pts & auth. Before Judge Real in L.A.
10-12	74	Intervenors memo of pts & auth in res to pltfs' mot/protect ord.
	75	Affid of Roger Beers
10-15	76	Pltf decl of J.A. Beoletto
	77	Order: on Deft's & Intervenor's mot/compel ans to interrogs.
		Rec'd Minutes of 10-5-79- Pltf mot/Protective Ord Denied. Fur hrg set 11-9-79
10-18	78	Pltf corrections of pts & auths in suppt of mot/S.J.
10-25	79	Deft notc/depsn — Nolan Daines
	80	Deft notc/depsn — M. Douglas Whyte
	81	Deft notc/depsn — H. Fred Christie
10-29	82	Stip & Order on Pltf mot/S.J.
	83	Deft's notc taking deposn of James O. Schuyler
	84	Deft's notc taking deposn of Frederick W. Meilke, Jr.
	85	Deft's memo of pts & auth opp to Pltf's mot/S.J.
	86	Deft's declar in suppt of memo in opp to pitf's mot/S.J.
	87	Deft's exhibs in suppt of memo in opp to pltf's mot/S.J.

DATE		FILINGS-PROCEEDINGS
10-30	88	Intrv Natural Resources Def Council affs in oppo Pltfs mot/S.J.
	89	Pts/auths re affs #88
11-7	90	Depsn of Elmer Ernest Hall, Jr. (Vol. 1 & 2)
	91	Depsn of Barton W. Shackelford. (Vol. 1-4)
	92	Portions of depsn cited in reply memo suppt Pltf mot/ S.J.
	93	Pltf reply memo sup mot/S.J.
11-9		Ldgd plft proposed judgment
11-9		Minutes: Pltf mot/S.J. ordered under submission. Trial set for 12-5-79 for four days to the court (Before Judge Real).
11-13	94	Depsn of William Richard Gould.
	95	Depsn of Richard Francis Locke.
	96	Depsn of David J. Fogarty. Vol 1-5
11-19		Rec'd ltr re case filings
	97	Aff of Kathryn Burkett Dickson suppt memo in oppo of mot/S.J.
		Ldgd ord deny Plt mot/ S.J. w/o prej & set trial 12-5-79
11-20		Notc: C/T reset to 12-18-79 at req of Judge Real.
11-21	98	Pltf portions of depsn of William R. Gould.
	99	Pltf portions of depsn of Barton E. Shackelford.
11-7		Ldgd notc & ord clarifying trial procedures & ord shorten time. (refer Judge Real)
	100	Deft & interv memo pts/auths suppt motion for clarification of trial procedures.
		Rec'd ltr re trial procedures.
12-10		Notice: court trial re-set to 1-14-80 @ 10:00.
12-14	101	Pltf memo in response to mot/for clarification of trial procedures.
12-17	102	Deft cert of personal service.
	103	Deft & interv reply memo in suppt of mot/clarification trial procedures.
12-26	104	Ord: Deny mot/ for clarification of discov & trial procedures.
12-28	105	Notc of depsn of Raymond Czahar.
	106	Notc of depsn of Mason Willrich.
1980		
1-3		Rec'd ltr re trial setting & procedures.

DATE		FILINGS-PROCEEDINGS
1-7		Ldgd ord stay commencement of trial. (refer to Judge Real)
	107	Deft mot/stay of commencement of trial. (refer to Judge Real)
	108	Deft notice of amended depsn schedule.
	109	Depsn of Gary Simon.
1-9		Ldgd ord pursuant to Federal Rule of Civil Procedure.
	110	Pltf memo re mot/stay of commencement of trial.
	111	Deft direct testimony of Frank Hahn.
	112	Deft direct testimony of Gary Simon.
	113	Deft direct testimony of Emilo E. Varanini, III.
	114	Deft direct testimony of Raymond J. Czahar.
	115	Cert of Service.
1980		
1-9		Ldgd interv ord pursuant to Federal Rule of Civil Procedure 56 (d).
	116	Interv memo concerning proposed orders under 56(d).
	117	Depsn of Irvin C. Bupp.
	118	Proof of service.
1-11	119	Pltf portions of depsn of Frederick W. Mielke. Rec'd ltr re depsn of Gary Simon.
	120	Corrections of depsn of Gary Simon.
	121	Depsn of Frank J. Hahn.
	122	Depsn of Frederick William Mielke.
	123	Depsn of Geoffrey T. Skidmore.
	124	Depsn of James O. Schuyler.
	125	Depsn of Nolan H. Daines.
	126	Depsn of Elmer Ernest Hall.
1-14	127	Interv excerpts from depsns. (Excerpts in separate envelope #127)
	128	Depsn of Emilio E. Varanini, III.
	129	Depsn of Irvin C. Bupp.
	130	Deft directtest of John E. Bryson.
	131	Interv excerpts frm depsn of William Richard Gould.
	132	Interv excerpts frm depsn of Frederick William Mielke.
	133	Interv excerpts frm depsn of Barton W. Shackelford.
	134	Defts submission of transc, excerpts of Mason Willrich, to estab right to X-xam
	135	Defts submission of transc excerpts of Frederick J. Mielke.

DATE		FILINGS-PROCEEDINGS
	136	Defts submission of transc excerpts of Fogarty, Hall, Schuyler, Whyte, Daines, Shackleford, & Gould to estab right to X-exam these wit.
	137	Proof of service.
	138	Pltf memo re proposed orders pursuant to F.R.C.P. 56 (d).
	139	Ord: re F.R.C.P. 56 (d). Minutes: Wit sworn, exht marked into evidence & portions of depsn put on rcr. Trial cont 1-15-80.
1-15	140	Pltf exht #10 (under seal; in vault) Minutes: Wit sworn, exht marked final arguments began but further trial of this case is cont to 1-18-80 in LA.
1-16		Memo all original exht submitted in case were sent to MLR in LA.
1-17	141	Ord: Writ of mandamus is denied.
1-23		Rec'd Minutes: Court hears oral argument from counsel. Court orders matters submitted and directs each party to submit proposed Findings of Fact & Concl of Law & Judgment w/in 10 days.
1-24	142	Pltf portions of depsn as Bupp, Jr.
	143	Depsn of John E. Bryson.
	144	Depsn of Raymond J. Czahar.
1-28		Ldgd intervrns proposed alternative judgment. (Sent to MLR)
	145	Deft & intervnr proposed findings of Fact & concl of law. Ldgd defts proposed judgment. (Sent to MLR)
1-30		Ldgd pltf proposed findings of fact & concl of law (original filed in L.A. w/ MLR.)
	146	Pltf memo re relief sought in respect of Public Resources. Rec'd ltr re filing of docs filed on Jan. 30, 1980. Ldgd proposed judgment (original filed in L.A. w/ MLR.)
2-1		Ldgd Defts proposed Judgment.
2-7	147	Defts' memo re pltfs' prop fndgs.
2-8	148	Pltf reply to memo re prop fndgs.
2-12		Mld #147, 148 and proposed ord to MLR.
4-21	149	Deft Notc of chng of add of attys
4-22	150	Aff of Gregory A. Thomas, Cert of cnsl.
4-24	151	Intervenor's memo pts & auth re disqualif of Judge Real.

DATE		FILINGS-PROCEEDINGS
4-25	152	Deft, St Energy Resources Comm memo pts/auths re disqualif of MLR.
	153	Aff of Emilio E. Varanini, III to disqualify MLR
	154	Cert of cnsl.
	155	Aff of Michael R. Jencks.
	156	ORD: Opinion
	157	ORD: Findings of Fact & Concl of Law
	158	ORD: Judgment.
4-28	159	Judgment entered this date.
5-7	160	Pltf mot/tax costs suppt bill of costs. Bill of costs.
5-23	161	Notice of appeal, for deft interv, Natural Res Defense Council et al.,
	162	Notice of Appeal, for deft St Energy Resc Conservation, et al.,
		Ltr to MLR frm Atty Steven Harbison, re ord frm 2-28-78 in case #79-2073R.
6-5		Ltr req transcripts of proceedings for appeal.
6-6		Rtn fee pd notc frm 9th Cir. St. Energy Res Conserv #80-4265
		Rtn fee pd notc frm 9th Cir #80-4273
6-20	163	Transcripts of proceedings of 11-9-79.
	164	Transcripts of proceedings of 7-13-79.
6-25	165	Deft designation of reporters transcripts.
7-7	166	ORD: grant mot/tax costs
7-30	167	Transcripts of proceedings on appeal Volume #1 (1-14-80 hrg)
	168	Transcripts of proceedings on appeal Volume #2 (1-15-80 hrg)
7-31		Mld cert of rcrd to 9th Cir.
8-18		Rec'd copy of design of rcrd. (orig to follow)
8-20	169	Appellant's design of rcrd on appeal.
8-25	170	Pltf design of rcrd on appeal.

3. Status of Nuclear Fuel Reprocessing, Spent Fuel Storage and High-Level Waste Disposal, Draft Report, Nuclear Fuel Cycle Committee, California Energy Commission, Dated January 11, 1978 (Filed September 11, 1979 in the District Court in Support of Plaintiffs' Motion for Summary Judgment).

United States District Court for the Eastern District of California.

[Case omitted in printing.]

STATUS OF
NUCLEAR FUEL REPROCESSING
SPENT FUEL STORAGE
AND
HIGH-LEVEL WASTE DISPOSAL

DRAFT REPORT

NUCLEAR FUEL CYCLE COMMITTEE
CALIFORNIA ENERGY COMMISSION

JANUARY 11, 1978

NOTICE

This is the proposed report on the status of nuclear fuel reprocessing, spent fuel storage and high-level waste disposal based upon the inquiry conducted by a Committee of the Commission (E. E. Varanini, presiding member, and R. L. Maullin). The report must be adopted first by the Committee and then the full Commission before being transmitted to the Governor and the Legislature. The report is written as if it is a Commission report in order to minimize editing in subsequent steps. The reader should note that the conclusions and recommendations in this document are solely the proposed view of the Committee until the Commission adopts or rejects them. The report is subject to revision prior to adoption.

FOREWORD

This report presents an analysis of the current status of technologies and issues in the major portions of the back-end of the nuclear fuel cycle. Over the past 15 months, the Commission has conducted an intensive technical and programmatic investigation of the federal programs for nuclear fuel reprocessing, spent fuel storage, and waste disposal. This inquiry was mandated by the statutes enacted in 1976 proscribing new nuclear plant certification in the state until the Commission has verified that certain specified criteria for development of technical solutions have been met.

In July, 1977, an Interim Report on Nuclear Fuel Reprocessing and High-Level Waste Disposal was prepared at the request of the Legislature. It summarized the investigation and highlighted further areas for inquiry.

The 1976 nuclear statutes required no interim findings by the Commission but only findings that the specific criteria had been met. However, AB 1852 enacted in November, 1977 (Cal. Pub. Res. Code Section 25524.25) placed a new requirement on the Commission to determine by mid-January, 1978, whether all specified findings could or could not be made at that time and, if not, whether in the opinion of the Commission a statutory exemption should be given to one proposed utility nuclear project.

This report specifically presents the conclusion and analysis of the Commission's fuel cycle investigation committee as to whether the findings of the nuclear statutes can be made at this time. The question of exemption is dealt with in other documents.

Though a comprehensive report may not have been required by AB 1852, we felt it important to present to the Legislature and the public as complete a statement of our conclusions and our reasons as was possible. From the be-

ginning we considered that goal to be almost impossibly demanding given the brief time allowed. However, through extraordinary efforts and exceptional perseverance, the report has been produced. The majority of the credit for this outstanding effort goes to the staff of the Nuclear Assessments Office and the assistance of consultants and technical reviewers from other units of the Commission staff, from other state agencies, and from federal government agencies. We also wish to acknowledge the patience and diligence of numerous support staff without whose help this document would not have been possible.

Finally, we appreciate the help of the scientists and technician in the field whom we visited to gain insight from those working closest to the problem. We were very impressed with their dedication and competence. We are very grateful for their candor and feel they made a substantial contribution to this report.

/s/ Emilio E. Varanini, III
EMILIO E. VARANINI, III
Commissioner
Presiding Member of Nuclear
Fuel Cycle Committee

TABLE OF CONTENTS

Page

1.0 INTRODUCTION .....
1.1 The California Nuclear Assessment .....
2.0 NUCLEAR FUEL REPROCESSING .....
2.1 Summary .....
2.2 Reprocessing Requirement .....
2.2.1 Summary .....
2.2.2 Introduction .....
2.2.3 The Proliferation Concern and the Shift in Federal Policy .....
2.2.4 The Changing Assumptions About Reprocessing .....
2.2.4.1 Economics and Resource Conservation .....
2.2.4.2 Waste Management .....
2.2.4.3 Introduction of the Breeder .....
2.2.5 Reprocessing Not Required in a Strict Technical Sense
2.2.6 Reprocessing and Reliable LWR Operation .....
2.2.7 Conclusion .....
2.3 Reprocessing Technology Assessment .....
2.3.1 Summary .....
2.3.2 "Existence of a Technology" vs. "Existence of a Technology for Plant Operation" .....
2.3.3 Definition of a Reprocessing Plant .....
2.3.4 Existence of Reprocessing Technology .....
2.3.4.1 Separations .....
2.3.4.2 Uranium Conversion .....
2.3.4.3 Uranium Conversion .....
2.3.4.3 Plutonium Conversion .....
2.3.4.4 Waste Solidification .....
2.3.4.5 Off-Gas Control .....
2.3.4.6 Conclusion .....
2.3.5 Technology for Operation of Reprocessing Plants .....
2.3.5.1 Technical Operability .....
2.3.5.2 Licensability .....
2.3.5.3 Conclusion .....
2.4 Approval of Reprocessing Plants .....
(References) .....

3.0 SPENT FUEL STORAGE .....
3.1 Summary .....
3.2 The Spent Fuel Storage Problem .....
3.2.1 Background .....
3.2.2 Effect on LWR Reliability .....
3.2.3 Projected Shortfalls .....
3.3 The Legislative Response .....
3.4 Options for Maintaining FCDC .....
3.4.1 Expanded On-Site Pool Storage .....
3.4.2 Retrievable Away-From-Reactor (AFR) Storage .....
3.4.2.1 Independent Spent Fuel Storage Pools .....
3.4.2.2 Dry Surface Storage .....
3.4.2.3 Retrievable Storage in a Geologic Repository .....
3.4.3 Geologic Disposal of Spent Fuel .....
3.5 Prospective Availability of Alternative Storage Options .....
3.6 The Prudent Option—Increased On-Site Storage .....
3.7 The Outlook for California .....
3.8 Conclusions and Recommendations .....
(References) .....

Page

4.0 HIGH-LEVEL WASTE DISPOSAL .....
4.1 Summary .....
4.2 Introduction .....
4.3 Review of the Existence of a Demonstrated, Developed High-Level Waste Disposal Technology .....
4.3.1 Disposal Alternatives Under Study .....
4.3.2 Demonstration of Waste Disposal Technology .....
4.3.3 Postulated Attractive Features of Geologic Formations for Waste Isolation .....
4.3.4 Conditions for Demonstrating Isolation .....
4.3.4.1 Status of Knowledge of Key Desirable Features ..
4.3.4.2 Need for Additional Site Specific and *In Situ* Testing .....
4.3.4.3 Data from Previous Experiences .....
4.3.4.4 Finding a Site with the Right Conditions .....
4.3.4.5 Specification of Acceptance Criteria .....
4.3.4.6 Assuring Isolation Safety Assessment .....
4.3.5 General Views on Demonstration and Existence of Waste Disposal Technology .....
4.4 Conclusions .....
4.5 Recommendations for Federal Programs .....
4.6 Approval of High-Level Waste Disposal Technology .....
(References) .....
Appendix A: Existence and Demonstration of Technologies .....
Appendix B: Approval by Authorized Agencies of the United States
Appendix C: Definition of High-Level Wastes .....

SECTION 1.0: INTRODUCTION

In June 1976 the California Legislature passed three bills in response to the public debate over nuclear power. Two of those bills, now Cal. Pub. Res. Code Sections 25524.1 and 25524.2, charge the Energy Commission to:

1. Determine whether the technology for construction and operation of nuclear fuel reprocessing plants exists and has been approved by the appropriate federal agency.
2. Determine whether a demonstrated technology or means for permanent, terminal disposal of high-level nuclear waste exists and has been approved by the appropriate federal agency.
3. Make case-by-case findings on the availability and adequacy of facilities to reprocess or store spent fuel rods from nuclear reactors in order to maintain a full core discharge reserve in on-site storage facilities.

Until the Commission finds that waste disposal and reprocessing technologies meet these tests, the law prohibits certification of any new nuclear powerplants in California.

In September 1977, AB 1852 (PRC 25524.25) was passed. It requires that the Commission determine whether all of the findings required by Sections 25524.1 and 25524.2 can be made at this time. This report is the Commission's response to that order.

Our conclusions, documented in the text of this report, are as follows:

1. Because of recent reversals of federal policy, reprocessing is no longer a required step in the fuel cycle for light water reactors. Furthermore, our own analysis shows that reprocessing is neither necessary nor desirable for economic and proliferation reasons. Therefore, Section 25524.1(a)

does not at this time apply to new light water reactors proposed in California.

2. Nonetheless, our investigation leads to the conclusion that the findings required by Section 25524.1(a) cannot be made at this time in any case.
3. The affirmative findings on waste disposal technology required by Section 25524.2 cannot be made at this time.

In addition, the Commission will require that any future prospective nuclear power plant operator using a "once-through" (no reprocessing) cycle show firmly committed uranium sources sufficient to fuel the proposed plant throughout its design lifetime. The Commission will also consider appropriate requirements for spent fuel storage capacity at proposed nuclear powerplant sites.

Because of rapidly changing federal policies and the continuing development work being done on nuclear fuel cycle technologies, the Commission staff will continue to monitor fuel cycle technologies to determine if positive findings can be made at some future date.

This review will serve as the basis for those continuing efforts. A large body of evidence has now been accumulated; this mass of information will continue to be analyzed and updated as the Commission continues its review awaiting evidence needed for positive findings.

1.1 *The California Nuclear Assessment*

With the enactment of the nuclear statutes in June 1976, California initiated its independent investigation of the nuclear fuel cycle. The statutes were the result of an extensive inquiry into nuclear power issues prior to the vote on Proposition 15, the Nuclear Safeguards Initiative. A series of hearings before the Assembly Committee on Resources,

Land Use, and Energy brought into focus the conflicts, contradictions, and uncertainties in the direction of the nuclear fuel cycle. The Committee's response was to introduce the nuclear bills, which ultimately became law.

The statutes set three basic tests that must be met before the Commission can certify new nuclear plants:

- The commission finds that the United States through its authorized agency has identified and approved, and there exists a technology for the construction and operation of, nuclear fuel rod reprocessing plants. (§ 25524.1(a)(1))
- The commission shall further find on a case-by-case basis that facilities with adequate capacity to reprocess nuclear fuel rods from a certified nuclear facility or to store such fuel if such storage is approved by an authorized agency of the United States are in actual operation or will be in operation at the time such nuclear facility requires such reprocessing or storage; provided, however, that such storage of fuel is in an offsite location to the extent necessary to provide continuous onsite full core reserve storage capacity. (§ 25524.1(b))
- The commission finds that there has been developed and that the United States through its authorized agency has approved and there exists a demonstrated technology or means for the disposal of high-level nuclear waste. (§ 25524.2(a))

These tests seek solutions to what were called "stipulated problems" in a report by the committee which authored the bills. Those problems were ones which were viewed with concern not only by nuclear critics, but by industry and government witnesses before the Assembly Committee. As the legislative report noted, these were "largely economic or the result of poor planning, *not* safety-related". (*Assembly Report*, p. 19)

The statutes vest the Commission with the responsibility of determining if these solutions are available. Ultimate review and decision-making are left to the Legislature.*

Because the "stipulated problems" affected the reliability and cost of electricity for the state, the approach adopted was to effect a pause in the further development of nuclear plants until those problems had been dealt with. That approach has been advocated by others. The United Kingdom's Royal Commission on Environmental Pollution recommended:

> . . . [t]here shall be no commitment to a large problem of nuclear fission power until it has been demonstrated beyond reasonable doubt that a method exists to ensure the safe containment of long-lived, highly radioactive wastes for an indefinite future. (*Nuclear Power and the Environment*, p. 131)

The U.S. General Accounting Office also found that continued deployment of nuclear power may not proceed without solving "back end" fuel cycle problems:

> The unsolved problem of radioactive waste disposal threatens the future of nuclear power in the United States. Nuclear critics, the public, business leaders, and government officials concur that a solution to the disposal problem is critical to the continued growth of nuclear energy. (GAO, cover page i)

And the point was repeated before the Assembly Committee by William Rowe of EPA:

> If a safe, ultimate disposal method is not found quite soon, expanded or even continued nuclear energy from the fission process would be very difficult to support.

---

*Sections 25524.1 (a)(2) and 25524.2(b), Cal. Pub. Res. Code, maintains the suspension of nuclear plant certification after the Commission has reported affirmative findings until the findings have been reviewed by the Legislature and not rejected.

We believe that the answer to this question can be put to rest; however, this must be done before substantially greater commitments are made. Cited in *Assembly Report*, p. 21.)

Thus, the proposal of a pause for an evaluation of the nuclear option is not unique to California. Several other states have now passed or are considering legislation regarding problems in the nuclear fuel cycle; seven states passed laws in 1977 prohibiting nuclear waste disposal without legislative permission. Governor Carey of New York has announced that state's intention not to site any new nuclear plant until the waste disposal problem is solved. California's pause comes during what appears to be an economically-induced lull in the reactor market, as utilities themselves reassess the economics of nuclear power while the industry on the backlog of orders accumulated in the "boom" days of the early 1970s.

During the reassessment pause, the legislation charges the Energy Commission with the responsibility to review and evaluate the proposed solutions to nuclear fuel cycle problems. The Commission has approached that responsibility through several avenues:

1. An extensive series of informational hearings, with testimony from the public, government, industry, and the academic world.
2. Participation in the GESMO proceeding, before the NRC, on the use of recycle fuel in LWRs and in the Table S-3 proceeding on the environmental impacts of reprocessing and waste disposal.
3. Contractor studies on technical aspects of the nuclear fuel cycle.
4. Information-gathering trips to various national laboratories and other centers of activity concerned with fuel cycle technologies.

5. Extensive staff research and investigation.

In carrying out its investigation the Commission has adopted the skeptical approach embodied in the legislation.

The statutes require the Commission to address several questions in order to make the necessary findings:

1. What is a nuclear powerplant requiring the reprocessing of fuel rods?
2. What is a nuclear fuel rod reprocessing plant?
3. Does a technology exist for the construction and operation of a reprocessing plant?
4. What is an approval by an authorized agency of the U.S. in this case?
5. Has a reprocessing plant been approved by the U.S. through its authorized agency?
6. Will facilities with adequate capacity to store spent fuel be in actual operation at the time storage is needed to provide continuous onsite full core reserve storage capacity?
7. What is high-level waste?
8. What is a permanent and terminal method for disposal of nuclear waste?
9. Does the technology for disposal of wastes exist and has it been developed and demonstrated?
10. What is the authorized agency for approval of this technology?
11. In what form is the approval expressed?
12. Has this technology been approved by the U.S. through its authorized agency?

The Commission's analysis of these questions, and the conclusions resulting from that analysis, are presented in the remainder of this report.

REFERENCES

Assembly Report

Assembly Committee on Resources, Land Use, and Energy, *Reassessment of Nuclear Energy in California: A Policy Analysis of Proposition 15 and its Alternatives,* California Legislature, May 10, 1976.

Nuclear Power and the Environment

Royal Commission on Environmental Pollution, *Sixth Report: Nuclear Power and the Environment*, London, A.M. Stationery Office, September 1976.

SECTION 2.0: NUCLEAR FUEL REPROCESSING

2.1 *Summary*

When the Assembly began its examination of nuclear issues in 1975, reprocessing was assumed to be a necessary step in completing the nuclear fuel cycle.* However, no reprocessing plant was operating at the time and the possibility that spent fuel would continue to accumulate at reactor sites with no available means for reprocessing or disposal of the fuel led to the enactment of P.R.C. 25524.1.

The first part of the bill sets a test to be passed before the Energy Commission is allowed to certify any new nuclear plant "requiring the reprocessing of fuel rods." That test is that the Commission must first find:

> . . . that the United States through its authorized agency has identified and approved, and there exists a technology for the construction and operation of, nuclear fuel rod reprocessing plants. (P.R.C. 25524.1 (a))

Our investigation in response to this mandate has taken three approaches: Section 2.2 examines the question of a nuclear plant "requiring the reprocessing of fuel rods;" Section 2.3 provides an assessment of the status of reprocessing technology; and Section 2.4 examines federal approval of reprocessing.

Our general conclusions are summarized here, and the supporting analysis is found in the sections indicated.

---

*Reprocessing is a mechanical and chemical means of processing spent fuel discharged from light water reactors to recover reusable fuel materials (uranium and plutonium) for recycle. Reprocessing serves three basic functions: (1) the uranium and plutonium in the fuel are chemically separated from fission product wastes, (2) uranium and plutonium are separated from each other and converted to a form suitable for shipment and refabrication into new fuel rods, and (3) the fission wastes are converted to a solid form suitable for disposal.

Nuclear Powerplants "Requiring" Reprocessing (Section 2.2)

At the time the nuclear bills were passed (June 1976), reprocessing was viewed as the only alternative available to "unclog" the nuclear fuel cycle and prevent the shutdown of reactors due to full spent fuel pools (Section 2.2.6). This was confirmed by federal acceptance of the inevitability of reprocessing. However, since that time, the following circumstances have led to a reconsideration of reprocessing:

Proliferation Concern: Renewed concern over the spread of nuclear weapons emerged as a major factor in U.S. nuclear policy, resulting in an abrupt shift in federal programs. Instead of actively supporting the development of reprocessing capability, the government is now searching for other means of managing spent fuel without spreading the technology to produce nuclear weapons materials (Section 2.2.3).

Uncertainty of Economic Benefits: The economic and resource conservation benefits of plutonium have been challenged by analyses performed for the Commission and by others. It now appears that the economics of reprocessing are questionable at best and may very well be unfavorable. The decline in the number of reactors expected to go on line has eased pressure on uranium resources and lessened the strength of resource-conservation arguments (Section 2.2.4.1).

Waste Management: Reprocessing is not a necessary step in the final disposal of nuclear wastes. Although detailed comparisons of the disposal of reprocessing wastes vs. spent fuel have yet to be performed, there does not seem to be any clear incentive to choose one form over the other for waste disposal reasons (Section 2.2.4.2).

Breeder Introduction: With the deferral of breeder commercialization the need to gain reprocessing ex-

perience and build a plutonium stockpile for breeder introduction is no longer compelling (Section 2.2.4.3).

Although light water reactors do not require reprocessing to continue operation, interpreting the bill in this way should render the statute meaningless and imply that the Legislature did not realize the import of their actions. We do not base our findings on this interpretation (Section 2.2.5).

In summary, the Commission finds that light water reactors do not require reprocessing at this time, and the provisions of P.R.C. Section 25524.1 (a) do not now apply to them (Section 2.2.6). However, since this conclusion could be altered by future events the Commission is presenting for completeness its analysis of reprocessing technology as if those provisions did apply. The Commission has also determined that if future reactors are allowed to operate in a once-through (no recycle) mode, prospective nuclear powerplant operators will be required to show evidence of a firmly-committed uranium supply sufficient to fuel the proposed reactor for its design lifetime.

Reprocessing Technology Assessment (Section 2.3)

The Commission is required to make findings on the existence of a technology for the *construction* and *operation* of *commercial reprocessing plants*. Findings on the existence of a technology for commercial plant operation require stricter standards than for mere existence of the technology, since a commercially operable technology must be licensable and must perform reliably and routinely within regulatory limits. An assessment of the technology for operation of a commercial plant therefore involves the following basic questions related to reprocessing technology:

1. *Existence of the Technology:* Do the major components of the technology exist, i.e., has sufficient testing been performed to establish that the tech-

nology can achieve its intended function consistently without prohibitive disadvantages?

2. *Existence of the Technology for Plant Operation:* Can the separate components of the technology operate reliably and routinely as an integrated system within prescribed regulatory constraints? Can the technology meet criteria required for licensing, and thus be allowed to operate?

Issues related to each of these questions are summarized below and discussed in detail in Section 2.3 of the report.

Definition of a Reprocessing Plant (Section 2.3.2)

At the core of a commercial reprocessing plant is the separations facility, where spent fuel assemblies discharged from light water reactors are treated mechanically (chopped into small sections) and chemically (fuel is dissolved in acid and processed) to separate the usable plutonium and uranium from the fission product wastes. However, according to federal regulations a reprocessing plant must also include high-level waste solidification and product conversion steps in addition to the separations facility. Therefore, a commercial reprocessing plant includes facilities for: (1) separating uranium and plutonium from fission products, (2) converting plutonium solutions to a solid form, (3) converting uranium to a shippable solid or gas, (4) converting high-level wastes to a solid suitable for disposal, and (5) controlling certain radioactive off-gas releases (applicable for fuel discharged from LWRs after 1983). The status of the technology for each of these major components of a fuel reprocessing plant is discussed in Section 2.3.

Existence of the Technology (Section 2.3.1)

An essentially complete Purex-based solvent extraction technology exists for producing separate streams of uranium, plutonium and high-level wastes. Developed in the

U.S. military program for weapons production, it has had extensive worldwide testing and operating experience, primarily in military operations. Major changes and additions to the basic Purex process are required to adapt it for commercial LWR fuels and to meet federal regulations for commercial operation. Although many of these modifications involve new processes and equipment that are not as fully developed as the core Purex system, the Commission finds that each of the component technologies for reprocessing has been developed at least to the level that we know it exists at a bench, engineering or pilot plant scale.

Existence of the Technology for Plant Operation (Section 2.3.2)

The existence of a technology for operation of commercial reprocessing plants is a function of both its "technical operability" and its "licensability." Component technologies must be able to operate reliably and routinely as an integrated system within limits established by regulatory standards. However, a complete commercial reprocessing plant meeting all current federal requirements has never operated. Moreover, plants proposed for commercial operation involve new designs and components which have not been used extensively for this application. For some portions of the plant, regulatory criteria and standards against which the technology must be assessed have not been set, resulting in uncertainty regarding the technology that may be required for complete plant operation. In addition, certain portions of a reprocessing plant have not yet received a complete NRC review to determine whether the design, processes and safety considerations are technically sound. Not only has this review, necessary to fully "check out" the technology, not been completed, proceedings for the review have been terminated.

Section 2.3.2 reviews some of these technical uncertainties and gaps in the information required to establish the existence of a complete technology for operation of a commercial plant. They can be summarized as follows:

1. There has not been a demonstration of the safe, economic and reliable operation of a complete reprocessing plant.
2. Large-scale plant experience for major parts of a commercial reprocessing facility is either lacking or insufficient to establish long-term performance reliability and safety.
3. The integration of these processes into a full-scale commercial facility has not been demonstrated. Significant scale-up problems, particularly in waste solidification, will require major equipment and facility development and thorough testing.
4. Certain criteria (e.g., safeguards, waste solidification) which the technology will be required to meet have not been established. Additional technical work may be required to meet new safeguards and non-proliferation criteria.
5. A comprehensive safety and environmental analysis for a complete reprocessing technology has not been completed.
6. The technology for commercial waste solidification is not ready for plant application except on a testing and demonstration basis. Proof of this testing is a major requirement in closing the nuclear fuel cycle.
7. The safety, safeguarding and licensability of spent fuel reprocessing plant requires demonstration.

Further, the implementation of Purex-based reprocessing technology has been postponed indefinitely due to the connection between plutonium recycle and nuclear weapons proliferation. The modifications or new technologies which

might be required because of this concern are for the most part in early developmental stages.

In summary, the Commission concludes that a complete technology for commercial *operation* of a reprocessing plant will not be established until certain reviews (e.g., safety, environmental standards, safeguards, proliferation) of the technology have been completed, criteria set, and required testing performed.

Approval of Reprocessing Plants (Section 2.4)

P.R.C. Section 25524.1 (a) conditions CERCDC certification of nuclear fuel rod reprocessing plants on positive findings regarding the federal approval of nuclear fuel rod reprocessing plants. The Commission concludes that the United States has not "identified and approved nuclear fuel rod reprocessing plants." This conclusion is based on:

1. the December 27, 1977 order by NRC to terminate the proceedings on the generic environmental impact analysis of plutonium recycle (GESMO) and to deny AGNS and Exxon license applications for reprocessing plants.
2. President Carter's April 7, 1977 announcement to indefinitely defer reprocessing.
3. the October 4, 1977 White House letter to the NRC setting forth the President's position that GESMO should be terminated and interim licenses for fuel cycle facilities denied.
4. AEC/NRC's failure to issue a full-term operating license for a complete operating plant.
5. the lack of a complete NEPA review (environmental and safety analysis) of reprocessing technology, as required prior to plant approval.

The U.S. Supreme Court has indicated that no facility is considered approved by the AEC/NRC until it has re-

ceived both a construction permit and *an operating license*. Of the four commercial plants in existence or planned in the U.S. for reprocessing spent fuel, none have been issued full-term operating licenses. Issue of a provisional license to the NFS plant in 1966 does not constitute final NRC approval of a reprocessing plant since:

1. The NFS plant includes only a portion of a reprocessing plant as currently defined.
2. The license was issued prior to the development of significant federal standards affecting facility licensing.
3. There is uncertainty whether the plant even when modified could meet federal requirements.

In summary, because of NRC's specific disapproval of the implementation of reprocessing technology, termination of all reprocessing plant licensing proceedings, the failure to complete a generic environmental impact statement, and the lack of prior licensing of a complete reprocessing facility, the Commission concludes that neither Purex-reprocessing technology nor commercial reprocessing plants have been approved by the U.S. through its authorized agency.

2.2 *REPROCESSING REQUIREMENT*

2.2.1 *Summary*

The need for or desirability of reprocessing has become one of the major issues in the nuclear fuel cycle over the last year and a half. In this respect the California nuclear safety statutes have placed the state squarely in the middle of a national and international debate. Section 25524.2(a) applies only to nuclear plants which require reprocessing. We conclude that currently there is no compelling reason to reprocess nuclear fuel and several good reasons not to do so. Accordingly, the provisions of this section of the

statute do not apply to the conventional light water reactor power plants proposed for the state.

The primary source of concern over reprocessing today is the potential link to proliferation—the spread of nuclear weapons capability to nations outside of today's nuclear club. Part 2.2.3 of this section outlines the sources of this concern and describes briefly the resulting change in federal policy.

Part 2.2.4 examines the assumptions underlying the previous federal policy of encouraging the development of a reprocessing capability and shows that these assumptions either were mistaken or have been superseded by later events. Thus reprocessing does not appear to be required on economic grounds, as a waste management method, or as a stepping stone to the breeder reactor.

Uncertainties in uranium supplies for reactors on a "once-through" cycle will be addressed by the Commission on a case-by-case basis. The Commission will require a potential reactor operator to provide convincing evidence (e.g., firm contract options) that adequate uranium will be available to fuel the planned reactor during its expected lifetime.

The position statement submitted by the utilities and industry asserted that "Light-water reactors do not require reprocessing for any technical, economic or other reason." The implicit conclusion is that P.R.C. 25524.1(a) therefore does not apply to this type of reactor.

While the Commission, as documented in Part 2.2.5, agrees that reprocessing is not required in this purely *technical* sense, we do not believe that this is the sense which the Legislature intended. Clues in the bills themselves, legislative history as presented in contemporary documents, and the records of evidence presented in hearings all show

that the legislators were aware that reprocessing was not technically required for LWR operation.

The question of a "requirement for reprocessing" is enmeshed in the changing assumptions underlying former federal policies for the nuclear fuel cycle. Part 2.2.6 describes federal policy at the time the nuclear bills were under consideration. The Legislature was properly concerned over the reliability implications of a failure to establish reprocessing plants. Those plants were perceived as the only option federal policy allowed to permit a smooth flow of material through the fuel cycle, and it was in that sense that reprocessing was thought to be "required."

Because that policy has since been reversed, the U.S. Department of Energy is now pursuing options other than reprocessing which, if successful, will allow the clearing of spent fuel pools and continued reliable operation. Therefore reprocessing is no longer "required" in the sense intended by the Legislature and P.R.C. 22524.1(a) does not apply to light water reactor power plants proposed for California. Because of the possibility of a rapid change in circumstances surrounding reprocessing policies, however, we present (in Sections 2.3 and 2.4) our analysis for technology status and approval for reprocessing.

2.2.2 *Introduction*

The reprocessing stage of the fuel cycle would serve three basic functions:

1. The fission products which accumulate in the fuel during reactor operation and impair the efficiency of the reactor are chemically separated from the uranium and plutonium.
2. The usable elements in the fuel — uranium (which is still slightly enriched in U-235) and plutonium (created during the reactor's operation) are sepa-

rated and converted to a form suitable for shipment and refabrication into new fuel rods.

3. The fission wastes isolated in the first step are converted to a form suitable for disposal, generally by calcining and incorporation into glass.

After reprocessing the useful materials would be refabricated into new fuel (called mixed-oxide or MOX fuel because it is composed of both uranium and plutonium oxides). The MOX fuel would be recycled to light water reactors, thus "closing" the fuel cycle and gaining additional energy from the original uranium.

The plutonium isolated during reprocessing can also be used in two other ways. In an advanced type of reactor called the liquid metal fast breeder reactor (LMFBR) the plutonium can be used as fuel and at the same time produce more new plutonium than is consumed. The result is a net gain in fissile fuel; thus the "breeder" reactor. The other potential use for plutonium is the production of nuclear weapons. This is a major reason for the controversy over reprocessing—the possibility that the spread of reprocessing technology will make atomic weapons easier to obtain.

2.2.3 *The Proliferation Concern and the Shift in Federal Policy*

At the time the California nuclear bills were debated and enacted reprocessing and recycle of plutonium were seen as a necessary part of the U.S. "nuclear plan." That acceptance has since been abandoned. National policy has turned against reprocessing because of a growing concern—perhaps provoked by the Indian nuclear explosion of 1974—that encouraging the spread of reprocessing technology could lead to the proliferation of nuclear weapons states.

Since the introduction of the Eisenhower "Atoms for Peace" proposals of the mid-1950's a central tenet of U.S.

policy has been that the peaceful uses of nuclear energy could be spread to non-weapons states without endangering the delicate balance between the nuclear powers. International agreements such as the Non-proliferation Treaty, surveillance by the IAEA, and bilateral safeguards agreements were thought to provide sufficient safeguards to prevent more nations from joining the "nuclear weapons club." It is this basic premise of U.S. nuclear foreign policy which has now been challenged—a challenge leading directly to the dramatic turnaround in Federal policy toward reprocessing since October 1976.*

The most difficult step in fashioning a nuclear weapon may be accumulating sufficient fissionable material. (Wohlstetter, pp. 1-2) Producing weapons material requires either an intricate and expensive facility to separate U-235 from U-238 or a reactor to produce plutonium from U-238 and a chemical separations plant to extract the plutonium. Construction of these facilities was considered to be beyond the capabilities of sub-national groups and most nations. The closed LWR cycle and the LMFBR system would involve large quantities of plutonium in circulation among the various facilities: reactors, reprocessing plants and fuel fabrication plants. Widespread access to this material might remove a major barrier to the construction of nuclear weapons.

By making purified plutonium readily available, these plutonium fuel cycles could cut down or even eliminate the lead time required for a state to build or use a nuclear weapon. Present weapons-control institutions depend on a

---

*A comprehensive study of reprocessing policies from a non-proliferation standpoint is *Non-Proliferation and Nuclear Waste Management*, by Rochlin, Schiff, *et al.*, Contract AC6AC725 for ACDA (February 1977).

"timely warning" period of perhaps several months to allow measures against a potential new weapons state to be taken. (Scheinman Tr. 6/13/77,* pp. 7-9, 53-54) But with a readily available plutonium stockpile and previously thought-out component construction program a nation could have a usable bomb in a matter of days or hours. Indeed, there has been some speculation that Israel possesses just this kind of short-notice nuclear capacity. (OTA, p. 11)

The U.S. nuclear power strategy — LWRs, reprocessing and LMFBRS — has been accepted in nearly every nation which has established a commitment to nuclear power. Earlier, several other reactor systems had been under development which would have differed greatly from the LWR/LMFBR approach: gas-cooled reactors, heavy-water reactors with no recycling, and advanced "near breeder" versions of both. One by one, nations became convinced of the superiority of the U.S. approach and began to plan for their own reprocessing facilities and LMFBRs, although some, notably Canada, have no definite plans for breeders. Reprocessing plants are operating or under construction in England, France, Belgium (as a European consortium), Italy and Japan. The U.S. proliferation concern emerged late, and now the challenge is to convince other nations to reexamine their nuclear programs.

Of course, there are other views on the proliferation risk posed by plutonium reprocessing technology. Some doubt whether making nuclear weapon material an article of commerce is a fundamental change in the world situation. They reason that other more easily procured means for massive destruction already exist. (Chester, Tr. 6/17/77, p. 170)

---

*California Energy Resources Conservation and Development Commission Hearings on Nuclear Fuel Reprocessing and High-Level Waste Management.

Others argue that, if a nation desired a nuclear weapon, there is such widespread nuclear expertise that little could be done to prevent its acquisition.* The problem of proliferation in this view is not one of access to technology — that technology is already accessible — but one of political and international diplomatic dimensions.

Others believe that even without widespread reprocessing technology, nuclear power is incompatible with restraining proliferation of nuclear weapons. They believe nuclear power itself provides too tempting an opportunity for acquisition of the means for constructing nuclear weapons, and that almost any peaceful applications of nuclear energy can both facilitate and shield from detection the development of nuclear weapons.**

Each side claims that support for their view is to be found in the recent release by Oak Ridge National Laboratory of a "quick and dirty" reprocessing plant design claimed to be simple, cheap, and easily concealed. Taking only six months to build, the design is supposed to be capable of producing sufficient plutonium metal for 10 nuclear bombs each month starting with spent LWR fuel. (Nucl. Week, 10/27/77, pp. 1-2) Nuclear critics say such a plant is indicative of the inherent problems of nuclear power since

---

*This argument is presented by C. Starr and E. Zebroski, in "Nuclear Power and Weapons Proliferation," presented at the American Power Conference, April 18-20, 1977; reprinted in Tr. 6/13/77, p. 364-397.

**_Commission Hearings_, June 17, 1977, p. 59 (testimony of Amory Lovins). Lovins quoted the Acheson-Lilienthal Report of March 1946, which stated:

> The development of atomic energy for peaceful purposes and the development of atomic energy for bombs are in much of their course interchangeable and interdependent. From this it follows that although nations may agree not to use in bombs the atomic energy developed within their borders, the only assurance that a conversion to destructive purposes would not be made would be the pledged word and the good faith of the nation itself.

any nation with a nuclear plant could presumably produce weapons quickly and easily. Opponents of the Administration policy claim the design shows that "timely warning" is impossible even with a ban on commercial reprocessing. (Nuc'. Week, 11/3/77, p. 11)

The New Policy: A Reexamination of the Alternatives to Reprocessing

These problems were reflected in federal policy in a statement by then President Ford on October 28, 1976. In that statement, President Ford signalled a major shift from the previous encouragement of reprocessing:

> I have decided that the United States should no longer regard reprocessing of used nuclear fuel to produce plutonium as a necessary and inevitable step in the nuclear fuel cycle, and that we should pursue reprocessing and recycling in the future only if they are found to be consistent with our international objectives. (Statement of October 28, 1976, p. 4)

Thus the new federal policy would no longer regard reprocessing as "necessary and inevitable." This policy was reaffirmed and strengthened by President Carter in his April 7, 1977, statement. Not only was reprocessing not inevitable, but he proposed to:

> . . . defer indefinitely the commercial reprocessing and recycling of the plutonium produced in the U.S. nuclear power programs. (Statement of April 7, 1977, p. 1)

The President further proposed to defer the commercial introduction of the breeder and to investigate alternatives to plutonium recycle both independently and in cooperation with other nations. (Statement of April 7, 1977, p. 1-2)

This policy has provoked widespread controversy. The deferral of the breeder in particular continues to draw heavy fire in Congress. The reprocessing deferral remains as a key

element of U.S. policy, however, and has been reinforced by the recent NRC decision to terminate the GESMO proceeding and the AGNS and Exxon reprocessing plant license applications. (NRC Order)

2.2.4 *The Changing Assumptions About Reprocessing*

Previous to the policy reversal based on these national security considerations, the federal government encouraged the development of a commercial reprocessing capability for three basic reasons: for a perceived economic benefit, as an assumed step in waste management, and as a useful step in the development of a breeder reactor economy. The last of these reasons has been superseded by the decision to defer commercialization of the plutonium breeder. The first two, after independent analysis by the Commission and other groups, no longer appear compelling.

2.2.4.1 *Economics and Resource Conservation*

A primary motivation for reprocessing and recycle of LWR spent fuel has been a predicted cost savings. Analyses performed by the government (ERDA-76/121, p. 2, GESMO, pp. 5-54 to 5-59, SRL, pp. 24-27) and industry (AGNS, *Nuclear Fuel Cycle Closure Alternatives*, pp. 51-53) found that plutonium recycle paid for itself by replacing increasingly expensive natural uranium and by lowering waste disposal costs. The benefits reported in these analyses vary over a wide range depending on the time period considered, projected growth rates for nuclear capacity, and the values assumed for such key variables as reprocessing charges, uranium prices, and relative disposal charges for reprocessing wastes and spent fuel. (Taylor, p. D-1)

Using these assumptions analysts found that reprocessing and recycle would lead to a small decrease, perhaps 10-15%, in nuclear fuel cycle costs. Since these costs in turn

are a small portion of total generating costs, the effect of plutonium recycle on nuclear electricity costs would be small — a decrease of two percent or less in terms of cost pre [*sic*] kilowatt-hour though absolute benefits would be large. (Ford/MITRE, p. 322-327)

Some recent analyses challenge this conventional wisdom, however. According to the Ford/MITRE Study Group (Ford/MITRE, p. 323) and an analysis performed for the California Energy Commission by Pan Heuristics (Taylor, D-1) the economics of plutonium recycle are uncertain at best and are very likely unfavorable. This uncertainty stems from changing circumstances which affect some of the crucial values assumed in previous cost-benefit studies: the future price of uranium, the rising cost of reprocessing, and the relative disposal costs of spent fuel versus solidified reprocessing wastes.

2.2.4.1.1 *Uranium Resources*

The adequacy of uranium resources and the projected price of uranium are hotly-debated issues today. Projections of nuclear generating capacity have fallen drastically in the last few years: as recently as 1974, the AEC predicted that between 850 and 1,400 gigawatts (one gigawatt is equivalent to one 1000-MW reactor) of nuclear capacity might be required by the year 2000. (WASH-1139 (74), cited in ERDA-1) Since then expected nuclear additions by 2000 have dropped to 300-400 gigawatts. (Nucl. Week, 11/3/77) This drop in reactor numbers has greatly eased the pressure on uranium resources, and a consensus seems to have been reached that those resources will prove adequate to fuel LWRs to be built until after the turn of the century. (GESMO, p. X-2, Ford/MITRE, pp. 84-90)

The questionable resource conservation benefit to reprocessing was also pointed out in the study performed for

ACDA. In a rapidly expanding nuclear economy, even a "resource stretch" of 25 percent would result in only about one additional year of reactor construction for a given resource base (ACDA, pp. 61-67) That study also found that increased efficiency in uranium use could be gained more economically by altering enrichment policies rather than by reprocessing. (ACDA, pp. 212-219)

2.2.4.1.2 *Reprocessing Costs*

As projections of nuclear capacity have gone down, cost estimates for reprocessing plants have gone up. A recent estimate gives the capital cost of a 1500 MT/yr plant (the size of the AGNS Barnwell plant) as $1.2 billion.* The estimates used by the APS study group for a remotely-maintained plant are even higher — over $1.3 billion — though semi-direct maintenance lowers the cost to $.76 billion. (APS, p. IV-48) Estimates made as recently as 1976, however, gave capital costs of $500-$600 million. (Taylor, p. D-26)

These rapidly-increasing capital costs and the method of financing reprocessing plants have an important effect on the cost of reprocessing spent fuel.** Because of these effects calculated reprocessing charges are highly variable. The Pan Heuristics estimates prepared for the Commission are $317/kg (with no allowance made for the risk that costs or operability fail to meet design expectations) and $450/kg (with a moderate risk allowance). These are significantly higher than other estimates and reflect the substantial risks taken by potential investors in a reprocessing plant. (Taylor,

---

*Cited in Taylor, pp. D-20, D-24; the high estimate is from the Savannah River study and is in agreement with the Pan Heuristics study performed for the Commission.

**The effect of choice of financing is treated in Taylor, pp. D-35 to D-42, and in the APS study, pp. IV-34 to IV-40.

pp. D-43 to D-45) These risks, and the correspondingly higher costs for reprocessing, illustrate the uncertainties in reprocessing cost estimates and the corresponding unfavorable economics.

2.2.4.1.3 *Waste Disposal Costs*

Because until recently government policy has been so uniformly opposed to direct disposal of spent fuel, no detailed estimates of spent fuel disposal costs are available. Costs of reprocessing waste disposal are also uncertain — the ERDA and GESMO studies actually rely on estimates for the now-suspended interim RSSF concept to develop costs of final storage. (Taylor, p. D-48)

This uncertainty is crucial, since previous studies have assumed large savings for disposal of reprocessing wastes as opposed to spent fuel. These savings lead to a significant portion of the total benefits for reprocessing found in the GESMO and ERDA studies. (Taylor, p. D-49)

The extent to which costs differ will depend on the constraints placed on design of a repository and on handling techniques. Repository design criteria are still unclear but there appears to be no basis for the substantial savings predicted by previous studies for reprocessing waste disposal. (Taylor, pp. D-49 to D-53)

Because of these important uncertainties in the basic assumptions underlying calculations of reprocessing economics, we conclude that there is no compelling economic motivation for reprocessing and recycle. Although this conclusion runs counter to government and industry analyses of the past, it is in agreement with recent assessments by Pan Heuristics (Taylor, D-1), the International Technology Project (ACDA, pp. 212-222), the Ford/MITRE Study Group (Ford/MITRE, pp. 322-327) and by the President. (Statement of April 7, 1977, p. 1)

2.2.4.2 *Waste Management*

The impact of reprocessing on waste management is contested. Although it was seldom made explicit, the assumption in previous federal policy appears to have been that reprocessing was a necessary step in the final disposal of fission wastes. (ACDA, p. 56) Until recently the direct disposal of spent fuel was rarely even considered: according to NRC, "The disposal of unreprocessed spent fuel has received less attention and therefore should be considered in a less-developed technological state than the geologic storage of HLW (high-level waste)" (NUREG-0116, p. 2-12) and ". . . detailed analysis of the technology of spent-fuel disposal are not to be found in the literature" (NUREG-0116, p. 4-113). As NRC Commissioner Gilinsky put it: ". . . industry and government planning for disposal of radioactive wastes has been predicated on the assumption that reprocessing would go forward" (Tr. 1/31/77, p. 13).

When U.S. proposals made the once-through fuel cycle a real possibility the usefulness of reprocessing as a waste management tool became a contested issue. Some of the differences in handling solidified reprocessing wastes and spent fuel as waste are detailed in Sections 3.4.3 and 3.4.2.3 of this report. The principal issues of contention seem to be cost and feasibility.

2.2.4.2.1 *Cost*

GESMO, ERDA-76/121, and the AGNS "Nuclear Fuel Cycle Closure Alternatives" study all estimate waste management costs (per unit fuel processed) to be higher for direct disposal of spent fuel. Witnesses at the Commission's hearings disagreed over the significance of this difference for overall fuel cycle costs, though it appears to be minor compared to other factors. (Tr. 6/16/77, pp. 239-244) The GESMO analysis, though it found higher costs for direct

disposal of spent fuel (GESMO Vol. 4, p. VIII-44 to VIII-45), concluded "there is no clear preference for a specific fuel cycle on the basis of waste management considerations."

Potential foreign reprocessors such as British Nuclear Fuels, Ltd. dispute this conclusion. A cost assessment performed by BNFL to support its case for expanding the Windscale plant concludes that costs for disposal of spent fuel will be much higher than the cost of reprocessing the fuel and disposing of the vitrified wastes. (BNFL, pp. 4-5)

2.2.4.2.2 *Feasibility*

Another argument for reprocessing has been that it simplifies and improves the waste disposal process, i.e., that reprocessing is a necessary waste management technique independent of any economic or resource-conserving benefits. This concept is advanced principally today in countries outside the U.S., and the point was made clearly by Dr. Manfred Hagen of the West German Federal Ministry of Research and Technology. (Tr. 4/19/77, pp. 18-20, 25-26) In a sense it appears to form the basis of the BNFL case, too, since their cost assessment shows a net *cost* from reprocessing rather than a positive benefit. (BNFL, p. 4) This implies that reprocessing is actually the best of the waste management alternatives rather than an economic operation in itself.

However, a closer analysis shows that waste management may in fact be complicated by reprocessing. Because of process losses and increased production of plutonium and transplutonics, final disposal of plutonium in a recycle system may be reduced by as little as one-fifth to one-tenth, rather than the 1/200 claimed by reprocessing advocates.

(ACDA, pp. 71-76) And instead of decreasing the total volume of waste requiring disposal, reprocessing may increase that volume by a factor of two. (ACDA, p. 74)

2.2.4.3 *Introduction of the Breeder*

One of the goals of the development of a successful LWR reprocessing industry was to pave the way for the breeder reactor by providing the technological basis and start-up plutonium for a system of plutonium breeders. (ACDA, pp. 77-80)

This connection was made clearly in 1971 by Glenn Seaborg, at that time Chairman of the AEC, in a statement before Congress:

> Since the fast breeder uses the uranium cycle it is complementary to the light water reactor which also employs this cycle. We see the transition from light water reactors to the fact breeders as an orderly process in which the plutonium produced by the light water reactors helps supply the fast breeder reactors until they have operated long enough to provide a completely self-sufficient fuel system. (June 1971 Hearing, p. 108)

To build up this initial supply of plutonium would, of course, require the development of a reprocessing capability.

This rationale for LWR reprocessing was repeated during the Assembly hearings by A. E. Schubert, president of AGNS:

> The technology and experience to be gained through operation of the LWR reprocessing plant is essential to the breeder reactor fuel cycle. This is partly why implementation of these final steps in the fuel cycle can and must move ahead. . . . (Assembly Comm. Hearings, 11/4/75, pp. 93-94)

The importance of LWR reprocessing to breeder reactors was emphasized again in the October 1, 1976, AIF policy statement:

> . . . . the need to bring the breeder reactor to commercial status by the 1990's makes the need for reprocessing compelling.
>
> . . . [R]eprocessing is essential to the long-term viability of nuclear power; it conserves energy fuels and *provides the foundation for longer-term growth in energy needs through breeder or advanced converter fuel cycles*. (emphasis added)

W. P. Bebbington, former technical supervisor of the Savannah River Plant, pointed to the need for reprocessing experience prior to breeder introduction:

> The fuel cycle needs to be closed so that the technologies for reactor-fuel fabrication and for reprocessing can remain in step with reactor technology and meet their mutual requirements. *It is particularly desirable that the commercial reprocessors have experienced staffs and demonstrated processes before they are called on to take up the more demanding task of reprocessing plutonium fuels from breeder reactors* and other advanced systems with high burnup rates and perhaps shorter cooling periods. (W. P. Bebbington, "The Reprocessing of Nuclear Fuels," Scientific American, December 1976, p. 39)

And most recently the APS Study Group on Nuclear Fuel Cycles and Waste Management referred to the need for a plutonium inventory for breeders provided by LWR reprocessing:

> Therefore, ERDA's schedule of breeder introduction would have required the existence of industrial-scale LWR reprocessing before the 1990's. (APS, p. VIII-22)

Thus, the impending introduction of a system of breeder reactors was an important incentive for the development of LWR reprocessing capability. Reprocessing of LWR fuel would provide valuable experience and a starting inventory of plutonium for the introduction of the LMFBR.

Along with the new reprocessing policy, however, the Administration has deferred the previous goal of early breeder introduction. This aspect of the President's program has encountered opposition in Congress; the struggle over funding of the Clinch River breeder demonstration is not over. Nevertheless it is clear that the LWR-reprocessing-LMFBR connection has been cut from federal plans, at least for now. Therefore, the early introduction of a plutonium breeder can no longer be regarded as one of the factors requiring reprocessing of LWR fuel.

2.2.5 *Reprocessing not required in a strictly technical sense.*

As pointed out both in the Position Statement submitted by the California electric utilities and industry (Position Statement, p. III-4) and by Thomas Cochran of NRDC (Tr. 2/2/77, pp. 294-295), only breeder reactors require reprocessing in a technical sense, and then only to breed.

Current U.S. reactors do not require recycled fuel. As long as sufficient fissile material is supplied, they can continue to operate regardless of the source of that material. This is true of all commercially-available reactors in the world: light water reactors, heavy water reactors, or gas-cooled reactors.

However, the statute would be rendered meaningless by this interpretation, since light water reactors (the only reactors whose licensing was contemplated in California at the time of the enactment of this section) do not *technically* require the reprocessing of fuel rods for continued operation.

Two other bases exist for rejecting the narrow interpretation that this section applies only to nuclear reactors which technically require the reprocessing of fuel rods. First, the canons of statutory construction require that terms in a statute be interpreted so as not to render the statute meaningless. *Ivens v. Simon* (1963) 212 Cal. App. 2d 177, 27 Cal. Rptr. 801, 804-805; California Civil Code Section 3541. Since light water reactors were the only reactors contemplated at the time the statute was passed, to exclude those very reactors from the ambit of the statute's requirements would be to render the statute meaningless.

Second, the Legislature itself provided a key to interpreting the types of reactors to which this section would apply. The statute indicates that it is applicable to "nuclear fission thermal powerplants requiring the reprocessing of fuel rods, . . . *excepting any having vested rights as defined in this section.*" (Emphasis added) In subsection (c) the Legislature exempts certain powerplants which would otherwise be subject to the provisions of the statute. Included in the exemption section are the following light water reactors: Diablo Canyon 1 and 2 and San Onofre 2 and 3. Therefore, the Legislature must have intended for the section to apply to light water reactors except for those specifically exempted and consequently for the modifying phrase "requiring the reprocessing of fuel rods" to indicate a requirement other than a technical one.

2.2.6 *Reprocessing and Reliable LWR Operation.*

When the bill was introduced, reprocessing was regarded as a necessary step in clearing accumulating spent fuel from storage at reactor sites. This accumulation could jeopardize continued operation of the reactors by preventing the loading of fresh fuel. During the investigative hearings in the Assembly preceding introduction of the bill, the lack of re-

processing capacity for removing and processing spent fuel was linked to potential reactor shutdowns. The shutdown of at least six reactors due to a loss of reload capacity was forecast before the Committee by the President of AGNS (Assembly Comm. Hearings, 11/5/77, p. 176-178). ERDA had released the first in its series of reports on spent fuel storage capacity (*LWR Spent Fuel Disposition Capabilities 1975-1984*, ERDA-25). That study presented an alarming prospect: Without new reprocessing facilities, up to 37 reactors might be forced to shut down in 1980 because of a lack of storage space. Even with expansion in on-site basins and expansion of the G. E. Morris operation, the report projected fourteen reactors unable to make scheduled discharges (ERDA-25, p. 6). The situation looked still bleaker after 1980: projections showed 60 to 84 reactors losing reload discharge capability in 1984. (ERDA-25, p. 8)

These projections underlined the perceived urgency of building a reprocessing capability. That this was the intent of the Legislature is evident from the May 10, 1976, *Reassessment Report*:

> To prevent shutdowns, ERDA noted that additional storage capacity must be ready by 1977 and more capacity equal to the amount of fuel discharged is needed every year thereafter *until the reprocessing plants begin to operate*. (p. 23-24)

And in a discussion of the nuclear bills, the report's authors noted:

> The bills are designed to provide a pause in the deployment of nuclear powerplants until . . . certain stipulated problems [adequate reprocessing capacity and permanent waste disposal adequacy] which may 'clog' the nuclear fuel cycle are resolved. (p. 154)

While temporary spent fuel storage could alleviate the shutdown problem, reprocessing was at the time the clearly

favored option for economic, resource conservation, and policy reasons.

That reprocessing was indeed an intended goal of federal nuclear policy can be seen in the various regulatory and development actions taken by the AEC and its successors from the 1950's through early 1977.

- The NRC staff indicated its position in GESMO (*G*eneric *E*nvironmental *S*tatement on the Use of Recycle Plutonium in *M*ixed *O*xide Fuel in Light Water Cooled Reactors) that reprocessing and recycle were reasonable and desirable parts of the LWR fuel cycle.
- As pointed out in the utilities' Position Statement, the federal government had encouraged the development of private reprocessing facilities since the 1950's. From that time until the October 28, 1976, statement by President Ford federal policy was predicated on the eventual completion of the nuclear fuel cycle with the establishment of a private reprocessing industry.*
- The former policy is acknowledged in more recent documents. For example, ERDA 76-43 uses the reprocessing/recycle case as its "reference fuel cycle." NUREG-0116 also mentions the old assumption: "It's been assumed in the past that the uranium and plutonium of spent fuel would be recovered and recycled . . ." (p. 4-113). ERDA-76/121 states, "The high residual energy content of spent fuel has led to the implicit assumption that reprocessing and recycling is a necessity for the conservation of resources. And President Ford's October 1976 statement di-

---

*The history of the federal government's attempts to encourage the development of a commercial reprocessing capability is summarized in the position statement submitted by the California Utilities. (Utilities' Position Statement, pp. III-3 to III-9)

> rected ERDA to "change ERDA policies and programs *which heretofore have been based on the assumption that reprocessing would proceed.*" (October 28, 1976, Statement, p. 6)

The nuclear industry was also firmly convinced of the need for reprocessing, and responded to government encouragement with the three ventures into commercial reprocessing undertaken to date: Nuclear Fuel Services' plant in West Valley, New York; G.E.'s Midwest Fuel Reprocessing Plant in Morris, Illinois; and the Allied-General Nuclear Services plant in Barnwell, South Carolina. The industry's commitment to reprocessing was restated clearly in the October 1, 1976, statement by the Atomic Industrial Forum Review Group:

> . . . [R]eprocessing is essential to the long-term viability of nuclear power; it conserves energy fuels and provides the foundation for the longer-term growth in energy needs through breeder or advanced converted fuel cycles. Proposed government assistance and regulatory policies that do not recognize this essentiality or attempt to avoid reprocessing by indefinite storage or disposal of spent fuel are unrealistic.

This was the sense in which reprocessing was thought to be "required" at the time the bills were passed: in order to ensure the continued operation of nuclear plants a way had to be found to prevent reactor shutdowns due to a lack of spent fuel storage capacity. The only means available, according to the policy spokesmen for ERDA, NRC and the industry, was to quickly provide enough reprocessing plant capacity to allow the spent fuel to be shipped away.

2.2.7 *Conclusion*

The necessity for reprocessing LWR fuel has been a much-debated issue in the interval since the nuclear bills were passed in mid-1976. At that time reprocessing was

viewed as the only alternative available to "unclog" the nuclear fuel cycle and allow utilities to empty their spent fuel pools. This was confirmed by federal acceptance of the inevitability of reprocessing.

Since that time, the following circumstances have led to the reconsideration of reprocessing:

- The emergence of proliferation concern as a major factor in U.S. nuclear policy has led to an abrupt shift in federal programs. Instead of actively supporting the development of reprocessing capability, the government is now promoting other means of managing spent fuel.
- The economic and resource conservation benefits of plutonium have been challenged by analyses performed for the Commission and by others. It now appears that the economics of reprocessing are questionable at best and may very well be unfavorable. The decline in the number of reactors expected to go on line has eased pressure on uranium resources and lessened the force of resource-conservation arguments. By requiring that prospective reactor operators show a firmly-committed uranium supply for the lifetime of a proposed plant, the Commission will assure adequate fissionable fuel supplies without reprocessing.
- Reprocessing no longer appears to be a necessary step in the final disposal of nuclear wastes. Although detailed comparisons of the disposal of reprocessing waste vs. spent fuel have not been performed, there does not seem to be any clear incentive to choose one form over the other.
- With the deferral of breeder commercialization, the need to gain reprocessing experience and build a plutonium stockpile for breeder introduction is no longer compelling.

Therefore, the Commission finds that light water reactors do not require reprocessing at this time, and the provisions of PRC 25524.1(a) do not now apply to them. However, this conclusion could be changed in the future.

Therefore, the Commission is presenting for completeness its analysis of reprocessing technology as if those provisions did apply.

2.3 *Reprocessing Technology Assessment*

2.3.1 *Summary*

Section 25524.1(a) requires findings on the existence of a technology for the construction and *operation* of commercial reprocessing *plants*, not simply the existence of reprocessing technology. In fact, much of the confusion with respect to the statutes over the status of reprocessing technology stems from a failure to make the distinction between mere "existence" and "existence for operation of plants." The latter term is a more stringent criterion since it implies workability of an integrated system meeting all regulatory constraints.

An essentially complete technology exists for Purex-based reprocessing of spent fuels to produce separate streams of uranium, and high-level wastes. However, a commercial reprocessing plant, according to federal regulations and common usage, includes more than the separations facility. It is the entire plant complex including high-level waste solidification and plutonium conversion steps. The status of the technology for each of these major steps must therefore be examined.

A commercial reprocessing plant based on the Purex process and meeting all current federal requirements has never been operated. Moreover, the latest plant designs involve operations and utilize components that have not been tested continuously at a commercial scale. In addition, regulatory

criteria and standards have not been set for some portions of the plant, resulting in uncertainty regarding which technologies may be required for plant operation.

The NRC performs a "chief engineering function" to carry out an extensive review of a facility to determine the technical acceptability of the design, the process, and the safety features. Certain portions of a commercial reprocessing plant have not yet received this review. Not only has the review necessary to fully "check out" the technology not been completed, proceedings for the review have been terminated.

Furthermore, the Purex-based reprocessing technology may be rejected by the federal government or modified in order to reduce the possibility of diverting nuclear materials for weapons purposes. The processes and equipment which might be required to reduce such safeguards problems are for the most part in early developmental stages.

It appears that most components of the technology have been developed at least to the level that we know it exists at a bench, engineering or pilot-plant scale. However, the costs, operability and reliability of these components when integrated in a full-scale commercial facility are currently unknown. Therefore, until the NRC reviews are complete, criteria are set, and the routine operability of new equipment verified, a complete operable technology for reprocessing commercial fuels will not have been tested or confirmed.

2.3.2 *"Existence of a Technology" vs. "Existence of a Technology for Plant Operation"*

We have examined reprocessing technology both from the standpoint of mere "existence of a technology" and "existence of a technology for operation of commercial plants." The latter analysis was mandated by Section 25524.1 which requires findings by the Commission that

"there exists a technology for the construction and operation of nuclear fuel rod reprocessing plants." Appendix A discusses the definitions for these terms adopted by the Commission and makes the following conclusions:

- A technology "exists" if there is a technique or method on which enough information is available from testing at a bench, pilot, or semi-works scale under conditions approximating those under which it must perform in actual use to establish convincingly that the technology can achieve its intended purpose consistently without prohibitive offsetting disadvantages.
- A technology exists for the construction and operation of a plant if the technology has been comprehensively tested under expected operating conditions, including start-up, input variations, output fluctuations, process interruptions, imperfect maintenance, malfunction of related systems and unusual environmental conditions at a reasonable scale (either from actual full-scale operation or a pilot or semi-works scale plant) to establish convincingly that the technology can operate consistently, reliably, routinely, and within prescribed occupational and public safety, emissions, and safeguards limits over extended periods of time.

The major distinction between these two terms is that existence of a technology for plant operation is determined by whether it has been shown to be reliable, routinely operable and to work within regulatory limits. "Existence of a technology" is a lesser criterion and is determined when sufficient testing has been completed to establish that a technique can achieve its intended purpose consistently without prohibitive disadvantages. We will first consider

the existence of the major components of a commercial reprocessing technology and then examine whether each component exists for plant operation.

2.3.3 *Definition of a Reprocessing Plant*

A "reprocessing plant" includes facilities for the following functions:

- Separating uranium and plutonium from fission products;
- Converting plutonium solutions to a solid form;
- Converting uranium solutions to a shippable solid (UO_2, UO_3, U_3O_8) or gas (UF_6);
- Converting liquid high-level waste to a solid suitable for receipt and emplacement at a federal repository; and
- Trapping offgasses (from fuel discharged after 1983).

The Position Statement of the Utilities defined "reprocessing" as a means of treating spent fuel to produce liquid streams of uranium, plutonium and high-level wastes (Utilities Position Statement, Section IV, pp. III-9-10). However, current federal regulations require that the high-level wastes from a reprocessing plant be solidified within five years of production (10 CFR 50, Appendix F) and that plutonium solutions be converted to a solid form prior to shipment (10 CFR 71, paragraph 42). (Plutonium solidification regulations will take effect in 1978.) Therefore, a reprocessing plant must include a plutonium solidification facility (Smith, p. 25) and cannot be licensed to operate unless facilities for waste solidification are included (Bernero, Tr. 3/8/77, pp. 211-212). In addition, recent requirements adopted by the Environmental Protection Agency for gaseous releases in the uranium fuel cycle will require control of Kr-85 and I-129 during reprocessing of fuel discharged after 1983 (40 CFR 190 (1977)). Control require-

ments may also be adopted for C-14 and tritium (H-3) (EPA 1976, p. 73). Therefore, a plant cannot reprocess fuel discharged after January 1, 1983 until these federal requirements can also be met. (NRC has some flexibility in imposing these standards and may not require Kr-85 control for the AGNS plant at Barnwell; Bernero, Tr. 3/8/77, p. 225. However, 40 CFR 190.11 seems to imply Barnwell will be required to eventually control Kr-85.)

In addition to federal requirements, general usage in the industry and federal agencies tends to support including waste solidification and U/Pu conversion facilities as part off a reprocessing plant. Bernero (Nuclear Regulatory Commission) testified that "reprocessing, both in application and in concept is the whole facility, . . . with shippable products." (Tr. 3/8/77, pp. 274-275.) The NRC has also defined a reprocessing plant, both in a generic analysis of reprocessing and waste disposal (NUREG-0116, p. 4-4) and in proceedings for licensing the Allied General Nuclear Services plant at Barnwell, South Carolina (NUREG-0082, p. III-1), as including facilities for plutonium conversion and waste solidification. Industry has included facilities for waste solidification and plutonium conversion in their reprocessing plant designs, for example, the plants proposed by Allied General Nuclear Services (AGNS), Exxon, and NFS (proposed modifications for the West Valley Plant) (Newman, Tr. 3/8/77, p. 85; Newman, Tr. 3/8/77, pp. 323-324; Rodger, Tr. 3/7/77, p. 45; APS, p. IV-32; APS, p. IV-32). In addition, studies by EPA (EPA 1974, p. 15), the Department of Energy (ERDA 77-75, p. 2.32) and the American Physical Society (APS, p. VI-9) include waste solidification, uranium conversion, plutonium conversion and chemical separation in flow diagrams showing Purex reprocessing. Therefore, consistent with federal regulations,

statements from NRC, EPA, DOE, industry and technical reviews, our analysis of the technology for operation of a commercial reprocessing plant will include these facilities.

2.3.4 *Existence of Reprocessing Technology*

2.3.4.1 *Separations*

2.3.4.1.1 *Purex Solvent Extraction*

The heart of any reprocessing plant is the process to recover usable fuel from spent fuel discharged from a nuclear reactor by separating it from fission products and other wastes. Many years of developmental and production experience have been accumulated with chemical solvent extraction separations techniques from the weapons program both here and abroad. The most successful of these techniques is the Purex (*P*lutonium-*U*ranium *E*xtraction) process.

In the Purex process, spent uranium fuel is dissolved in hot nitric acid as a feed material. The resulting acid solution containing the uranium, plutonium, other transuranics and fission products is contacted with tributyl phosphate dissolved in an organic solvent. The uranium and plutonium are preferentially extracted from the nitric acid solution by the organic solvent. Most of the fission product wastes are left behind in the nitric acid. The separation of uranium from plutonium occurs by the selective transfer of plutonium (through a reduction in the oxidation state of plutonium by electrolytic or chemical means) into nitric acid while the uranium remains in the solvent solution. The partitioned plutonium and uranium are then purified by further solvent extractions. The organic solvent solution and nitric acid are both recycled in the process. The products of Purex solvent extraction are separate liquid streams of uranyl nitrate, plutonium nitrate, and high-level waste.

The Purex process was developed and used by the U.S. Government during the early 1950's for weapons production and became the preferred approach for commercial reprocessing throughout the world. (Oldham, p. 94) Several plants based on the Purex technology have been built and operated both in the United States and abroad including plants at Hanford, Washington (built 1955-58, 9-10 metric tons of uranium per day, MTU/D); Savannah River, South Carolina (1952-54, 14 MTU/D); Idaho Falls, Idaho (about 1955, 2.5 MT/yr); Windscale, England (1964, 2000 MT/yr); Marcoule, France (1200 MT/yr, since 1958); La Hague, France (approximately 1200 MT/yr, 1967); and several pilot facilities including a multipurpose plant at Mol, Belgium (60 MT/yr). In 1963, Purex was used in the first privately-owned reprocessing plant, the Nuclear Fuel Services (NFS) plant (360 MT/yr, 1 MT/day) at West Valley, New York, operating from 1966-1972 (Rodger Tr. 3/7/77, p. 24). Since then, two other privately-owned plants were built: the General Electric Plant at Morris, Illinois (300 MT/yr) using a substantially modified Purex system and the AGNS plant (1500 MT/yr) at Barnwell, South Carolina. (Only a portion of the plant has been constructed.) A third privately-owned Purex plant (1500 MT/yr) has now been proposed by Exxon for construction near Oak Ridge, Tennessee.

Utility witness Walton Rodger estimated 10,000 man-years of effort have gone into the development and application of the Purex process (Tr. 3/7/77, p. 307). Based on the extensive research and operating experience summarized above, the Purex technology exists for defense production of plutonium and for the separation component of a commercial facility.

The Purex separations process developed for military plutonium production has been modified and supplemented with additional processes and equipment necessary for com-

mercial operations. Therefore, the technology for these modifications is not as mature as the core solvent extraction system.

Operations of typical defense and commercial plants are shown in Tables 1 and 2. Major changes were required primarily due to differences in:

1. Fuel composition (military fuel is uranium metal; commercial fuel is uranium oxide).
2. Fuel configuration (commercial fuel assemblies are structurally more complex and have zirconium or stainless steel cladding, whereas military fuels are clad in aluminum).
3. Higher fuel exposure in LWR fuel (military fuels are irradiated at a relatively low burn-up, whereas commercial fuels have higher burn-ups).
4. Commercial fuels have higher levels of plutonium and long-lived fission products.

Table 1. Commercial U.S. Plants

Comparison Item	NFS	MFRP	AGNS	EXXON
Location	West Valley, N.Y.	Morris, Ill.	Barnwell, S.C.	Oak Ridge, Tenn.
Design Capacity	1 MTU/day	1 MTU/day	5 MTU/day	5 MTU/day
Head-End	Chop-Leach	Chop-Leach	Chop-Leach	Chop-Leach
Fuel Chopping	Mech. shear, end fittings removed with saw	Mech. shear, pins removed and sheared	Mech. shear entire fuel element	?
Dissolution Material	Nitric acid	Nitric acid	Nitric acid	Nitric acid
Dissolution Technique	Batch	Semicontinuous	Semicontinuous	Semicontinuous
Dissolution Equipment	Baskets in Dissolvers	Vibratory Leacher Tray	Baskets in Dissolver	?
HA Contactor	Pulsed Column	Pulsed Column	Centrifugal Contactor	Pulsed Column
Partitioning Technique	Solvent extraction with chem. valence adjustment	Ion exchange	Solvent extraction & electrolytic valence adjustment	Solvent extraction & chemical valence adjustment
Interim Waste Storage	Basic solution Carbon steel tank	Calc. solid	Acid solution in stainless steel tank	Acid solid/surge tank only (prompt solidification) 23 × 10,000 gal.
Feed Clarification	None	None	Centrifuge	?
Maintenance Design	Remote for mechanical chem. process cells; contact otherwise		Semi-direct "minimum maintenance"	Semi-direct

Sources: APS, p. IV-22, IV-43
Tr. 3/7/77, p. 632
Tr. 3/7/77, p. 633

Table 2. "Typical" Defense Purex Plants*

Location	Hanford, Idaho, Savannah River
Capacity	Approx. 10 MTU/day (Hanford)
Head-End	Chemical decladding of fuel HF for zirc. HNO_3 and electrolysis for stainless steel NaOH for aluminum cladding
Fuel Dissolution	HNO_3
Dissolution Technique	Batch
Dissolution Equipment	Tanks (total dissolution)
HA Contactor	Pulsed column or Mixer settlers (centrifugal contactor at SRL)
Partitioning Technique	Solvent extraction and chemical valence adjustment
Interim Waste Storage	Neutralized sol. (acid wastes at Idaho)
Feed Clarification	Centrifuge (SRP)**
Maintenance Design	Remote (ICPP direct)

*Richards letter to Chapman.
**Culler Tr. 3/8/77, p. 34.

In addition to differences in fuel types, there are major changes in the separation process required for commercial reprocessing including:

1. A different head-end treatment to prepare fuel for dissolution.
2. Clarification of the dissolved fuel solution to prevent the introduction of solids to downstream equipment.
3. Use of new equipment to reduce radiation damage to the solvent and enhance waste management by reducing chemical additions to the process.
4. Storage of liquid wastes as acids.

Most of these changes are relatively untested in a commercial production mode although testing on a smaller scale has been done. The total experience with processing commercial oxide fuels has been limited to about 222 metric tons (MT) at NFS, 100 MT at Windscale, 13 MT at La Hague, and 120 MT at Mol; for a total of 455 MT (Wymer Tr. 10/20/77, p. 216a) between 1966 and 1977. In comparison, AGNS proposes to process 1500 MT of oxide fuel each year.

The G.E. Morris facility made substantial innovations over the conventional defense-style Purex system for the purpose of improving and simplifying reprocessing and enhancing waste management. The plant was declared inoperable by G.E. (NRC Appraisal, G.E. Morris Facility) during pre-operational check-out. Subsequent plant designs (AGNS, Exxon) have chosen not to break as much new ground as G.E. Morris and have not diverged as significantly from the defense plant basic design.

2.3.4.1.2 *Head-End Processes*

In the defense plants, cladding hulls enclosing the fuel are removed chemically, and the released fuel dissolved in nitric acid. However, due to slow dissolution rates, high fuel losses during chemical decladding of zircaloy-clad commercial fuels and the troublesome waste product resulting from chemical decladding, a different technique for handling oxide fuels was thought necessary (Franklin 1975, p. 6). Mechanical processes were developed—the British devised a die extrusion system for aluminum-clad and Magnox fuels. The United States developed at Oak Ridge National Laboratory (ORNL) a mechanical shear to chop spent fuel into short sections so that the uranium could be dissolved from the cladding in nitric acid, leaving cylindrical

pieces of cladding behind—a process labelled "chop-leach."

The chop-leach system was first installed and operated at the NFS plant in 1966. NFS experienced numerous mechanical failures with the shear, necessitating frequent repairs (Resnikoff Tr. 3/7/77, pp. 633-634). These repairs involved high occupational exposures. NFS had hoped the shear would be remotely maintainable but instead contact maintenance was required (Resnikoff Tr. 3/7/77, pp. 633). NFS was in the process of redesigning its shear when in 1976 they decided not to reopen their plant (which had been shut down for repairs in 1972). The decision was reported to have been due to the high costs of modification required to bring the plant up to new NRC standards combined with the plant's limited capacity and limited remaining useful life (GAO 1977, Enclosure, p. 18).

After NFS, shears were installed at Windscale, La Hague, and Barnwell (Culler Tr. 3/7/77, p. 106 and 391). (A very small shear was also installed at the German WAK pilot plant (Schuller, *et al.*, p. 2).

Additional shear development work has been conducted at ORNL. An ORNL progress report (ORNL/TM-5660, p. 6-12 for the period July 1 to September 30, 1976) listed problems in the head-end processing of spent LWR fuels which included:

1. There is no extensive, sustained experience in this country on which to base an extrapolation of shear operation to demonstrate commercial rates of up to 10 metric tons of spent fuel per day.
2. No complete characterization exists of a shear feeder, blade shapes and wear, chute and stacking characteristics, particle and dust production, or the adaptation or adjustments required for ductile or brittle fuels.

3. The pyrophoricity of zircaloy and uranium metal fines presents operational problems in the mechanical head-end. The report recommended that existing and proposed shear-leach processes should be examined closely to identify potential fire hazards; e.g., friction heating between blades. (However, previous experience in shearing zirconium hulls has indicated a low probability of a major fire with this material; EPA, 1974, p. 65).
4. A fault-tree analysis of a mechanical head-end facility containing a shear has not been made. Such an analysis was considered essential in the design and operation of new head-ends since a series of events, including a fire, "could trigger an unexpected phenomenon that would endanger the operators, facility and biological surroundings."
5. Additional work is required in demonstrating remote operability and maintenance of a new hot cell shear system at high throughput rates
6. Research is also necessary to develop methods for material accountability (some plutonium is lost with the cladding), evaluate in-cell fire control methods, and analyze criticality and radiation hazards.

The report also stated that programs to discover alternatives to the shear-leach process should be encouraged and *pursued intensively* (ORNL/TM-5660, p. 7).

Based on the scope of what ORNL considers "unresolved questions" concerning the shear, additional research clearly is necessary to improve the performance and safety of the current shear design or to develop a different approach.

These problems do not necessarily mean that there is no technology for chopping spent commercial fuel; however, AGNS has taken the following steps to avoid the problems NFS encountered:

1. Many of NFS' problems in the head-end were due to a separate *saw* for removing end fittings on fuel bundles prior to shearing (Rodger Tr., 3/7/77, p. 155). AGNS intends to shear the entire bundle, eliminating the saw (Rodger Tr. 3/7/77, p. 155).
2. In the Barnwell plant design the chopped fuel falls directly into the dissolver baskets, (Newman Tr., 3/8/77, p. 409) eliminating a chute which plugged at NFS (Resnikoff Tr., 3/7/77, p. 635).
3. The Barnwell shear was built by the same French company which supplied a similar shear to the La Hague plant. The shear was based in large part on the improved NFS design and has currently undergone cold testing at the Barnwell plant (Schneider Tr. 3/7/77, p. 171).
4. The problems with the shear arise from mechanical failures induced by the high forces and wear inherent in a device used to slice through thick bundles of metal tubes. The AGNS approach has been: (a) to ensure the shear can be repaired and maintained remotely (it has been completely dismantled and reassembled remotely at Barnwell, Schneider Tr., 3/7/77, p. 7); and (b) to have on hand a *duplicate* shear should the first fail and need to be replaced.

Experience for the European shears has been "limited," but "apparently the shears have worked as expected (ORNL/TM-5660, p. 7)." However, the NRC staff has stated: "Present shear systems although operable are very limited in the spent fuel assemblies they can handle, the mechanical operations they can perform, and in their maintenance by remote means." (NRC Responses, p. 1-40.)

In spite of recognized limitations with respect to the reliability of the shear, the Commission concludes that there has been sufficient testing to conclude a shear technology meets the criteria for existence.

2.3.4.1.3 *Solids Accumulation*

Another difference between military and commercial fuels is that the latter are exposed longer in a reactor. As a consequence of this longer exposure, LWR fuels have higher levels of plutonium (Schneider Tr. 3/7/77, p. 105), long-lived fission products (Orth Tr. 3/7/77, p. 129), and fission product solids (Culler Tr. 3/7/77, p. 391). In addition, zircaloy cladding fragments and fines may end up in the dissolver. The above characteristics create solids accumulation problems which need to be addressed in the design of a commercial fuel separations facility. These problems include:

- Zircaloy fines in the dissolver could accumulate and create an explosion hazard unless periodically removed (DPST-LWR-77-1-1, p. 38).
- Insoluble fission products in the feed constitute about 0.2 percent by weight of irradiated LWR fuel (NRC Responses, p. 1-44; DPST-LW-76-2-4, p. 65). This residue, which is extremely radioactive and has high heat generating properties (ORNL/TM-5760, pp. 14-15), could plug equipment (DPST-LWR-77-1-1, p. 26).
- A crystalline zirconium-molybdenum precipitate has appeared in process solutions (NRC Responses, p. 1-45).
- Accumulation of an "inextractable" plutonium species (ORNL-TM-5547, p. 23) in the dissolver could result in potential criticality problems (DPST-LWR-77-1-1, p. 38) or recovery losses.

Concern about solids relates both to the effect of solids on plant operability (plugging of equipment and heat generation) and potential losses of material associated with the solids (ORNL/TM-5447, p. 7).

However, these problems have been under study, and measures to offset them have for the most part been devised (see DPST-76-2-3, pp. 60-66; DPST-LWR-76-2-4; ORNL/TM-5447 pp. 19-25; DPST-LWR-77-1-1, pp. 37-41). Studies have shown that chemical treatment and centrifugation of the nitric acid solution will be necessary to provide clarified feed for solvent extraction. The zirconium-molybdate precipitate apparently can be avoided by keeping process temperatures below 60°C and acidity about 2 *M*, which according to the NRC staff are "reasonable constraints" for reprocessing (NRC Responses, p. 1-45). In addition, the "inextractable" plutonium has not been routinely present in dissolved UO_2 fuel (Hyder Tr. 10/19/77, p. 95; Vondra Tr. 10/20/77, p. 186).

The fines and the insoluble fission products in the dissolved fuel can be removed by centrifugation (NRC Responses, p. 1-45). Feed solution clarification by centrifugation is a standard operation in the Savannah River Plant (Culler Tr. 3/7/77, p. 34; NRC Responses, p. 1-50). The AGNS plant has installed a remotable batch centrifuge to clarify the feed solution (BNWL-2186, p. 33) and has sloped horizontal fuel lines with a minimum of bends to prevent the buildup of solids and plugging of downstream lines (Newman Tr. 3/8/77, p. 65). Although AGNS has taken these precautions, feed clarification systems have not accumulated extensive operating experience in commercial scale facilities (McMurray, p. 3) and feed line plugging may occur (NRC Responses, p. 1-48). Clarification was not used on the dissolver solutions at the NFS plant, eventually resulting in plugging of one of the main lines of the plant (Browne, p. 1164).

Additional testing, particularly of the remotability of the centrifuge, and process verification under actual operating conditions is necessary to confirm the use of the equipment.

However, the Commission concludes that prior experience and development of fuel clarification techniques are adequate to meet the criteria for existence.

2.3.4.1.4 *Use of New Equipment to Reduce Solvent Damage and Simplify Waste Handling*

The AGNS plant incorporates two relatively new pieces of equipment for two functions important to the Purex process. These functions are:

1. The mixing (contacting) of the dissolved fuel with the organic solvent to extract uranium and plutonium into the solvent.
2. Changing the oxidation state of plutonium to allow its separation from uranium.

The dominant equipment used for contacting the dissolved fuel with the solvent has been pulse columns and mixer settlers (Franklin 1975, p. 6), both used since the 1950's. The time of exposure of the organic solvent to radiation during solvent extraction is important since the solvent is damaged by radiation. A report by a study group of the American Physical Society stated that the contact time of the radionuclides with the solvent must be minimized to reduce solvent degradation due to radiolysis (APS, p. IV-13). Radiation damage to the solvent was considered to result in several potential problems:

1. Impairing separation between uranium and plutonium; and
2. Formation of "red oil" which, if formed, is hazardous since it is highly explosive and detonates readily (APS, p. IV-12, 13).

The study concluded that centrifugal contactors are available to reduce the exposure time of the solvent to radiation, and that mixer-settlers and pulse columns "may not be

suitable . . . for high burn-up fuels because of relatively long contact times with TBP." (APS, pp. IV-11 to 13)

AGNS felt the damage due to radiation exposure could be minimized by using a French centrifugal contactor (Robatel) (Newman Tr. 3/8/77, p. 91). However, questions have been raised about the desirability of the Robatel centrifugal contactor. General Atomic feels it has a low tolerance for solids, a tendency to overheat and a relatively high holdup time (1.6 minutes for all eight stages) (BNWL 2186, pt. 2, p. 11). Others have criticized centrifugal contactors because they require more maintenance than pulse columns (Costello and Levins, p. 83). In addition, studies comparing centrifugal contactors with pulse columns have not established any significant difference in damage to the TBP solvent (both were low), questioning whether there are significant benefits to the use of centrifugal contactors (BNWL 2186, pt. 2, p. 35).

The Savannah River Plant has used a centrifugal contactor of its own design since October 1966 and has accumulated around 1,000 days of operation with 27 mechanical failures (BNWL 2186, pt. 2., p. 14). Another Robatel contactor has been installed at the La Hague plant and operated briefly in January 1977 on 15 MT of irradiated LWR fuel feed in a test run (Savage, p. 124; NRC Responses, p. 1-49). Although the test was considered a success (Newman, Tr. 3/8/77, p. 92), use over prolonged periods was not demonstrated.

Since there are other contactor technologies available (APS, p. IV-10), the Purex separations facility in general does not depend on the success of the centrifugal contactor. The pulse column, used at NFS and included in the Exxon plant design, has had extensive service with good performance. Therefore, a contactor technology exists for solvent extraction.

A similar situation exists for the partitioning electropulse column installed in the Barnwell plant. The standard technology for partitioning plutonium from uranium is by valence adjustment using a chemical reductant, such as ferrous sulfamate. AGNS has adopted a different approach in plant design by using electrolytic reduction and eliminating a troublesome process waste stream (Resnikoff tr., 3/8/77, p. 110). This "electropulse" column has not been run previously at a large scale (DPST-75-448, p. B-5), but AGNS has performed cold tests on it and is confident of its operability. Because there is a well-established backup technology, namely chemical valence adjustment, we conclude that a partitioning technology exists.

2.3.4.1.5 *Acid Waste Interim Storage*

In the first cycle extraction of the Purex process the uranium and plutonium are extracted from the nitric acid by the TBP solvent. Over 99.9 percent of the fission products remain behind in the nitric acid solution, and this constitutes the liquid high-level wastes produced during reprocessing. In the defense plants (except for the Idaho plant which stores acid wastes) and at NFS, the acid wastes were neutralized and the solution stored in carbon steel tanks. However, as required by federal regulations (10 CFR 50, Appendix F), the design objective for commercial reprocessing plants is to solidify liquid high-level wastes within five years of production. AGNS indicated one of the major reasons they planned to store their liquid wastes in an acid form was because they anticipated eventual solidification (Newman Tr. 3/8/77, p. 71-72).

By allowing an additional five years decay period, subsequent solidification is somewhat more manageable due to reduced radiation levels. Nevertheless, the G.E. Morris and proposed Exxon plants were designed for prompt so-

lidification of the waste stream with no five-year storage. The AGNS design, however, did plan to store the wastes in stainless steel tanks after concentration to reduce the storage volume. There has been considerable design experience in stainless steel tank storage, summarized in Table 3.

At least for the United States experience, there have been no leaks detected from the tanks. A program was initiated in early 1976 at INEL to evaluate the behavior of acid wastes during concentration and storage with regard to solids production, fouling tendencies, and corrosion of tank and evaporator materials (see, e.g., ICP-1101 and ICP-1110). Examination of corrosion coupons left at various positions in the Idaho tanks indicated the maximum corrosion rate was 0.1 mil/year (2.5 um/year) for four coupons left in the first cycle wastes for 8.3 years (Hoffman, p. 38). However, the Idaho waste heat load is much less than that anticipated for commercial high-level liquid wastes. For example, INEL acid waste heat load is less than 0.1 watt/liter whereas the design heat load for storage tanks at the Barnwell reprocessing plant is 9.5 watts/liter (ERDA-76-43, p. 19.14).

Table 3. Summary of Stainless Steel Tank Design

Facility	Maximum Tank Size M^3	Heat Load	Acid Conc.	Containment	Cooling	Agitation	Operating Experience Years
Barnwell Nuclear Fuel Plant	1135	9.5	10*M*[a]	Double	Yes	Yes	0
Idaho National Eng. Lab	1135	0.1	4-5*M*[b]	Double	Yes	No	20
Windscale (England)	150	10.0	4-7*M*[c]	Triple	Yes	Yes	23
Eurochemic (Belgium)	40	13.0	?	Double	Yes	Yes	9
La Hague & Marcoule (France)	90	8.0	?	Double	Yes	Yes	17

Source: DPST-LWR-76-1-1, p. 27, except as noted.
a. Inferred from ICP-1101, ICP-1110.
b. Hoffman, p. 34.
c. Clelland 1972, p. 3.

AGNS plans to minimize corrosion by keeping the wastes cooled to below 50°C. If the tanks should develop leaks, one spare tank is provided and the secondary containment is a fully lined concrete vault that will hold more than an entire tank of waste (NUREG-0116, p. 4-76).

Based on this experience and testing, the technology for acid waste storage in stainless steel tanks for a period of about five years exists.

2.3.4.2 *Uranium Conversion*

The Purex separations plant produces a liquid uranium stream in the form of uranyl nitrate. This product is converted to a solid (UO_2, UO_3) or a gas (UF_6) for reenrichment and use in fabricating new fuel rods. The processes for conversion of this recycled uranium are all similar to those used for uranium ore. The UF_6 plant at Barnwell is nearly identical to Allied-Chemical's Metropolis, Illinois plant using natural uranium ore (Schneider Tr. 3/7/77, p. 76). The major difference between uranium ore and recycled uranium is that the latter contains "small traces" of fission prducts and plutonium (*Ibid.*).

However, no LWR uranium has ever been recycled to reenrichment (Culler Tr. 3/7/77, p. 92; 10/20/77, p. 6). Modifications to cope with alpha impurities and short-lived uranium-237 are anticipated (McMurray, p. 6). Technology for removing alpha impurities from UF_6 prior to entry to enrichment has been recently developed (*Ibid.*).

Defense plants have used two conversion processes for uranyl solutions: (1) to produce the trioxide (UO_3); and (2) to produce uranium metal from recovered enriched uranium.

The Commission concludes that experience from extraction and conversion of uranium ore is readily applicable to commercial operations; therefore a uranium conversion technology exists for reprocessing.

2.3.4.3 *Plutonium Conversion*

The Purex solvent extraction process produces a purified plutonium nitrate liquid stream. However, a 1972 NRC regulation prohibits the commercial shipment of plutonium in liquid form (10 CFR 71, Paragraph 42). Therefore, reprocessing plants must include a process for converting plutonium nitrate to a solid (plutonium oxide) (DPST-75-448, p. 28).

The defense plants have been doing plutonium nitrate conversion for many years. DOE witness Floyd Culler testified, "Tens of thousands of kilograms of plutonium have been recovered, decontaminated from uranium fission products, converted to various product forms, fabricated and shipped safely." (3/7/77, p. 91.) Although large quantities of plutonium have been fabricated into weapons, there is little experience handling recycled plutonium from LWRs (DPST-75-448, p. B-17). Military experience has been primarily with the conversion of plutonium nitrate to a plutonium metal (DPST-75-448, p. 29) for use in weapons production (RFP-2552, p. 1). In contrast, commercial reprocessing plants would be designed to convert plutonium nitrate to plutonium oxide (DPST-75-448, p. 29).

Additional work is required to adapt the military processes for commercial plant operation, including the design of remotely operated, heavily shielded facilities with scale-up suitable for high commercial throughput rates.

The plutonium used to produce plutonium metal for weapons is low in isotopes ^{238}Pu, ^{240}Pu, and ^{241}Pu and emits less penetrating radiation than the plutonium produced in LWR's (DPST-75-448, p. B-17). The higher radiation due to the "isotopic plutonium mixture in the LWR plutonium will require much more stringent shielding and radiation protection requirements for the commercial efforts" than for

previous conversion processes (DPST-75-448, p. 84). Fuel production for the Fast Flux Test Facility has provided experience in processing plutonium containing large amounts of ^{240}Pu and ^{241}Pu, minimizing the additional research and development work required (DPST-75-517, p. 20).

There are eight licensed non-military plutonium conversion facilities in the United States, all using oxalate precipitation, denitration or other methods to convert plutonium nitrate to its oxide (Bernero Tr. 3/10/77, p. 181). They are, however, R & D type facilities, not production facilities (Bernero Tr. 3/10/77, p. 183).

Research is underway at Rocky Flats Plant, through the Savannah River Operations Office, to critically analyze and evaluate existing technology for converting plutonium oxide and to recommend equipment for this process (RFP-2590, p. 1). Processes considered for the study which have had at least pilot plant operating experience included:

1. Plutonium (III) oxalate precipitation and subsequent calcination, used by the Savannah River Plant and Los Alamos Scientific Laboratory.
2. Plutonium (IV) oxalate precipitation and subsequent calcination, used at Hanford.
3. Plutonium peroxide precipitation and subsequent calcination, used by the Rocky Flats Plant and Los Alamos Scientific Laboratory.
4. Fluid bed direct denitration, developed by Argonne National Laboratories.
5. Mechanical direct denitration, developed at Hanford. (This has been considered the simplest, most direct conversion method; LA-6721-PR, p. 2.)
6. Batch denitration, used in early denitration work.
7. Sol-Gel process, developed and used at Oak Ridge National Laboratory.

Criteria used in rating conversion technologies included prior operating experience, remotability (ease in adapting process to remote operation), maintenance, environment and safety, and compatibility of product with subsequent processing.

Based on operating experience alone, the plutonium (IV) oxalate and the peroxide precipitation processes received highest ratings. These have had extensive operating experience compared with limited production experience with plutonium in the batch direct denitration, fluid bed direct denitration and sol-gel processes (RFP-2590, p. 3). All processes are lacking in experience with remote maintenance. (No evidence could be found that any of the seven plutonium conversion process had operated completely by remote control (RFP-2590, p. 3).) LWR plutonium-nitrate-to-oxide conversion must be remotely controlled because of the radiation levels of the materials involved (RFP-2573, p. 5). Since remoting increases the difficulty of operation and increases the need for instrumentation (RFP-2573, p. 5), the process most easily remoted, the direct denitration process (RFP-2590, p. 3), was rated highest. The report speculated that all processes could possibly be operated by remote control if adequately designed (RFP-2590, p. 3). Maintenance was considered a serious problem because of the degree of remoting and amount of shielding required (RFP-2573, p. 5). The Sol-Gel process received a low environment and safety rating by the RFP study due to fire and explosive hazards.

The fluid bed direct denitration process received the highest overall rating in these preliminary studies (RFP-2590, p. 1); results indicated that direct denitration processes in general had a distinct advantage over the precipitation and Sol-Gel processes, and was the recommended process for commercial application (RFP-2590, p. 4). However, an-

other study at Los Alamos Scientific Laboratory noted several disadvantages with the direct denitration process (LA-6721-PR, p. 3):

1. Actual oxide production experience by this method is severely limited.
2. It is not presently known if the PuO_2 product would routinely meet fuel specifications.
3. Corrosion caused by nitric acid fumes could be extensive.

The report stated further that SRL has favored the Pu(III) oxalate process because of easy operation, filterability, tolerance to feed variations, low filtrate losses, and data on the calcined product (LA-6721-PR, p. 3). AGNS and NFS selected the Pu (IV) process because the operations are proven and data show that the plutonium oxide can meet product specifications. (The plutonium (IV) oxalate process has been used to provide oxide for fabrication of fuel rods) (RFP-2590, p. 4). The Los Alamos report concluded that more study will be necessary and that accountability, process safeguards, and additional data on the calcined product may require examination before either Pu(III) or Pu(IV) oxalate process is selected (LA-6721-PR, p. 4). LASL plans to construct an appropriate materials accounting system for the most promising process (LA-6721-PR, p. 2).

Apparently, much additional work on plutonium conversion is needed. However, because the Pu(III) and (IV) technologies are well established, even though some additional work is needed for remote operation, the Commission concludes a technology for conversion of recovered commercial plutonium nitrate to oxide exists.

2.3.4.4 *Waste Solidification*

Several approaches are being developed for meeting the federal regulation that commercial high-level liquid wastes be converted to a chemically, thermally, and radiolytically

stable dry solid within five years of their production (10 CFR 50, Appendix F). United States' efforts have focused primarily on two solidification technologies—fluidized bed calcination and spray calcination—and two glassification, or vitrification, technologies—in-can melters and continuous melters. The experience with these technologies is summarized in Table 4. In addition, similar techniques are being developed in Europe. While none of these technologies has ever processed actual commercial liquid wastes routinely, a history of extensive testing under both nonradioactive and radioactive conditions in at least pilot scale units exists.

Much of the early solidification work was carried out by Battelle Pacific Northwest Laboratories in the Waste Solidification Engineering Prototypes (WSEP) program initiated in 1966. The WSEP program ended in 1971 after a total of 33 demonstrations had been completed with pot, spray and phosphate glass solidification processes (BNWL-2092, p. 2). In these tests simulated commercial high-level wastes were converted to a solid at rates of approximately 1/7 the scale estimated for reprocessing plants (NRC Responses, p. 102).

Table 4. Summary of Waste Solidification Experience

Methods	*Scale of Previous Operation*	*Reference*
Spray Calciner	At PNL 13 radioactive "engineering scale" runs of about 50 hours each with simulated radioactive commercial waste at 1 MTU/day (about 1/7 of a typical reprocessing plant) and at 3 T/day (nonradioactive).	ERDA-76-43, p. 6.28 NRC-CERCDC, p. 1 102
		Kuhlman Tr., 3/24/7 p. 60-70
	Has operated non-radioactive at PNL (pilot scale) for more than 1,000 hours including a 20-day continuous run and has operated at full scale (5 MTU/day).	Platt letter, p. El-2
	Planned Testing	
	Full scale (5 MT/day) remotely operated, non-radioactive facility is under construction. Will process actual commercial HLLW before the end of 1978 at 0.8 T/day.	BNWL 2092, p.6 Kuhlman Tr., 3/24/77 p. 7
In-Can Melting	*Scale of Previous Operation*	
	Pilot plant (radioactive) operation at 7.5 kg glass/hr and (non-radioactive) at 29.5 kg glass/hr (equivalent to 3 MTU/day repro. plant).	ERDA-76-43, p. 6.38
	20 engineering scale canisters of in-can melted glass have been produced (of which two were under radioactive hot cell conditions)	McElroy Tr., 3/21/77 p. 617 and BNWL-5972, p. 4
	Pilot plant development is complete.	McElroy Tr., 3/21/77, p. 620
	Planned Testing	
	In conjunction with spray calciner, will be tested with commercial HLLW in 1978. Plan to produce two canisters of borosilicate glass from actual commercial HLW by end of 1978. Will be operated up to 1 MT/day.	McElroy Tr., 10/21/77 p. 90

Fluidized Bed Calciner	Since 1963, INEL has calcined over 10 million liters of military wastes at routine rates in the range of 400-500 liters/hr. (2-3 times rate required at a 5 MTU/day reprocessing plant).	ERDA-76-43, p. 6.17
	Planned Testing	
	Large-scale testing with commercial wastes before end of 1978.	
Continuous Ceramic Melter	Simulated AGNS high level and intermediate level wastes were solidified in a 10-day pilot scale run. About 7200 liters of feed were solidified.	ICP-1111, p. ii
	11 kg glass/hr with simulated HLLW and at 60 kg glass/hr with calcine.	ERDA-76-43, p. 6.38
	In 1975 an engineering prototype was held at 1,000-1, 300°C continuously for 11 months (5 MT of glass produced) in intermittent operations.	McElroy Tr. 3/21/77, p. 31
	PNL has produced 3 T glass/day (non-radioactive, simulated commercial and defense wastes); currently in operations at PNL.	Nuc. Week, 10/13/77, p. 3
	Planned Testing	
	Full-scale radioactive testing with commercial waste planned by 1980's. It is planned that by 1978 a full-scale system can be built with all remote features required for actual operation.	McElroy Tr., 3/21/77, p. 30

1. *Spray Calcination/In-Can Melter*

The most highly developed United States vitrification process is the combined spray calcination/in-can melter being developed at BNWL (McElroy Tr., 3/21/77, p. 616). A comprehensive Waste Fixation Program based on this process has been underway since 1972 at Battelle. Spray calcination consists of atomizing the liquid waste by a spray nozzle located at the top of a heated column (CONF-770102, p. 15). The waste is flash dried and calcined to a powder as it falls through the column, and accumulates in a container. The calciner can be directly coupled to an in-can melter by which glass forming frit is added to the calcine powder in a canister and is melted within the container. The molten glass containing the wastes is then cooled to solidify the glass and serves as the final storage container. The process has been installed and operated with nonradioactive materials at PNL both at a pilot scale (operated for over 1,000 hours, including a 20-day continuous run) and at full scale (5 MTU/day) (Platt letter, p. E1-2). As of October 1976, 20 engineering scale canisters of in-can melted glass have been produced (BNWL-SA-5972, p. 4). The pilot scale spray calciner/in-can melter system has been maintained remotely for over 10 years (NRC Responses, p. 1-105). The spray calciner is considered ready for plant design, and development of the in-can melter is essentially complete (BNWL-2092, p. 126). Additional work is being performed to test full-scale (5 MTU/day) nonradioactive equipment, to demonstrate nonradioactive facility mockup for equipment remote operation and maintenance, and produce (pilot scale) waste glass from actual commercial fuel HLLW (BNWL-2092, p. 6).

Hot cell facilities are presently being modified to provide for the processing of actual hot fuel elements from

a power reactor Purex-type flowsheet to provide fully authentic waste; this waste will then be used as a feed to two types of solidification processes (Kuhlman Tr. 3/24/77, p. 70). The waste will first be fed to the pilot spray calciner/in-can melter. Two canisters of solidified commercial fuel waste are expected to be produced by the end of CY 1978 (Platt letter, p. E2-1).

Battelle indicates the testing in FY 78 of the 5 MTU/day unit is needed "to show that the process can be scaled up for production plant use with easy operation and maintenance" (BNWL-2092, p. 126). This testing will permit detailed production facility design (*Ibid.*).

2. *Continuous Melter*

A second vitrification process under development at BNWL is the continuous melter, based on an established technology from the glass industry. This process involves the use of power electrodes submerged in a tank containing molten glass. High-level liquid waste or calcium and additives are fed directly into the melting cavity where heat transfer forms an oxide residue which melts into the pool of glass. Molten glass is drained off periodically or continuously into a canister (ERDA 76-43, p. 6.43-6.47). A vitrification plant using the continuous melter is currently operating at Battelle and has produced three tons of glass per day (nonradioactive, simulated commercial and defense wastes) (*Nucleonics Week*, p. 3). Direct processing of high-level liquid wastes has the advantage of eliminating the calcination step and thereby reducing costs. Radioactive testing at pilot-scale is planned by the 1980's or possibly sooner (Kuhlman, Tr. 3/24/77, p. 72). The design of a continuous melter for remote operation and maintenance has been considered to be one of the largest development

problems in waste solidification (Jennings Tr. 10/18/77, p. 52-53). Progress in this area will affect the availability of the continuous melter for commercial application.

3. *Fluidized Bed Calcination*

A fluidized bed calciner has been developed and operated at the Idaho National Engineering Laboratory since 1963 for solidifying wastes, having processed over 10 million liters of military wastes at routine rates in the range of 400 to 500 l/hr or two to three times the rate required at an AGNS-size facility (ERDA-76-43, p. 6.17). The process consists of introducing atomized wastes into a fluidized bed (a bed of granules which are suspended in a stream of air). Heat is provided to evaporate and denitrate the wastes resulting in a product consisting of a granular bed material and a powdered calcine which is withdrawn continually from the bottom of the unit.

The process has been pilot-scale tested with simulated commercial high-level wastes at INEL to demonstrate its feasibility for solidifying commercial wastes — BNWL-SA-5972, p. 3). The calciner at Idaho was contact-maintained and resulted in extended downtime (Smedira Tr., 10/25/77, p. 5). A new waste calcining facility using the fluidized bed is being built at Idaho and will be completely remote operated and maintained (*Id.*).

In addition, a continuous fed fluidized bed calciner has been successfully operated under non-radioactive conditions at Battelle at a 3 MTU/day rate (McElroy Tr. 3/21/77, p. 70; Kuhlman Tr., 3/24/77, p. 71). A batch-operated fluidized bed calciner was designed and built for the G.E. Morris facility (Lieberman Tr. 3/21/77, p. 454; ERDA-76-43, p. 6.15). The plant was never

allowed to operate, but for reasons other than waste solidification.

A program has been underway at DOE which has the primary goal of verifying the applicability of the fluidized bed calcination to Barnwell high-level wastes and generating data required for design and operation of a pilot plant facility (Lieberman Tr., 3/21/77, p. 454, ERDA-76-43, p. 6.20). Major efforts in the program are:

a. verification of the calcinability of simulated AGNS waste at steady state conditions in a large-scale unit;
b. verification of the ability of the candidate offgas cleanup system to remove particulate and volatile fission products and noxious chemicals to acceptable levels;
c. verification on a suitable scale of the ability to address major safety questions;
d. full-scale demonstration of a suitable calcine stabilization process;
e. evaluation of specific equipment to determine needs for modification; and
f. prototype equipment and remote maintenance mockup testing as necessary to minimize risks of significant process or equipment problems during plant operation (ERDA-76-43, p. 6.20).

4. *International Experience*

France: A continuous vitrification technique using a rotary calciner coupled to a melting furnace has been developed in France (Clelland 1976, p. 18). This rotary kiln, selected by AGNS for its waste solidification process (NUREG-0082, p. III-I), has been under development in France for over ten years (ERDA-76-43, p.

6.26). Within a year France plans to operate this process in a hot pilot plant facility at Marcoule, France (CONF-770102, p. 27). A second plant is anticipated to follow about five years later at La Hague, France (Clelland 1976, p. 43).

Federal Republic of Germany: Several processes are being developed at a bench-scale from which one or two may be selected for demonstration at the WAK and eventually the Eurochemic plant (Clelland 1976, p. 18). A solidification process is planned for demonstration in the early 1990's on a pilot scale (Clelland 1976, p. 18).

United Kingdom: A solidification process (HARVEST) was selected and developed with industrial scale demonstration planned for the mid-80's (Clelland 1976, p. 34). The HARVEST process involves mixing of high-level waste and a slurry of glass making constituents. The mixture enters a stainless steel container in a furnace and the material is continuously dried and incorporated into a glassy matrix. A cold pilot plant began operating at Harwell in 1975 and a radioactive pilot plant is now under construction at Windscale due to be completed by 1978 (Clelland 1976, p. 41). The construction of an industrial-scale fully active demonstration plant is planned for 1982 at Windscale, with operation by 1986 (Clelland 1976, p. 42).

Eurochemic: Incorporation of granular solidified high-level wastes into metal matrixes has been performed at pilot-scale at Eurochemic (Clelland 1976, p. 11). Radioactive runs have been carried out with glass beads containing Eurochemic Purex high-level waste. Two main solidification processes (LOTES process, in which wastes are fixed into an aluminum-phosphate lattice using a fluidized-bed type reactor, and the PAMELA

process, in which wastes are converted to vitreous phosphates yielding glass beads) have been developed at Eurochemic both yielding granular products (Clelland 1976, p. 15). Construction and operation of a pilot facility using a fluid bed calcination unit is being considered.

5. *Commercial Plants*

AGNS has considered the French rotary kiln process, the fluidized bed calciner and spray calcination/in-can melter process for its proposed reprocessing plant (NUREG-0082, p. III-I). They have preferred the French rotary kiln process, because of its extensive operating experience. Exxon has also included a fluidized bed calcination system in its plant design (Exxon PSAR, p. 7.4-6) and has suggested to DOE that a continuous fluidized bed calciner be developed as an alternative to the spray calciner (Exxon PSAR, p. 7.7-2).

Based on the scale of previous operation and testing, the spray calciner, in-can melter, continuous melter and fluidized bed calciner technologies exist for commercial high-level waste solidification, although each requires further development work before being applied to large-scale commercial use.

2.3.4.5 *Off-Gas Control*

Gaseous releases of radionuclides at reprocessing plants have been the subject of concern. "The effluents of the fuel reprocessing plants account for most of the public population dose in the fuel cycle and the most important nuclides are C-14, Kr-85, I-129, and H-3 or tritium (half-lives: 5700, 10, 1.6×10^7 and 12 years, respectively)" (APS, p. 29). The EPA has now set limits on the releases of Kr-85 (50,000 Ci/GW-yr) and I-129 (5 mCi/GW-yr) from the total fuel

cycle (40 CFR 190 (1977)). (These nuclides are also released at reactors.) Although C-14 delivers the largest part of the population dose commitment from the fuel cycle after about fifty years and the tritium dose to the population is about equal to the Kr-85 dose based on no controls (APS, p. V31); there currently are no control standards for C-14 and tritium. The EPA may also subsequently set limits on the releases of H-3 and C-14, but "the knowledge base is considered inadequate for such a determination" at present (EPA 1974, p. 73). The EPA standards do not immediately require the addition of controls, however. The Kr-85 and I-129 limits are applied only to releases from fuel fissioned after January 1, 1983 (40 CFR 190.12 (1977)). Thus, if the fuel is cooled for 2-5 years, controls are not required until the mid- to late 1980's. This approach was taken to allow a certain amount of lead time to develop and test at full scale gaseous control systems (Mason, *et al.*, p. 9).

1. *Iodine Control*

Gaseous iodine, both elemental iodine and organic iodine, is generated at a rate of approximately 380kg/yI-129 from the stack of a 5-ton/day reprocessing plant (ERDA 76-43, p. 13.12). Federal regulations would require a retention factor of approximately 300 for a fuel reprocessing plant (Yarbro, p. 2). The primary iodine removal system is the Iodex process which uses a nitric acid scrubbing system for removing and converting all volatile iodines to nonvolatile forms (Yarbro, p. 4). It has been demonstrated on a laboratory and small engineering scale (Gronier and Hannaford cited in ERDA 76-43, p. 13.18) and is capable of removing all significant iodine forms at very high retention factors (Yarbro, p. 4). Retention factors as high as 10 have been achieved (ERDA 76-43, p. 13.18). However, demonstration of

the system capability and long-term operability is required, as well as corrosion effects on the plant (ERDA 76-43, p. 13.19).

Another system for iodine removal from plant off-gas streams is the use of mercuric nitrate scrubbers. Limited laboratory-scale work has been done to develop a process for concentrating the mercuric iodine (ERDA 76-43, p. 13.17). The mercuric nitrate scrub system with a backup of silver zeolite beds has been installed in the AGNS plant for retention of iodine (Grey, p. 13-1). Conflicting statements regarding the ability of BNFP to meet EPA iodine requirements have been received by the Commission (Resnikoff Tr. 3/7/77, p. 566; and Yarbro Tr. 10/20/77, p. 124). Moreover, the system can be made inoperable in the presence of chlorides.

A caustic scrubbing technique is commercially available for iodine removal from off-gas streams. However, its application to fuel reprocessing is limited because of the low iodine removal efficiency (70-90 percent, Cooper, p. 30) and the large volume of iodine-containing waste generated in the process (ERDA 76-43, p. 13.13).

2. *Krypton Control*

Off-gas control technologies are also being developed for krypton-85. Although the total release of krypton from commercial fuel reprocessing plants to the environment has been permitted, EPA regulations will limit its release from the nuclear industry to 5×10^4 Ci/GW/yr, a retention factor of 5-10 (Yarbro, p. 2). The two most promising Kr-85 removal methods are the (1) cryogenic distillation method, which is a low temperature batch process separating krypton and xenon; and (2) fluorocarbon absorption, which selectively absorbs krypton from the off-gas stream.

The selective fluorocarbon absorption method is presently in pilot-scale development at the Oak Ridge Gaseous Diffusion Plant and is planned to be ready for testing with radioactive materials by 1980 (40 CFR 190, p. 170). Soluble gases such as krypton, xenon, carbon dioxide, and oxides of nitrogen are selectively absorbed from the feed gas and then concentrated for disposal (Yarbro, p. 4). Major advantages are that it is relatively insensitive to normal contaminants found in fuel reprocessing plant off-gases and is expected to have a removal efficiency of 98-99 percent (Cooper, p. 37).

The cryogenic distillation system, tested on essentially a pilot-plant scale at the Idaho Chemical Processing Plant, for Kr-85 removal is much closer to application than the fluorocarbon absorption system (40 CFR 190, p. 169). The availability of full-scale equipment is expected by 1982 (Cooper, p. 36) and the process is considered currently available for design of a demonstration system at a commercial reprocessing scale (NRC Responses, p. 65). High product purity and high removal efficiencies (99.0 to 99.5 percent) are major advantages of this technology (Cooper, p. 36). However, its intolerance to impurities in the feed gas, for example, water, CO_2, nitrogen oxides and ozone, may cause explosions (Cooper, p. 36) or plug gas feed lines. Front-end pretreatment equipment can be added to the cryogenic system to take out the impurities in the gas feed in order to avoid potential problems (ORNL, Tr. 10/20/77, p. 136). However, these add-ons increase the complexity of the system and may compromise its reliability (Culler Tr. 10/20/77, p. 139). Further, the process has only been operated on a campaign basis and long-term continuous operation has not been attempted.

Allied General Nuclear Services is reluctant to install either process in its Barnwell plant because of the potential releases of halides (corrosive to stainless steel in the plant) (Newman Tr. 3/8/77, p. 169) resulting from use of the fluorocarbon absorption method, and the potential production of ozone and resulting explosion through use of the cryogenic method (Newman Tr. 3/8/77, p. 168). AGNS concluded that both processes require final development and demonstration before the reliability of the system can be assessed (NUREG-0082, p. IX-7). In summary, both the cryogenic distillation and fluorocarbon absorption may be capable of controlling releases from a reprocessing plant off-gas stream. However, neither process is available as a complete system for use in a reprocessing plant (Gray, *et al.*, p. 13-3).

3. *Packaging and Disposal of Trapped Gases*

Once the radioactive gases are contained, the next step is to store and dispose of them. The development of storage and disposal techniques is in its preliminary stages. Final performance criteria for the storage or disposal of ^{85}Kr and ^{129}I are scheduled for development by 1980 (NRC Responses, p. 65). Regulations for disposal of ^{85}Kr and ^{129}I would be proposed approximately ten months following development of the criteria (NRC Responses, p. 65).

A DOE-funded program at Battelle is in progress to develop and demonstrate a technology to immobilize the waste ^{129}I and $^{14}CO_2$ generated at reprocessing plants (NRC Responses, p. 62). Pilot scale immobilization processes are scheduled for Fiscal Year 1980 (NRC Responses, p. 62). In addition, DOE has funded several programs for storage and disposal of Kr-85 at Battelle

Laboratories, Sandia Laboratories and Argonne National Laboratory (NRC Responses, p. 62-63).

Researchers at ORNL were very confident that the needed control technologies for Kr-85 and I-129 would be available when needed, even though more work is needed (Yarbo Tr. 10/20/77, pp. 124, 127, 130, 136-7). In view of the status and projected development programs for I-129 and Kr-85 removal and storage technologies as well as the extensive lead time before gas containment is required, the availability of the technologies for use when needed appears promising. We cannot conclude that the technology for this function currently exists.

2.3.4.6 *Conclusion*

Having examined the technologies for the major components of a reprocessing plant for commercial oxide fuels based on the Purex process, we conclude that all the current required technologies exist. However, the statute requires findings on the existence of technology for construction and *operation* of reprocessing *plants*. Whether the technology meets this more stringent test is discussed in Section 2.3.5.

2.3.5. *Technology for Operation of Reprocessing Plants*

Whether a technology exists for operation of reprocessing plants is dependent on both its "technical operability" and its "licensibility." [*sic*] "Technical operability" means that the plant will operate safely, reliably and routinely in an integrated mode. "Licensability" means that the plant can be expected to operate routinely within the bounds of all standards and criteria and therefore be "allowed" to operate. It does not necessarily mean it has to be licensed, only that there is enough information and experience to judge that standards and criteria are likely not to be violated.

There is sufficient information now to conclude it is questionable whether there is a reprocessing technology which is "technically operable" and "licensable."

2.3.5.1 *Technical Operability*

In 1975, two ERDA documents reviewing the status of the fuel cycle technologies concluded that while the basic technology was in hand, there was a lack of demonstrated operability for the integrated plant. A report from the Savannah River Laboratory (DPST-75-448, p. 27) stated:

> The major problems interfering with closing the LWR fuel cycle lie in demonstrating high reliability, attainability, and maintainability, low environmental impact, and acceptable economics for complete and fully integrated recycle plants.

Going on to detail what was missing, the report said (p. 29):

> Additional effort is also required on many of the reprocessing plant subsystems. Although NFS used the chop-leach fuel dissolution process, this process developed some difficulties and, therefore, long-term reliability has not been completely demonstrated on a commercial scale in the United States. . . .
>
> Similarly, the technology for handling plutonium product, while technically straightforward, has not been demonstrated. The treatment of purified aqueous plutonium streams demonstrated in the ERDA plants at Hanford and Savannah River differs from that which will apparently be used in industrial plants. . . .
>
> Perhaps most important, the technology for economic management of the various waste streams has never been demonstrated on a large scale with waste containing the level of radioactivity which will be present in the commercial waste.

ERDA-33 (p. xii) similarly listed the following as requiring demonstration of licensability, safety, safeguarding and economics:

1. Spent fuel reprocessing including plutonium conversion.
2. Safeguard systems.
3. Waste treatment and packaging.
4. Removal of radionuclides from gaseous and aqueous effluents, and their treatment and packaging for shipment.

There have been significant advances in certain areas of the technology since these statements were made, particularly waste solidification. Nevertheless, many of the same conclusions still hold true:

> . . . it is still necessary to demonstrate that existing technology is entirely satisfactory [for large reprocessing plants]. In some cases a scale-up factor of 20-40 has to be engineered, tested, and proved for the process itself [separations], the off-gas treatment, and the waste treatment facilities. The reliability of such plants will also need to be demonstrated. (OECD 1977, p. 42)
>
> *An essentially complete technical base exists for industrial-scale chemical reprocessing of spent uranium fuel elements from light water reactors.* The chemistry and engineering involved are well understood, have been tested in a variety of plants, and are unlikely to produce problems. The engineering of large plants is well advanced, having gone through several evolutionary stages. Large scale experience is needed in the chopping operation, the dissolving of PuO_2, and in the conversion of $Pu(NO_3)_4$ to PuO_2.
>
> There presently exists one industrial-scale separations facility at Barnwell, S.C. This plant has been designed

> carefully and competently to minimize operational hazards and radioactive emissions [sic]. Proof of the reliability of some segments on a large scale has not been reached, but will very likely be obtained if this plant is operated. Such operation would test predictions of reliability and performance of an industrial-scale facility which integrates the best currently available technology and which depends on a carefully chosen combination of remote and hands-on maintenance and operation. (APS, p. IV-5)

While considerable testing and engineering of the reprocessing technology has been done, problems of transferring a technology to a full-scale facility can preclude plant operation. The inoperability of the G.E. Morris reprocessing plant in Illinois, despite an investment of $64 million (Ford/MITRE, p. 322), is a case in point. Equipment failures and technical problems which occurred during pre-operational testing of the plant resulted in AEC's terminating the plant's construction permit (August 23, 1974) and requiring the facility to be made inoperable as a reprocessing plant (November 21, 1974) (NRC Appraisal, G.E. Morris Facility, p. 2). G.E. Nuclear Division Chief Bertram Wolfe was reported to have said that if the company had it to do [*sic*] over again, the new technology would have been tested at full scale before being cast (literally) in concrete as a production plant (Gillette, p. 771). Wolfe further stated "What we underestimated was the difficulty of going from a laboratory environment — where you have access to equipment — to a remotely operated production plant." (Gillette, p. 771)

While the G.E. problem has been characterized as "a classical managerial and engineering error and hadn't really anything to do with the reprocessing technology they chose to use," (Rodger Tr. 3/7/77, p. 17) the G.E. Technical

Study (the "Reed Report") on the Morris facility notes that there actually were a number of technical problems in the operation of the fluidized bed UNH calciner (Reed Report, p. 37), and "airveyor" solids transport system (Reed Report, p. 38), plugging and failures in instrument sensors (Reed Report, p. 37), and remote maintenance (Reed Report, p. 24, 32). These failures *combined* with the close coupling of the plant were the basis for the conclusion the plant would be inoperable.

Frank Pittman, former Director of the Division of Waste Management and Transportation of the Atomic Energy Commission, also cautioned: "There is, however, a wide gap between demonstration of technical feasibility and demonstration of a process which can be operated as a safe, efficient part of an industrial complex." (Pittman, p. 21) There has not been a demonstration of a safe, economic and reliable operation of a complete reprocessing plant.

Certainly, the NFS plant operation stands as a pioneering effort in the development of an operable commercial reprocessing technology. However, Robert Newman of AGNS stated: "As Dr. Resnikoff said yesterday, he doesn't consider the operation of the NFS plant as demonstrating reprocessing technology. Nor do we; nor do many other people (Tr. 3/8/77, p. 75)." He goes on:

> [I]t's been our belief that to demonstrate to the public, [and] to demonstrate to the rest of the industry that indeed reprocessing is viable . . . this demonstration [the AGNS plant] is needed. I agree the technology is there. It has never been put together in a single package and operated. And I cannot say that we're absolute in all our projections or releases. [But] to look at the whole package [separations, uranium conversion, plutonium conversion, and waste solidification], to prove that reprocessing can be done safely, can be done in

> a way that protects the environment, we think this demonstration is needed. (p. 76)

Paul McMurray of Exxon Nuclear recently reviewed the status of reprocessing technology and commented on its operability. One of the areas where the most work is needed is apparently waste solidification:

> . . . conversion of high level waste concentrates to calcine or glass is not ready for plant application except on a testing and demonstration basis. The proof testing of this technology is probably the single most important need in closing the fuel cycle. The processes have been adequately demonstrated on a cold scale and some radioactive testing has been done. However, integration of the processes into full-scale plant production type equipment has not yet been demonstrated as it is well known that the process environment is the most severe in the total reprocessing complex. Because of the high radioactivity and self-heating characteristics of these process materials it is known that scale-up will require significant equipment and facility development and thorough testing. (McMurray, p.6)

George Cunningham of DOE also noted engineering problems involved in developing processes and equipment for implementing waste handling technology on a large scale.*

---

*Cunningham testified:

> . . . we have established the technical feasibility [established the technical basis on a lab scale for vitrifying, packaging and storing the waste] of handling the wastes. . . . We are faced with some very difficult engineering problems, but we are not faced with having to determine the technical feasibility of solutions to immobilizing the waste. . . . We are now going into the engineering phase to develop processes and equipment for doing this work on a large scale. But there is a great deal of difference between working with small quantities of materials in laboratory hot cells to establish the basic chemical processes and techniques for handling the wastes, on the one hand, and going to large-scale equipment to handle substantial volumes of material on the other. (Cunningham, pp. 113-114)

On head-end processes McMurray states:

> Technology for head-end processes is developed. Fuel can be received, unloaded and stored, and fuel can be sheared in preparation for dissolution. However, the equipment systems for these tasks have not accumulated extensive operating experience at typical fuel exposures. Similarly, fuel can be dissolved but feed clarification systems and dissolution of mixed oxide recycle fuels have not accumulated extensive experience in commercial scale facilities. The commercial reprocessor has much experience yet to obtain in order to optimize these important feed operations. (*Id.*)

For conversion technologies, McMurray notes:

> Uranium conversion technology is well developed. Uranium fluorination technology utilizing hydrofluorination is also well established for natural uranium processing. Little operating experience has been accumulated on recycle uranium so that modifications to cope with alpha impurities and short-lived uranium 237 are anticipated. Direct fluorination technology has been developed but is essentially unavailable because it is in unreported propriety efforts. Technology for removing aipha impurities from uranium hexafluoride has been recently developed. (*Id.*)
>
> Plutonium conversion processes involving precipitation with oxalic acid or hydrogen peroxide followed by calcination are readily available and a great deal of operating experience has been accumulated. These processes have waste streams that require treatment and recycle which has prompted interest in direct plutonium denitration technology. This technology has been tested but does not have the established experience base of the precipitation processes. (*Ibid.*)

For off-gas treatment he notes:

> The technology for off-gas treatment which meets the U.S. environmental protection goals is currently under development. Except for iodine confinement where some plant experience has been acquired, the balance of the gaseous fission products involve technology not yet applied to this service. Krypton and carbon confinement involve add-on processes that do not disturb the underlying Purex process. Proposed tritium confinement technology if applied prior to aqueous processing steps could require adjustment to the head-end fuel dissolution technology on which most commercial fuel reprocessing plants have relied. (*Id.*, p. 7)

McMurray also discusses the maintainability of commercial reprocessing technology. He concludes that while there has been considerable experience with the Purex system,

> Similar experience with some of the ancillary processes to support the Purex process is yet to be acquired. Experience with the operation and maintenance of head-end systems to handle complex fuel assemblies and high exposure oxide fuel is now being obtained. There is little plant experience with the new fission gas confinement systems and waste calcination and vitrification equipment. (*Id.* p. 8)

Maintainability is an important consideration in plant operability. Maintenance is complicated in a reprocessing plant by the need for shielding and remote manipulation to protect workers from radiation. A completely remote maintenance design has been used successfuly at the DOE Hanford and Savannah River facilities, whereas the principal mode of maintenance at Idaho is contact maintenance following thorough decontamination; exposures at all sites have been low (Orth Tr. 3/7/77, p. 135). However, commercial plants have departed from the defense plant maintenance design, using more contact maintenance. NFS has

been criticized for its occupational exposure experience at the West Valley plant.

> While NFS usually remained within the maximum allowable limits set by AEC, the levels increased at a rate that caused AEC to become concerned over the possibility of each plant employee receiving an excessive radiation exposure. (GAO 1977, p. 19-20)

Moreover, repeated attempts to reduce exposures were not successful (GAO 1977, p.20; Resnikoff Tr. 3/7/77, p. 149-150). NFS began using transient workers to keep exposures to full-time workers within federal limits (Resnikoff Tr. 3/7/77, p. 148). Part of the problem at NFS was that areas designed for remote maintenance had to be entered for contact maintenance either when remote equipment failed and had to be repaired or was inadequate for the maintenance task (Rodger Tr. 3/7/77, p. 219; Resnikoff Tr. 3/7/77, pp. 149, 632).

Contact maintenance, while initially used at ICPP, is now giving way to remote maintenance at the plant due to "more recent considerations, including the decreasing allowable personnel exposure limits and the need for better onstream efficiencies" (Tr. 3/7/77, p. 533).

Since the cost of remote maintenance design is high, newer plants such as the AGNS and new ICPP facilities plan to combine maintenance philosophies to reduce maintenance in high or potentially high radiation areas to a practical minimum (Newman Tr. 3/8/77, p. 407; Orth Tr. 3/7/77, p. 533). The design and construction of a "minimum maintenance" plant awaits proof, during hot operation of the plant, that the concepts result in satisfactory on-stream time. GESMO board member Parker said ". . . it is still conjecture after analysis because there is no experience yet with a plant of this type." (GESMO Tr. 12/15/76, p. 1580). An AGNS report stated that, "Early verification is highly

desirable to assure the designers of subsequent plants that there is no need to spend the additional capital that would be necessary if all equipment were to be remotely maintained (Newman Tr. 3/8/77, p. 415)."

In view of the considerations noted above, the routine operability of the complete reprocessing technology is in doubt. Certainly, these problems could potentially be circumvented by redundancy, repair, or replacement, but it is precisely that information on whether enough redundancy has been built in, whether replacement will involve extraordinary cost, or whether repairs can be accomplished without excessive occupational radiation exposures that needs to be confirmed by test operations. All new technologies are subject to a "shakedown" period. Given the statements of industry, it appears this "shakedown" phase has not been completed.

According to one witness (Culler), the NRC performs the essential function of a "chief engineer," reviewing carefully the design of a plant and the measures taken for safe operation by the proposer of the technology (Tr. 3/8/77, pp. 36-7). Presumably, this engineering review will "catch" serious problems which might jeopardize plant operation. Of course, the scheme is not fool-proof since the G.E. Morris facility received a construction permit after the initial review, but was ultimately declared inoperable. Nevertheless, since the NRC has not completed its review of major portions of a reprocessing plant (waste solidification and plutonium conversion), nor has it completed its review of the AGNS plant for an operating license, the NRC "chief engineer" function has not been performed.

2.3.5.2 *Licensability*

Whether a technology for reprocessing plants is currently licensable is doubtful for a number of reasons. Foremost is the fact that certain essential criteria and standards have

not been set and therefore one cannot be certain the technology will meet the criteria once set. Certainly a Purex based separations facility has been licensed previously at NFS, but certain of the remaining units (waste solidification and plutonium conversion) lack necessary criteria for licensing. The principal criteria yet to be established are waste solidification and safeguards. The NRC staff response recently stated the problem succinctly:

> NRC has not received or reviewed a license application for solidification by calcination. it has therefore not ruled whether this technology satisfies the requirements [of 10 CFR 50, Appendix F]. Detailed criteria for solidification are under development and early technical analysis has been published (NUREG-0279). While we cannot state whether calcine would meet the developing criteria, we have not as yet excluded it from our own thinking. Until publication of a DEIS with its cost/benefit analysis we cannot be sure of an answer about even the ranking of candidate forms. Analysis independent of cost indicates calcine is not the best form. Small quantities of actual HLW have been solidified at the laboratory scale (100 gram quantity) by an in-can melting technique. NRC has not reviewed a license application for such a process or product and has not ruled whether it satisfies the requirements [of 10 CFR 50, Apendix F] [*sic*]. (NRC Responses, pp. 7-37, 38)

An applicant, therefore, is prevented from making a final selection of a waste solidification technology for installation in a reprocessing plant. "[T]he lack of definitive federal waste management criteria and asociated [*sic*] technology demonstrated on a commercial scale impedes installation of waste solidification facilities." (AGNS letter to N. Stetson, Tr. 3/8/77, p. 422) Consequently, AGNS stopped working on an engineering design for a waste solidification

unit (letter from A.K. Williams, quoted in Tr. 3/24/77, p. 90-91).

The absence of criteria is not simply a regulatory problem. The criteria set will also affect which technology must be employed and not all solidification technologies are equally advanced. As stated by NFS in an attachment (Deuster letter, p. 13) to a letter dated April 9, 1976 to N. Stetson, Savannah River Operations Office:

> A continuing stiffening of regulatory requirements for waste management has been evolving slowly since the AEC's policy on high level waste was promulgated in 1971 (requiring solidification). Unfortunately, the accompanying technology has not necessarily kept pace, and there is doubt over how these regulatory requirements will be met.

A similar situation exists with safeguards criteria. The objective of embarking on the Purex process thirty years ago was to produce plutonium in as pure a state as possible for weapons production (Nye 1977, p. 41). However, in adapting the process to commercial use, concerns were raised over the potential of the technology to make the raw material for atomic weapons available illicitly (see, e.g., Willrich and Taylor, p. 15). The fact that reactor grade plutonium can be used to fabricate a nuclear explosive was demonstrated in an underground test of such a device at the Nevada Test Site (L.A. Times, 9/14/77, p. 1).

The inadequacy of current U.S. safeguards to prevent the theft of plutonium or highly enriched uranium from licensed facilities is a problem currently being addressed by NRC (Builder Letter). The Special Safeguards Study ("Rosenbaum Report") prepared by Atomic Energy Commission consultants and released April 29, 1974, concluded:

> In recent years the factors which make safeguards a real, imminent, and vital issue have changed rapidly

> for the worse. Terrorists groups have increased their professional skills, intelligence networks, finances and level or [*sic*] armaments throughout the world.
>
> The factors involved in preventing the illegal acquisition of special nuclear material and the subsequent manufacture of nuclear weapons have received a great deal less attention than those associated with power plant accidents. The relevant regulations are far less stringent and we feel they are entirely inadequate to meet the threat.

Safeguards standards, measures to prevent the illicit diversion of plutonium were to be analyzed in the NRC's proceedings on the *G*eneric *E*nvironmental *S*tatement on the Use of Recycle Plutonium in *M*ixed *O*xide Fuel in Light Water Cooled Reactors (GESMO) (Rowden Letter to Udall, p. VI-2). A supplement to GESMO was being prepared to address safeguards explicitly (Chapman Statement, p. VI-9), but this supplement has not been issued. A number of regulatory changes were being considered to address the safeguards problem (NRC Responses to House App. Comm., p. VI-6). The changes involved measures for physical protection, materials accounting, and design criteria for reprocessing and plutonium handling facilities (NRC Responses to House App. Comm., p. VII-5, 6). However, the GESMO proceedings have been terminated (NRC Order, 12/23/77). As a result, it is not known what new technical criteria reprocessing plants must meet (APS, Ch. IV, p. 42).

A number of technical materials accounting devices are currently being developed and will be tested on a pilot plant and be ready for commercial application in 3-4 years according to ORNL staff (10/20/77, pp. 97-105). However, the accountability of nuclear materials is a particularly difficult problem in commercial reprocessing.

Loren Stieff, testifying for the nuclear industry, and with ten years of experience in the Arms Control and Disarmament Agency, has added:

> The safeguarding of a reprocessing plant is an exceedingly difficult job. And the larger the plant is, the more difficult it is. But the new thing that is absolutely clear, we do not know whether we can safeguard a reprocessing plant or not because it has not ben [*sic*] tried. The IAEA does not have a single reprocessing plant under safeguards.
>
> I simply submit that it is very premature to conclude that it cannot be done. I will acknowledge and I will be the first to acknowledge that there are formidable problems and the most serious of which being a question of scale, and the fact that the measurement errors in very large plants exceed the significant quantities which the IAEA assigns as target quantities for triggering its safeguards. But I simply say to you, it has not been done. We really don't know what the problems are yet. We have not been able to do it.
>
> The amount of money that has been spent in trying to set up the procedures and techniques for reprocessing plants is minuscule." (Tr. 6/13/77, pp. 133-134)

Therefore, there is a great deal of technical work to be done with regard to safeguarding of a plant. But the work goes beyond simple detection device additions to a plant. A broad ranging re-evaluation of the use of plutonium and specifically nuclear fuel cycles which avoid access to plutonium has been undertaken by the U.S. This policy was initiated by the President's April 7, 1977, message:

> [W]e will redirect funding of U.S. nuclear research and development programs to accelerate our research into alternative nuclear fuel cycles which do not involve direct access to materials useable in nuclear weapons.

(Statement by the President on Nuclear Power Policy, April 7, 1977, p. 1).

In the meantime, commercial reprocessing and recycling of plutonium is indefinitely deferred (*Id.*).

The review of alternate fuel cycles includes the following options for reprocessing and recycle technology (Spiewak Tr. 10/20/77, p. 876):

1. *Coprocessing*
   Plutonium and uranium or thorium are separated from fission products, but no pure plutonium stream exists.
2. *Spiking*
   Fission products or other radioisotopes are added to refabricted [*sic*] fuel to produce an intense radiation barrier.
3. *Denaturing*
   Fissile isotopes are diluted from non-fissile isotopes of the same chemical species.
4. *Nonaqueous Reprocessing*
   Some nonaqueous [e.g., non-Purex] processes may not have the capability to produce pure weapons material but would be able to produce recycle fuels.

These options require *substantial departures* from standard reprocessing technology. Coprocessing has never been implemented on a commercial scale (Pickard Tr. 6/16/77, p. 336). In addition, coprocessing will require the codenitration of a uranium/plutonium blend. Several processes are under development including direct thermal denitration; however, additional research is required before it would be ready for engineering design (Hyder Tr. 10/19/77, p. 69).

Options involving high radiation levels in final products will require heavy shielding and remote operation (Vondra Tr. 10/20/77, p. 182).

Options using thorium-based fuels will require development of thorium reprocessing technology. The development time for a commercial thorium fuel cycle and reactor system was estimated at 25 years (Spiewak Tr. 10/20/77, p. 58). Extensive head-end preparation and post-extraction refabrication processes are required for some thorium-uranium fuels and are still under active development (Lotts Tr. 10/20/77, pp. 244-270).

Nonaqueous and non-Purex based reprocessing technologies will require extensive development. There are thirteen general reprocessing technologies alternative to Purex. These include the Airox, Zinkal, melt-refining, and molten tin processes. Most of these have been taken beyond the theoretical plausibility stage: reaction rates and thermodynamics have been determined. But the scale-up and mechanical problems are not resolved in most of these systems (Anderson Tr. 3/7/77, pp. 29-37).

Consequently, if safeguards and non-proliferation criteria are set such that one of these options is required, additional technical development, in some cases very extensive, may be necessary to achieve an operable reprocessing technology. These shifts in criteria can render meaningless any findings on existence of a standard Purex-based reprocessing technology if another technique is chosen for implementation.

2.3.5.3 *Conclusion*

A complete and operable technology for reprocessing commercial fuels will not have been established until:

1. A shakedown run has been completed of the equipment to resolve questions of operability, reliability, maintainability and safety.

2. Criteria, including high-level waste forms and safeguards criteria, have been set for all portions of a reprocessing plant.
3. Federal reviews of reprocessing technology are complete.

2.4 *Approval of Reprocessing Plants*

Public Resources Code Section 25524.1 (a) conditions CERCDC certification of nuclear powerplants upon a finding,

> "that the United States through its authorized agency has identified and approved, and there exists a technology for the construction and operation of, nuclear fuel rod reprocessing plants."

It should be noted that the statute requires findings on approval of nuclear fuel rod reprocessing *plants*, not on approval of a *technology* for reprocessing. The Commission has therefore examined issues relating directly to reprocessing plant approval (See Appendix B).

The Commission finds that the United States through its authorized agency has not "identified and approved nuclear fuel rod reprocessing plants." This finding is based on:

1. the December 27, 1977 NRC Order on Mixed Oxide Fuel terminating GESMO and denying AGNS and Exxon license applications,
2. President Carter's April 7, 1977, announcement to indefinitely defer reprocessing,
3. the October 4, 1977, White House letter to the NRC setting forth the President's position that GESMO should be terminated and interim licenses for fuel cycle facilities denied,
4. AEC/NRC's failure to issue a full-term operating license for a complete reprocessing plant, and

5. the failure to complete a NEPA review of reprocessing technology (GESMO), which is required prior to plant approval.

After reviewing several candidates for "authorized agency" (See Appendix B) the Commission concludes that NRC has the most extensive, although not the exclusive, authority for licensing and regulatory functions pertaining to the design, location and operation of nuclear facilities (See p. B-6). On December 20, 1977, NRC voted to terminate proceedings for GESMO (Generic Environmental Statement on Mixed Oxide Fuel) as well as Exxon and AGNS reprocessing plant licensing proceedings. The Energy Commission considers this order to represent explicit NRC disapproval of the implementation of reprocessing technology. This NRC Order is based, in part, upon President Carter's April 7 statement indefinitely deferring reprocessing and upon the President's views on the future course of GESMO and the individual licensing proceedings.

On April 7, 1977, President Carter announced that:

> [W]e will defer indefinitely the commercial reprocessing and recycling of the plutonium produced in the U.S. nuclear power programs. From our own experience we have concluded that a viable and economic nuclear power program can be sustained without such reprocessing and recycling. The plant at Barnwell, South Carolina, will receive neither federal encouragement nor funding for is completion as a reprocessing facility. . .
>
> [W]e will redirect funding of U.S. nuclear research and development programs to accelerate our research into alternative nuclear fuel cycles which do not involve direct access to materials useable in nuclear weapons.

On October 4, 1977, in a letter from Stuart Eizenstat to the NRC the Administration stated specifically that GESMO

and NRC staff reviews and hearings related to recycle activities should be terminated and that interim licensing for fuel cycle facilities (AGNS and Exxon) as well as interim licensing for use of mixed oxide fuel in reactors (except in small quantities for experimental purposes) should be denied (42 Fed. Reg. 57186, November 1, 1977). The letter further stated, "The President believes that our goal of stopping the spread of nuclear weapons capability among non-weapons states *can be significantly improved by a halt in Purex-reprocessing*." "The administration has proposed an accelerated research and development program to examine alternative fuel cycles not involving direct access to plutonium."

At a minimum these statements indicate Presidential direction to suspend reprocessing technology and to increase support of alternative nuclear technologies not involving direct access to weapons materials. Based on these statements there is considerable uncertainty that Purex reprocessing will be "identified" and "approved" by the U.S. government for further development.

There are four commercial plants in existence or planned in the U.S. for reprocessing spent fuel. These plants are: the Nuclear Fuel Services Plant in West Valley, New York; the General Electric Midwest Fuel Recovery Plant in Morris, Illinois; the Allied-General Nuclear Services Plant in Barnwell, South Carolina; and the proposed Exxon Nuclear Fuel Recovery and Recycle Center in Oak Ridge, Tennessee. (Bernero Tr. 3/8/77, pp. 196-197) None of these plants are operating or "will be licensed to operate unless the current considerations of wide-scale use of recycled plutonium (GESMO) show that it is justified" (Bernero Tr. 3/8/77, p. 197) Licensing status of the plants are as follows (Bernero Tr. 3/8/77, pp. 198-199):

1. The NFS plant will most likely not operate again; it was issued a provisional license in 1966 and required relicensing following the plant's closure in 1972 for expansion and modification. (Smith, pp. 25-26) Uncertainty regarding whether the plant even if modified could meet federal requirements led in part to NFS' announcement that it would no longer pursue licensing efforts to modify and expand the facility and that it would withdraw from the reprocessing business. (Deuster, p. 93)
2. The General Electric plant at Morris, Illinois (construction permit issued in 1967) experienced problems during preoperational checkout and was never licensed to operate as a reprocessing plant. (It is now licensed to store spent fuel.)
3. The Allied-General Nuclear Services plant was issued a construction permit in 1970 and the central part of the plant, the separations facility, is now complete. However, the plant lacks the facilities for solidification of high-level wastes and plutonium nitrate. A further pre-condition to licensing was completion of the plutonium recycle proceeding (GESMO).
4. The Exxon Nuclear Corp. filed a license application for its proposed reprocessing plant at Oak Ridge, Tennessee. The safety and environmental reviews of the plant were initiated, although a construction permit could not be granted until completion of GESMO.

The pending licensing proceedings for the Barnwell, Exxon, and West Valley reprocessing plants were specifically terminated by the December 27, 1977, NRC Order.

The Commission concludes that past issuance of construction permits for the G. E. Morris, NFS, and AGNS plants does not constitute final NRC approval for operation

of these facilities. As previously mentioned, operating licenses were never issued for the NFS, Morris or Barnwell plants. (Bernero Tr. 3/8/77, p. 199) And, as noted above, all pending license applications have been terminated.

The United States Supreme Court has indicated that no facility is considered to be approved by the AEC/NRC until it has received both a construction permit and an operating license. *Power Reactor Development Co. v. International Union of Electrical Workers 367 U.S. 396, 411, 415 (1961).*

Further the Commission does not consider prior licensing (1966) by AEC of the NFS plant to constitute approval of a reprocessing plant. First, the NFS plant is not a complete reprocessing facility since it does not include facilities for waste solidification and plutonium conversion. (Bernero Tr. 3/8/77, p. 197) Second, the separations facility was licensed in the 1960's when the regulatory process for nuclear plants was relatively "primitive." (Bernero Tr. 3/8/77, p. 208). Since 1966, when NFS was licensed to operate, dramatic changes have occurred in regulatory policies and requirements related to safety and the environment. (Smith, p. 25; Bernero Tr. 3/8/77, p. 208) NFS was shut down in 1972 for expansion, and design changes were undertaken to bring the plant to current standards. (Bernero Tr. 3/8/77, p. 202) NFS was required to meet these new federal regulations prior to resuming plant operation. (Deuster, p. 92) Because of the many changes required of the facility, the AEC required NFS to apply for a new construction permit and operating license "so that the substantially revised facility, as proposed, would receive a comprehensive review with ample opportunity for the public to comment." (Smith, p. 26) Ralph W. Deuster, President of Nuclear Fuel Services, Inc., testified that there was great uncertainty, regardless of cost, whether it was possible to modify the facility to meet these requirements. (Deuster, p. 93)

> But even with substantial modifications and the construction of a massive enclosure required for natural phenomena protection, the existing separations facility might not have met the changes in regulatory requirements. (Deuster, p. 93)

This uncertainty, combined with doubt over the outcome of GESMO, and economic consideration, led to the September 22, 1976, announcement by NFS that it would no longer pursue its licensing efforts to modify and expand the facility and that it would withdraw from the reprocessing business. (Deuster, p. 93)

It should be noted that NFS was granted a *provisional* operating license, not a full-term license. AEC considered there to be:

> features, characteristics or components of the proposed facility as to which it appears desirable to obtain actual operating experience before issuance of an operating license for the full term requested in the application. (License No. CSF-1)

A full-term operating license was never issued for the plant.

The Commission, therefore, concludes that issuance of a provisional license by AEC in 1966: (1) for only a portion of a reprocessing plant, and (2) prior to the development of significant federal standards affecting facility licensing combined with the uncertainty whether the plant even when modified could meet federal requirements, did not constitute final NRC approval of a reprocessing plant. NRC approval in the form of an operating license is required prior to operation of a plant.

As discussed in Appendix B, the National Environmental Policy Act (NEPA) of 1969 requires completion of an adequate environmental impact statement before implementation of a technology. Further, the *NRDC v. NRC* (GESMO)

decision prohibits NRC from granting licenses to construct or operate fuel reprocessing plants until such an environmental impact statement, including a safeguards supplement, has been issued on plutonium recycle (p. B-10). The generic EIS on reprocessing, GESMO (Generic Environmental Statement on Mixed Oxides), was intended to be a comprehensive NEPA evaluation of plutonium recycle and the use of mixed oxide fuels. Approval of reprocessing technology and plant licensing, therefore, at a minimum requires compliance with NEPA and completion of the GESMO proceedings.

A Draft Environmental Statement was published in 1973 for the Barnwell plant. In 1974, the Final Environmental Statement was published and a supplement issued in 1976 as a result of the requirement of new facilities for Barnwell. (Bernero Tr. 3/8/77, p. 2010 This supplement includes all facilities required (separations, UF_6 conversion, solidification of plutonium nitrate, solidification of waste, fuel storage) and considers their combined environmental impacts (Bernero Tr. 3/8/77, p. 202) In addition the NRC safety evaluation for the operating license of the plant was not completed. (Bernero Tr. 3/8/77, p. 202) The environmental hearings for the plant confirming the construction permit and operating license for Barnwell were begun in September 1974. (Bernero Tr. 3/8/77, p. 201) However, the recent termination by NRC or GESMO proceedings and hearings related to licensing of Barnwell and Exxon plants precludes completion of the NEPA review for reprocessing and approval of commercial reprocessing plants. Consequently, even the first step necessary to secure approval for reprocessing has not been completed.

Conclusion

Because of NRC's specific disapproval of the implementation of reprocessing technology, termination of all reprocessing plant licensing proceedings, the failure to complete

a generic EIS, and the lack of licensing for a complete reprocessing facility, the Commission concludes that neither Purex-reprocessing technology nor reprocessing plants for commercial LWR fuel has been identified and approved by the U.S. through its authorized agency.

REPROCESSING REFERENCES

ACDA

International Technology Project Institute of International Studies, U.C. Berkeley, *Non-Proliferation and Nuclear Waste Management*, Contract AC6AC725 sponsored by U.S. Arms Control and Disarmament Agency, February 1977.

AGNS

Allied-General Nuclear Services, *Nuclear Fuel Cycle Closure Alternatives*, April 1976. (Reprinted in Tr. 2/1/77, pp. 269-445)

AIF Policy Statement

Atomic Industrial Forum Review Group, "The Importance of Closing the Nuclear Fuel Cycle," October 1, 1976.

APS

American Physical Society, *Report to the American Physical Society by the Study Group On Nuclear Fuel Cycles and Waste Management*, July 1977.

Assembly Committee Hearings

California State Assembly Committee on Resources, Land Use, and Energy, *Hearings on Proposition 15, The Nuclear Initiative*, Vols. I-XVI, October 14, 1975 through May 14, 1976.

BNFL

BNFL Document No. 232, "A Cost Assessment of Alternative Methods of Dealing with Irradiated Oxide Fuel."

BNWL-2092

Battelle Pacific Northwest Laboratories, *High-Level Waste Vitrification by Spray Calcination/In-Can Melting*, November 1976.

BNWL-2186

Battelle Pacific Northwest Laboratories, *Solvent Extraction Equipment: Evaluation Study Part 2*, Workshop Proceedings, January 1977.

Builder Letter

Memorandum of January 19, 1976 from Carl H. Builder, Director, Division of Safeguards, NRC, to Ronald A. Brightsen, Assistant Director for Licensing, Division f [*sic*] Safeguards, NRC; re: Adequacy of Current Safeguards, as cited on p. VI "Correspondence with the Nuclear Regulatory Commission and the Energy Research and Development Administration," prepared by the Subcommitee on Energy and the Environment of the House Committee on Interior and Insular Affairs, November 1976.

BNWL-SA-5972

Battelle Pacific Northwest Laboratories, W.F. Bonner and W.A. Ross, *Current High-Level Waste Solidification Technology*.

Chapman Statement

Excerpts from Statement of Kenneth R. Chapman, Director, Office of Nuclear Material Safety and Safeguards, U.S. Nuclear Regulatory Commission before the Subcommittee on Energy and Environment, House Committee on Interior and Insular Affairs, February 27, 1976, in *Correspondence with the Nuclear Regulatory Commission and the Energy Research and Development Administration*, Subcommittee on Energy and the Environment of the House Committee on Interior and Insular Affairs, November 1976.

Clelland, 1972

Clelland, D.W., "High Level Radioactive Waste Management in the U.K.," *Symp. on Management of Ra-*

dioactive Waste from Fuel Reprocessing, Paris, November 27 - December 1, 1972.

Clelland, 1976

Clelland, D.W., R. Bonniaud, A. D.W. Corbet, E. Detilleux, and H. Krause, "A Review of European High Level Waste Solidification Technology," presented at International Symposium on the Management of Wastes from the LWR Fuel Cycle, Denver, Colorado, 1-16 July 1976.

CONF-770102

U.S. Energy Research and Development Administration, Report CONF-770102, *Ceramic and Glass Radioactive Waste Forms*, (1977).

Cooper

Cooper, H.B. "A Technical and Economic Evaluation of the Atmospheric Containment Technology for Radioactive Isotope Release from Nuclear Fuel Reprocessing," GESMO Hearing, Docket No. RM-50-5, March 4, 1977.

Costello and Levins

Costello, J.M. and D.M. Levins, "Comparative Economics of Pulse Columns and Centrifugal Contractors for Solvent Extraction in Nuclear Fuel Reprocessing Plants," *Annals Nucl. Energy* 3:7-83. 1976.

Cunningham

Cunningham, George, Acting Deputy Assistant Administrator for Nuclear Energy, *Energy Research Development Administration Hearings on Nuclear Waste Disposal Costs (West Valley, New York)* before a Subcommittee of the Committee on Government Operations, on March 10, 1977.

Deuster Letter

Deuster, Ralph W., President of Nucler [*sic*] Fuel Ser-

vices, letter of April 9, 1976 to Mr. N. Stetson, Manager, Savannah River Operations, ERDA.

Deuster Testimony

Deuster, Ralph W., President of Nuclear Fuel Services; testimony on March 10, 1977 at Hearings on Nucelar [*sic*] Waste Disposal Costs, West Valley, New York before a Subcommittee of the House Committee on Government Operations.

DPST-75-448

Du Pont de Nemours and Co., *Assessment of Nuclear Fuel Reprocessing* September 1975 (Draft).

DPST-75-517

Du Pont de Nemours and Co., *Program Plan for Research and Development in Support of LWR Fuel Recycle*, December 17, 1975.

DPST-LWR-76-1-1

Du Pont de Nemours and Co., *Savannah River Laboratory Quarterly Report, Light Water Reactor Fuel Recycle*, January-March 1976.

DPST-76-2-3

Du Pont de Nemours and Co., *Composite Quarterly Report Light Water Reactor Fuel Recycle*, July-September 1976.

DPST-LWR-76-2-4

Du Pont de Nemours and Co., *Composite Quarterly Report Light Water Reactor Fuel Recycle*, October-December 1976.

DPST-LWR-77-1-1

E.I. Du Pont de Nemours and Co., *Savannah River Laboratory Quarterly Report - Light Water Reactor Fuel Recycle*, January-March 1977, May 1977.

EPA 1974

U.S. Environmental Protection Agency, *Preliminary*

Environmental Analysis of a Generic Fuel Reprocessing Facility, EPA-520/3-75-003, May 1974.

EPA 1976

U.S. Environmental Protection Agency, EPA 520/4-76-016, 40 CFR 190, *Environmental Radiation Protection Requirements for Normal Operations of Activities in the Uranium Fuel Cycle, Final Environmental Statement*, Vol. 1, November 1, 1976.

ERDA-1

U.S. ERDA, *Report of the Liquid Metal Fast Breeder Reactor Program Review Group* (ERDA-1), January 1975.

ERDA-25

LWR Spent Fuel Disposition Capabilities 1975-1984, (ERDA-25), March 1975.

ERDA-33

U.S. Energy Research and Development Agency, *Nuclear Fuel Cycle: A Report by the Fuel Cycle Task Force*, (ERDA-33), March 1975.

ERDA 76-43

U.S. ERDA, *Alternatives for Managing Wastes from Reactors and Post Fission Operations in the LWR Fuel Cycle*, Vols. 1-5 (ERDA 76-43), 1976.

ERDA-76/121

U.S. ERDA, *Benefit Analysis of Reprocessing and Recyling Light Water Reactor Fuel*, December 1976.

ERDA 77-25

LWR Spent Fuel Disposition Capabilities 1977-1986 (1977) Edition), (ERDA 77-25), May 1977.

ERDA-77-75

Energy Research and Development Administration, *Light Water Reactor Fuel Reprocessing and Recycling*, (ERDA-77-75), July 1977.

Exxon PSAR

Exxon Nuclear Co., Inc., *Nuclear Fuel Recovery and Recycling Center Preliminary Safety Analysis Report*, Docket No. 50-564, September 1977.

Ford/MITRE

Ford Foundation/The MITRE Corporation, *Nuclear Power: Issues and Choices*, Ballinger Publishing Co., 1977.

Franklin

Franklin, N.L. "Irradiated Fuel Cycle." Paper presented at the European Nuclear Conference, Nuclear Energy Maturity, Paris, 21-25, April 1975.

GAO

U.S. General Accounting Office. *Issues Related to the Closing of the Nuclear Fuel Services, Inc., Reprocessing Plant at West Valley, New York*, Report to the Conservation, Energy and Natural Resources Subcommittee, House Committee on Government Operations, March 8, 1977.

GESMO

U.S. Nuclear Regulatory Commission, *Final Generic Environmental Statement on the Use of Recycle Plutonium in Mixed Oxide Fuel in Light Water Cooled Reactors*, Vols. 1-5, (NUREG-0002), August 1976.

Gillette, R.

Gillette, R., "Nuclear Fuel Reprocessing: G.E.'s Balkey Plant Poses Shortages," *Science* 185:770-771, 1974.

Gray

Gray, J.H., E.W. Murbach and A.K. Williams. "Experience and Plans for Effluent Control and LWR Fuel Reprocessing Plants." Paper presented at ANS-EIChE

Meeting, Controlling Air-Borne Effluents from Fuel Cycle Plants, 5-6 August 1976.

Gronier and Hannaford

Gronier, W.S. and B.A. Hannaford. *An Engineering Evaluation of the Iodox Process: Part 2: Removal of Iodine from Air Using a Nitric Acid Scrub in a Bubble-Cap Column; Part 3: Correlation of Mass-Transfer Data; part 4: Process Sensitivity to Impurities*, (ORNL-TM-4701), Oak Ridge National Laboratory, Oak Ridge, TN, May 1975, cited on p. 13.18 of ERDA-76-43.

Hoffman

Hoffman, T.L. "Corrosion Evaluation of Stainless Steels in High Level Radioactive Wastes." *Materials Performance* 15:p. 34-38, 1976.

ICP-1101

Idaho National Engineering Laboratory, C.M. Slansky, B.R. Dickey, B.C. Musgrave and K.L. Rohde, *LWR Fuel Reprocessing and Recycle Progress Report for April 1 - June 30, 1976*, November 1976.

ICP-1110

Idaho National Engineering Laboratory, C.N. Slansky, B.R. Dickey, B.C. Musgrave and K.L. Rohde, *LWR Fuel Reprocessing and Recycle Progress Report for October 1-December 31, 1976*, January 1977.

ICP-1111

Idaho National Engineering Laboratory, G.M. Slansky, B.R. Dickey, B.C. Musgrave and K.L. Rohde, *Technical Division Quarterly Progress Report. Oct. 1 - Dec. 31, 1976*, March 1977.

June 1971 Hearing

U.S. Senate, Hearing Before the Committee on Interior

and Insular Affairs; *The President's Energy Message*, June 15, 1971.

LA-6721-PR

Los Alamos Scientific Laboratory, D.F. Bowersox and J.P. Shipley, *Conversion of Plutonium Nitrate Solution to Oxide Part 1, November 1 - December 31, 1976*, February 1977.

L.A. Times 9/14/77

Gillette, R. "Reactor Fuel Used in Bomb: Proves Civilian Plants Can be Atomic Arsenals." *Los Angeles Times* September 14, 1977.

License No. CSF - 1

U.S. Atomic Energy Commission Nuclear Fuel Services, Inc. and New York State Atomic and Space Development Authority, Docket No. 50-201, Provisional Operating License No. CSF -, April 19, 1966.

Mason

Mason, E.A., R.E. Cunningham, J.E. Hard, R.J. Mattson, R.D., Smith and H.T. Peterson, "Regulatory Requirements for Radiation Protection" *International Atomic Energy Agency Conference*, Salzburg, Austria, 2-13 May 1977.

McMurray

McMurray, P.R., "Reprocessing Technology for Present Water Reactor Fuels." *International Atomic Energy Agency Conference*, Salzburg, Austria, 2-13, May 1977.

NRC Appraisal, G.E. Morris Facility

U.S. Nuclear Regulatory Commission "Environmental Impact Appraisal by Division of Fuel Cycle and Material Safety Related to License Amendment for Materials License No. SNM-1265, Morris Operation Facility," Docket No. 70-1308, December 3, 1975.

NRC Order, 12/27/77

NRC Order on Mixed-Oxide Fuel issued December 27, 1977, Docket No. RM-50-5.

NRC /Response to House App. Comm.

NRC Responses to Questions Asked by the House Appropriations Committee 3/9/76, in *Correspondence with the Nuclear Regulatory Commission and the Energy Research and Development Administration*, by Subcommittee on Energy and the Environment, of the House Committee on Interior and Insular Affairs, November 1976.

NRC Responses

Nuclear Regulatory Commission responses to questions submitted by participants in Table S-3 Proceedings, November 1977.

Nucl. Week

McGraw-Hill Publishing Co., *Nucleonics Week*.

NUREG-0116

U.S. Nuclear Regulatory Commission. *Environmental Survey of the Reprocessing and Waste Management Portions of the LWR Fuel Cycle*, (NUREG-0116) (Suppl. 1 to WASH-1248), October 1976.

Nye

Nye, Joseph, "Time to Plan for the Next Generation of Nuclear Technology," Bulletin of Atomic Scientists, October 1977.

OECD, 1977

Nuclear Energy Agency, Organization for Economic Cooperation and Development, *Objectives, Concepts and Strategies for the Mnaagement* [*sic*] of Radioactive Water Arising from Nuclear Power, September 1977.

Oldham

Oldham, W., General Manager, West Valley Opera-

tions: testimony on March 10, 1977, *Hearings on Nuclear Waste Disposal Costs West Valley, New York*, before a Subcommittee of the House Committee on Government Operations.

ORNL-TM-5547

Oak Ridge National Laboratory, B.L. Vondra, *LWR Fuel Reprocessing and Recycle Program Quarterly Report for Period April 1 to June 30, 1976.*

ORNL-TM-5660

Oak Ridge National Laboratory, B.L. Vondra, *LWR Fuel Reprocessing and Recycle Program Quarterly Report for Period July 1 to September 30, 1976.*

OTA

U.S. Congress Office of Technology Assessment, *Nuclear Proliferation and Safeguards*, 1977.

Parker, p. 1580

Board Member Dr. Frank Leon Parker, U.S. Nuclear Regulatory Commission, GESMO Hearing, Docket No. RM-50-5, December 15, 1976.

Pittman

Pittman, Frank. "AEC Evaluation of Programs for Management of Commercial Radioactive Waste." Paper presented at the AIF-EEI Conference on Land Use Planning, San Francisco, California, June 16-19, 1974.

Platt Letter

Letter from A.M. Platt, Manager, Nuclear Waste Program Office of Battelle to R.B. Goranson, Chief, Nuclear Waste Technology, Department of Energy Richland Operations Office, November 23, 1977.

Reassessment Report

Assembly Committee on Resources, Land Use, and Energy, *Reassessment of Nuclear Energy in California:*

A Policy Analysis of Proposition 15 and Its Alternatives, May 10, 1976.

Reed Report

General Electric, *Midwest Fuel Recovery Plant Technical Study Report*, July 5, 1974.

Richards Letter to Chapman

Richards, Robert W., ERDA, letter with enclosures to Kenneth Chapman, NRC, dated February 1, 1977.

"Rosenbaum Report"

Excerpts cited on p. VI-19 in *Correspondence with the Nuclear Regulatory Commission and the Energy Research and Development Administration*, prepared by the Subcommittee on Energy and the Environment, of the House Committee on Interior and Insular Affairs, November 1976.

Rowden Letter to Udall

Letter from Marcus A. Rowden, NRC, to Congressman Morris K. Udall, April 7, 1976, in *Correspondence with the Nuclear Regulatory Commission and the Energy Research and Development Administration*, by Subcommittee on Energy and the Environment of the House Committee on Interior and Insular Affairs, November 1976.

RFP-2552

Rockwell International, G.D. Lehmkuhl, *Light Water Reactor Fuel Recycle Program Plutonium Nitrate-to-Oxide Conversion Project Initial Report*, April 1976.

RFP-2573

Rockwell International, G.D. Lehmkuhl, *Light Water Reactor Fuel Recycle Program Plutonium Nitrate-to-Oxide Conversion Project Progress Report, May-June 1976*, January 17, 1977.

RFP-2590

Rockwell International, G.D. Lehmkuhl, *Light Water Reactor Fuel Recycle Program Plutonium Nitrate-to-Oxide Conversion Project Progress Report, July-September 1976*, February 7, 1977.

Savage

Savage, P.R., "Nuclear-Power Prospects Soured by Oxide-Fuel Reprocessing Stall." *Chem. Engineering*, February 28, 1977.

Schuller et al.

Schuller, W., K.L. Huppert, R. Kroebel, G. Baumgartel, F. Baumgartner. "Fuel Reprocessing and Waste Treatment Activities at the Karlsruhe Nuclear Research Center," *Internat. Atomic Energy Agency Conf.* (IAEA-CN-36/571), Salzburg, Austria, 2-13 May 1977.

Smith

Smith, Clifford, Nuclear Regulatory Commission; testimony on March 8, 1977 at *Hearings on Nuclear Waste Disposal Costs: West Valley, New York*, before a Subcommittee of the House Committee on Government Operations.

SRL

F. R. Field, Savannah River Laboratory, *Economic Analysis of LWR Fuel Cycles* (DP-1360), May 1977.

Statement of October 28, 1976

President Ford, "Statement by the President on Nuclear Policy," October 28, 1976.

Statement of April 7, 1977

President Carter, "Statement by the President on Nuclear Power Policy," April 7, 1977.

Taylor

Vince Taylor, GESMO Hearing Record Docket No. RM-50-5, *Prepared Testimony of Dr. Vince Taylor* for

California Energy Resources Conservation and Development Commission, March 4, 1977.

Utilities Position Statement

California Electric Utilities and Industry, *Summary Position Statement Regarding Nuclear Reprocessing and Waste Disposal, California Public Resources Code 25524.1 and 25524.2*, May 1977.

Willrich and Taylor

Willrich, M. and Taylor, T.B., *Nuclear Theft: Risks and Safeguards*, Ballinger Publishing Co., 1974.

Wohlstetter

Albert Wohlstetter, et al., *Moving Toward Life in a Nuclear Armed Crowd?* (prepared for U.S. Arms Control and Disarmament Agency for Contract ACDA/PAB-263), April 1976.

Yarbro

Yarbro, O.O., and J.C. Mailen. "Retention of Gaseous Isotopes." *Internat. Atomic Energy Agency Conf.*, Salzburg, Austria, 2-13 May, 1977.

SECTION 3.0: SPENT FUEL STORAGE

3.1 *Summary*

When a reactor is refueled the depleted or "spent" fuel is unloaded and stored in a water-filled spent fuel storage pool at the reactor site. Until recently, it was assumed that this fuel would be reprocessed, and the storage pools were designed as short-term holding facilities with limited storage capacities (Section 3.2).

Now reprocessing has been deferred, and the spent fuel is accumulating in storage pools. This accumulation threatens reactor operation at two levels (Section 3.2.2):

1. When a pool is too full to allow all the fuel in the reactor core to be unloaded, the pool no longer has a "full core discharge capability" (FCDC). Loss of FCDC may force shutdown of the reactor if certain inspections are required by NRC or in the event of an unanticipated accident which requires unloading of the reactor.
2. During refueling typically one-third of the core is unloaded. If there is no longer enough room in the pool to store this fuel the reactor must be shut down, since refueling is impossible.

The prospect of widespread loss of nuclear generating capacity is a real one—studies by the industry and government show that as many as 28 reactors could be forced to shut down by 1986 (Section 3.2.3). P.R.C. 22524.1(b) responds to this problem by requiring each prospective reactor operator to show that a full core reserve will be maintained at all times. That issue will be addressed in each individual application, but the background of the problem is addressed generically in this report (Section 3.3).

There are three principal alternatives for spent fuel in the absence of reprocessing: expansion of storage capacity, at

the reactor site, away-from-reactor (AFR) storage, and final geologic disposal (Section 3.4). Our review convinces us that the third option is the only one that can be planned for with any certainty. The recent announcement by DOE of the government intention to accept spent fuel has not clarified the situation; instead the only effect of the policy thus far has been to prompt General Electric to suspend its proposal to increase storage capacity at its Morris, Illinois facility (Section 3.5).

Because of this uncertainty, on-site expansion seems to be the prudent and feasible choice for a reactor operator today (Section 3.6). However, storing these continually-increasing amounts of spent fuel at dispersed sites in temporary holding facilities is not a permanent solution to the waste problem. Because the schedule for a permanent solution is in doubt, the Commission, as discussed in Section 3.7, is considering certain proposed guidelines for future applicants to assure a prudent and adequate spent fuel storage capability. Under these guidelines new reactor operators should provide at least 10 years' storage capacity construct fuel storage facilities to allow capacity expansion up to a full lifetime's discharge, and review pool designs to safely store all the fuel produced during the reactor's lifetime for periods up to 50 years.

3.2 *The Spent Fuel Storage Problem*

3.2.1 *Background*

A typical reactor is refueled once a year, when one-third or one-fourth of the fuel in the core is discharged. Fresh fuel is then added and the reactor is returned to service. The spent fuel is intensely radioactive and contains most of the remnants of the fission process, including fission products and unused fuel. This fuel is handled and stored in a water

basin, with approximately ten feet of water providing shielding against radioactivity.

In the past, spent fuel storage pools at reactors were usually built with a capacity of 1⅓ to 1⅔ cores, while over a plant's useful lifetime 10 to 13 cores are expected to be discharged. The small capacity was appropriate when it was assumed the spent fuel would frequently be removed and shipped to a reprocessing plant for recovery of usable fuel and separation of waste. The reactor storage pool was designed for use as a very short-term holding facility prior to shipment of spent fuel to a reprocessing plant.

By 1975 it became clear that since no reprocessing plants were operational, fuel might then begin backing up at reactors to the point that continued reactor operation would be threatened (ERDA-33, pp. 21-22; Assembly Comm. Hearings, pp. 94-95).

3.2.2 *Effect on LWR Reliability*

The accumulation of spent fuel in reactor storage pools may limit continued reactor operations in one of two ways. First, there are complications in the loss of full core discharge capacity (FCDC). Approximately every ten years the NRC requires PWR operators to inspect their reactor pressure vessels. (See Utilities Position Statement, p. IV-19) Unanticipated inspections may also be necessary. This requires unloading of the reactor to conduct the inspection, which in turn requires a full core's worth of storage capacity. There is some flexibility in scheduling the inspection or conducting it by remote methods that do not require core discharge. Loss of FCDC for any length of time could lead to a forced shutdown of the reactor, however, if it makes inspection impossible. Loss of FCDC could also lead to a loss of flexibility in the event of an accident necessitating discharge of a core. (Bridenbaugh Tr. 3/10/77, pp. 253-4)

NRC witness Carter indicated no accident sequence reviewed actually relies on existence of core-unloading capability (Tr. 3/10/77, p. 178), but such an accident cannot be precluded.

Second, loss of reload discharge capability (RDC) affects reliability even more directly. RDC refers to the ability to unload a portion of the core in order to refuel the reactor. If RDC is lost, refueling becomes impossible and the reactor must be shut down (AIF Study, p. 13).

3.2.3 *Projected Shortfalls*

Several reactors nationwide are faced with loss of full core reserve and possible shutdown unless action is taken promptly to provide more storage capacity. Two studies of the spent fuel storage situation were conducted during 1977. One, by a subcommittee of the Atomic Industrial Forum, concluded that between 10 and 28 reactors could lose RDC by 1986, while between 16 and 35 reactors could lose full core reserve (AIF Study, pp. 10-12). Another study performed for ERDA found that 1986 could see the loss of RDC at as many as 27 reactors, with loss of full core reserve for up to 54 (ERDA 77-25, pp. 7-8). The AIF study in particular emphasized the urgency of quick action to expand storage capacity and to provide adequate shipping capability. (AIF Study, pp. 21-22)

3.3 *The Legislative Response*

PRC Section 25524.1(b) attempts to secure assurances prior to plant certification that adequate capacity is expected to be available either through reprocessing or expanded storage to prevent shutdown of the reactor due to accumulating backlogs of spent fuel. It states:

> The commission shall further find on a case-by-case basis that facilities with adequate capacity to reprocess nuclear fuel rods from a certified nuclear facility or to

store such fuel if such storage is approved by an authorized agency of the United States are in actual operation or will be in operation at the time such nuclear facility requires such reprocessing or storage; provided, however, that such storage of fuel is in an offsite location to the extent necessary to provide continuous onsite full core reserve storage capacity.

The requirement for maintaining FCDC is conservative and assures that the reactor will not be shut down either for regulatory or logistic reasons. The Commission's final determinations will be made on a case-by-case basis, but the issues involved in assuring adequate storge [*sic*] capacity will be addressed generically in this report, and appropriate policy responses suggested.

3.4 *Options For Maintaining FCDC*

With reprocessing deferred for the indefinite future by the President and the termination of licensing proceedings on proposed reprocessing plants by the NRC, it appears very unlikely that adequate on-site storage capacity will be provided by reprocessing spent fuel. Therefore, our attention is focused on providing additional spent fuel storage on- or off-site.

Retrievability is desirable for any spent fuel storage option. This is because retrievability leaves open the possibility of reprocessing and recovery of usable fuel from the spent fuel should the current proliferation and safeguard difficulties with reprocessing be resolved. However, leaving open the option for eventual reprocessing also means the storage period is indefinite. It could be ten years; it could be fifty years or more, depending on the time required to come to a decision on reprocessing.

Three principal storage options are available: increasing pool storage capacity at the reactor site; providing off-site,

(away-from-reactor) interim retrievable storage, either in a surface facility or an underground geologic storage capacity; and terminal disposal. Of these options, the first is the surest and may be the only option for some time.

3.1.1 *Expanded On-Site Pool Storage*

Based on several years' experience with storage of spent fuel in water-cooled basins, this technology appears to be a practical method for storing fuel for 15-20 years and possibly longer. This conclusion is supported by a recent assessment of spent fuel storage experience performed for ERDA (BNWL 2256, p. 3), and by testimony from NRC Commissioner Gilinsky regarding the conclusions of the NRC in its forthcoming draft Environmental Impact Statement on spent fuel storage (Gilinsky, Tr. 1/31/77, p. 23).

Compared to the high temperature and harsh environment of the reactor core, there seem to be few corrosion or degradation mechanisms which will affect the integrity of the spent fuel in the water basin. This should be confirmed with exploratory sampling and examination of pool-stored fuel, however (BNWL-2256, p. 76). To date there has been little attempt to examine the condition of the fuel after extended pool storage (BNWL-2256, p. 3).

Pool storage requires active systems to remove radioactive materials from the pool water and the atmosphere of the storage building and cooling systems to remove the decay heat generated by the fuel (ERDA 76-43, pp.17.5-17.11; 17.27-17.30). These active systems require human surveillance and maintenance.

For longer periods—from 20 to 50 years—there is no experience with the stability of spent fuel. The longest storage time reported for zircaloy-clad fuel is 18 years (for one fuel element); for stainless steel-clad fuel the longest time is 12 years (BNWL-2256, pp. 14-15). Because of the lack

of detailed information on the status of fuel stored underwater for long times, corrosion mechanisms which may affect long-term integrity of spent fuel are not fully understood.

The long-term integrity of spent fuel in water storage has been an issue in the British proceeding considering expansion of the Windscale reprocessing facility. There, British Nuclear Fuels, Ltd. contends that spent fuel integrity in water basins cannot be assured for times greater than 10 years (BNWL Cost Assessment, App. 4). This conclusion, though, applies to the stainless-clad fuels used in the British ACR. High operating temperatures sensitize this cladding and lead to accelerated corrosion (Johnson, ANS Meeting).

The most common methods of increasing on-site storage capacity at existing pools are by reducing the spacing between fuel assemblies ("dense racks") or adding new racks in an unused portion of the pool. (Rubinstein Tr. 3/10/77, pp. 62-65) Questions have been raised specifically about the installation and use of dense racks, principally concerning safety margins for pool structures under increased weights of fuel, heating rates in the event of a loss of pool coolant, and the increased potential for handling accidents (Bridenbaugh Tr. 3/10/77, pp. 253-254). The mechanical and criticality factors were stated to be "well understood" by Nuclear Services Corp. witness Rubinstein (Tr. 3/10/77, p. 218-219) but detailed standards have not yet been promulgated by NRC. However, the NRC has received over 40 applications for dense racks and new racks, and 18 have been approved (as of September 1977).

Utilities would also have the option of building additional pools on-site. A topical report on a standardized independent fuel storage facility to be built at a reactor site has been filed with the NRC (SWECO-7601). However, no utility has yet announced plans to construct such a facility.

The issue of increased vulnerability to sabotage at storage pools containing large quantities of fuel was raised in the Commission's hearings. (Bridenbaugh Tr. 3/10/77, pp. 261-262) While the spent fuel pool may be relatively vulnerable to sabotage and such an attempt could cause considerable damage at the reactor site, it appears that off-site releases would be small (Chester Tr. 6/16/77, pp. 166-169).

Reactor storage pools have not been designed to store spent fuel for extended periods. Nevertheless, the designs are conservative, the re-racking involves no new technology, the NRC is apparently willing to license re-racking, and the equipment is currently available. NRC is currently preparing a generic environmental impact statement on spent fuel storage which will consider factors affecting the safety of extended storage and dense rack designs. (Bernero Tr. 3/10/77, pp. 169-170) The first draft of that statement is now scheduled for release in late January 1978 (Nucl. Week, 12/22/77, p. 2). Once the final version of that statement is approved, the technologies for extended storage and for expanded reactor-site storage can be considered to be available.

3.4.2 *Retrievable Away-From-Reactor (AFR) Storage*

An off-site, or away-from-reactor (AFR), spent fuel storage facility offers an alternative to expansion of existing reactor-site storage pool capacity. Three types of retrievable AFR storage are under consideration:

1. Independent spent fuel storage pools
2. Surface or near-surface dry storage
3. Retrievable storage in a geologic repository.

3.4.2.1 *Independent Spent Fuel Storage Pools*

There are currently three civilian facilities capable of storing spent fuel: the NFS site in West Valley, New York; GE's Morris Operation in Morris, Illinois; and the AGNS

plant in Barnwell, South Carolina. All were originally intended to serve as receiving bays for reprocessing plants. The pool at NFS held 165 metric tons as of July 1977 (Nuclear Assurance Corp.). The GE Morris Operation is storing 302 metric tons. The total capacity of 700 metric tons is expected to be reached by about 1980. The AGNS plant has not been issued a license for the receipt and storage of irradiated commercial nuclear fuel (JPL, p. 6-22).

The technology for storage of spent fuel in large AFR pools is basically similar to that for reactor-site pool storage.

We understand from contacts with the NRC staff that 10 CFR Part 72 is currently being written to provide standards for independent spent fuel storage installations. Regulatory Guide 3.24 is being revised to incorporate these new regulations.

3.4.2.2 *Dry Surface Storage*

An alternative to water-cooled storage of spent fuel is dry surface or near-surface storage. These technologies are being developed as part of DOE's SURFF (Spent Unreprocessed Fuel Facility) program. Three dry storage concepts are given the greatest attention: The sealed storage cask, the near-surface heat sink, and the air-cooled vault. The SURFF program is currently evaluating these concepts in order to choose one for further development; more detailed design and testing of one or more concepts will take place in late 1978 through 1982 (Turner Tr. 10/12/77, pp. 129-130; ERDA 76-43, pp. 17.5-17.35).

The advantage of the general concept is that containment and cooling can be provided with passive, low-maintenance systems. (ERDA 76-43, pp. 17.17-17.44) One of the SURFF design criteria is to provide containment for a min-

imum of 25 years. (Tr. 10/12/77, p. 123). If the technology is pursued, operating facilities could be available in 1985 (Tr. 10/12/77, pp. 128-131).

3.4.2.3 *Retrievable Storage in a Geologic Repository*

Spent fuel might also be stored retrievably in a geologic repository. With recent shifts in reprocessing policy this possibility has received greater attention. Ongoing studies at Sandia Laboratories and through the Office of Waste Isolation include consideration of the constraints that retrievability places upon the design and operation of a geologic repository (Tr. 10/27/77, pp. 108-109, 134 Tr. 10/21/77, pp. 167-168, 172-173).

Requiring retrievability places constraints on repository design and on emplacement techniques. Under the thermal load of spent fuel, salt caverns could deform and close up, restricting access to the stored fuel. For example, reducing the thermal loading, providing ventilation, or mechanically maintaining room size are some of the methods proposed to maintain retrievability (Tr. 10/27/77, p. 134). Special retrieval systems and corrosion-resistant overpacks would also be needed (Tr. 10/27/77, p. 134, APS VII-17).

Previous geologic repository concepts (for solidified reprocessing wastes) called for an initial phase of retrievable operation. The problem now is to assure retrievability for a different material—spent fuel—and for a longer time period, perhaps 25 years (Spent Fuel Briefing 10/26/77, p. 33).

This approach is to be the cornerstone of the recently-proposed DOE spent fuel policy. One of the most attractive features of geologic storage is that if the decision is ultimately made not to reprocess, then the facility can be backfilled and sealed as a disposal site, and an additional handling step is avoided (Spent Fuel Briefing, p. 13).

3.4.3 *Geologic Disposal of Spent Fuel*

Terminal disposal of spent fuel is similar in concept to disposal of solidified reprocessing wastes. However, the actinide content of the spent fuel results in a much greater time-integrated thermal output compared to reprocessing wastes (NRC Responses, pp.7-135 to 7-136). Consequently, design changes, such as reduced thermal placement density of the canisters, are required. (NRC Responses, p. 7-135). The implications of spent fuel as a waste form for repository performance and isolation are currently being evaluated (Y/OWI/INF-3/12, p. 17). For now, the emphasis is on *retrievable* geologic storage, since the decision on reprocessing has not been made.

3.5 *Prospective Availability of Alternative Storage Options*

On October 18, 1977, DOE announced a new policy of accepting spent fuel from utilities for storage after payment of a one-time fee in order to limit the problem of accumulating fuel which threatens reactor operations. (Spent Fuel Briefing) However, DOE currently has no facilities to store the fuel. The new policy is predicated on the belief that facilities could be made available when needed. The government's announced goal is to provide new storage capacity by 1983 or 1984. This is reflected in the proposed five-year advance notification a utility must give before DOE accepts the fuel. (Spent Fuel Briefing, p. 32) However, the realities of the current situation may interfere with that goal.

Currently, the DOE is soliciting expressions of interest in its proposed plan—both from utilities who may wish to surrender their fuel and from others who may wish to provide storage facilities (Spent Fuel Briefing, pp. 7-8). The eventual goal is to store the spent fuel retrievably in a deep

geologic repository (Spent Fuel Briefing p. 16). Because such facilities will not be available before the mid-to-late 1980's, the DOE plan also calls for interim surface storage, probably in water cooled basins. SURFF concepts for air-cooled vaults, sealed storage casks, or caissons at the surface would be used only if exceptional difficulties are encountered in providing a deep geologic facility (Spent Fuel Briefing, pp. 27-28). The key to the success of the policy is, therefore, how the interim storage will be provided and when the geologic facility will be ready.

The three alternatives for DOE to provide interim storage are (Spent Fuel Briefing, pp. 10-11):

1. Attempt to lease space in private facilities.
2. Contract for new facilities to be built by the private sector if space is not available for lease.
3. Have the government build storage facilities at an existing federal site if the private sector is not willing to build under contract.

The first option is in doubt, since there are no current plans for the private sector to add new capacity. General Electric has applied to the NRC to expand the licensed capacity at the Morris, Illinois, facility from 750 MT to 1700 MT, but the schedule for the expansion has been delayed by two factors. First, the State of Illinois has intervened on the grounds that NRC may not approve the expansion without a full environmental review and completion of the spent fuel storage Environmental Impact Statement (Ill. Petition). Second, GE has requested suspension of licensing hearings indefinitely until the uncertainties created for GE and its partner utilities by the new DOE spent fuel policy have been clarified (GE Motion). This could result in a delay of several months as DOE works out the details of its program. In effect, the DOE policy has had

the opposite of its intended impact by delaying the only current plans for AFR fuel storage expansion.

Exxon Nuclear had applied for permission to build a large (7000 MT) storage pool in conjunction with a reprocessing plant. However, that application has now been terminated by NRC and it appears that Exxon is unwilling to build the storage facility alone (NRC Order).

The storage pools at AGNS or NFS could possibly be expanded and leased, but there has been no suggestion from the operators of those facilities that they are interested.

Moreover, any expansion of a dormant facility or construction of new ones (if DOE can convince the private sector to proceed) will involve a licensing and construction delay on the order of six years, according to an AIF subcommittee (AIF Study, p. 21).

If space is not available through the private sector, the DOE policy calls for the government to assure storage capacity either by contract-supported private industry construction or by the Government building a facility itself. If this course is taken, the interim facilities would likely not be available until after 1985 for five reasons:

1. A government decision to build water basins would not be taken until private avenues are exhausted, suggesting a starting date no earlier than the end of 1978 or 1979.
2. Congressional approval would be required, at least for funding if not for the overall implementation of the plan, and that action may take one to two years.
3. Full NRC licensure of the facility would probably be required by DOE agreement (Nucl. Week, Dec. 15) or Congressional action, translating to a 12-18 month construction license review.

4. NEPA requirements must be met. DOE plans a GEIS on the program for release in draft early in 1978. Site-specific impact statements will also be required for individual facilities (Spent Fuel Briefing, pp. 23-25).
5. DOE estimates construction itself would take five years (Tr. 10/26/77, p. 46).

The upshot of these factors is that 1985 is about the earliest date such a facility could be in operation. If any snags are encountered, the date could slip further toward 1990. It is projected that a geologic retrievable storage facility could be operational around 1990, after a five-year pilot or experimental phase initiated in 1985 (Tr. 3/21/77, p. 713). Therefore, the new spent fuel policy does not provide a reliable alternative for increasing storage capacity.

3.6 *The Prudent Option-Increased Onsite Storage*

Since there is no assurance any of these AFR facilities will be available when needed, or that the DOE policy will be approved by Congress, the only prudent choice is to increase storage at the reactor. There are a number of reasons why accumulating spent fuel at each reactor is a less than optimal solution to the problem, however:

1. The cost is relatively open-ended, since there is no assurance the fuel will in fact be transferred to a repository or to a reprocessor. Reducing the cost uncertainty is one of the chief attractions of the DOE spent fuel policy. The "one-time" fee would relieve the utility of dealing with storage cost of unknown size.
2. Multiple sites. Each reactor would become an extended storage site, raising questions of extra costs and safety.

3. Surveillance and maintenance is required on a continuing basis. Pool cooling and cleanup will require periodic human intervention for an indefinite period.
4. Ultimate responsibility. A utility, not wishing to keep indefinite watch over the spent fuel at an abandoned reactor, might give up responsibility to the state or federal government, which in turn may be unprepared to deal with the situation.

Nevertheless, since on-site storage seems to be the solution chosen by inertia, it is reasonable to examine what could be done to mitigate any adverse consequences.

3.7 *The Outlook for California*

In California, the spent fuel storage problem falls most heavily on existing reactors. New reactors can incorporate added capacity in their original design (Table 1, Utilities' Position Statement, p. IV-15).

California reactors currently operating or under construction may begin to lose full core discharge capability early in the 1980's. Utilities have made plans to extend storage capacity in several ways (Arenal Tr. 3/10/77, pp. 205-207):

- If PG&E is allowed to restart its Humboldt Bay #3 reactor, it will apply for re-licensing of 150 currently unused fuel assembly spaces in the spent fuel pool. This would provide storage sufficient to maintain a full core reserve until 1984.
- SCE will ship 357 fuel assemblies from the San Onofre 1 reactor to the GE Morris storage site, allowing a full core reserve until late 1982. After that time, SCE expects to store excess fuel in the pool at San Onofre 2 assuming that pool is licensed in time (Nuclear Assurance Corp., pp. 3-7).

- SMUD has installed new high-density racks at Rancho Seco. These will allow storage of spent fuel at the reactor site until late 1984.

Currently operating California reactors therefore have five to seven years in which to plan and provide additional spent fuel storage capacity. By then the utilities must provide for: expansion (or further expansion) of capacity of existing pools, construction of new on-site facilities, or shipment to an away-from-reactor (AFR) storage facility if such is available.

New reactors—those planned or under construction—are incorporating much more storage capacity than was provided for existing reactors. PG&E plans to install expanded storage racks for Diablo Canyon 1 and 2 that will permit maintenance of a full core reserve until after 1990 (3 cores). (Nuclear Assurance Corp., pp. 3-57, 3-58) Plans for San Onofre 2 and 3 call for storage pool capacities that will permit full core discharge until 1988-89, and additional expansion under review would permit storage until after 1990 (3⅔ cores). The Sundesert Project, too, would provide enough storage space to maintain discharge capacity until 1994 (3⅔ cores). (Arenal Tr. 3/10/77, pp. 205-207)

If all these actions are taken, and the Sundesert Project (1 unit) is approved, the state by 1990 would have approximately 1700 metric tons of fuel in storage or nearly 70 times what is stored now.

3.8 *Conclusions and Recommendations*

The Commission believes that on-site storage poses a number of safety problems and will pursue these with the NRC to work toward satisfactory resolution. In addition, spent fuel should be removed to a more secure location whenever feasible. Indefinite storage at California reactor sites is no solution to the nuclear waste problem. The pol-

icies proposed below would result in a lessening of the threat to continued operations and an ability to make affirmative findings on a case-by-case basis under Section 25524.1(b).

1. New nuclear plants should provide initially for sufficient storage to store all fuel discharged during ten years of operation and maintain full core reserve.
2. The pool should be designed so that fuel discharged during the first 20 years could be stored by adding sufficient rack capacity to the existing pool.
3. The spent fuel storage structures should be designed to allow doubling of the original capacity (a total of 40 years' storage) by construction of an additional pool.
4. The spent fuel storage facilities should be designed to provide safe storage for all fuel accumulated during the reactor lifetime for up to fifty years after plant shutdown.
5. The utility should present a spent fuel disposition plan at the time of certification, ensuring responsibility and care for any fuel left at the site, or a definite mechanism to remove the fuel from the site. A financing plan should be included.
6. The spent fuel storage capacity situation and the condition of spent fuel in storage basins should be reviewed by the utility every four years, and a full report submitted to the Commission.

SPENT FUEL REFERENCES

1. AIF Study
   Atomic Industrial Forum, Inc., Committee on Nuclear Fuel Cycle Services; Subcommittee on Spent Fuel Storage, *Spent Fuel Storage Study: 1976-1986* (April 1977).
2. APS
   American Physical Society, *Report to the American Physical Society by the Study Group on Nuclear Fuel Cycles and Waste Management*, July 1977.
3. Assembly Committee Hearings.
   California State Assembly Committee on Resources, Land Use, and Energy. *Hearings on Proposition 15, The Nuclear Initiative*, Vols. I-XVI, October 14, 1975 through May 14, 1976.
4. BNFL Cost Assessment
   BNFL Document No. 232, "A Cost Assessment of Alternative Methods of Dealing With Irradiated Oxide Fuel."
5. BNWL-2256
   Battelle Pacific Northwest Laboratories, *Behavior of Spent Fuel in Water Pool Storage* (BNWL-2256), September 1977.
6. ERDA-33
   U.S. ERDA. *Nuclear Fuel Cycle: A Report by the Fuel Cycle Task Force*. (ERDA-33), March 1975.
7. ERDA 76-43
   U.S. Energy Research and Development Administration, Report ERDA-76-43, *Alternatives for Managing Wastes from Reactors and Post Fission Operations in the LWR Fuel Cycle*, 1976.
8. ERDA-76/121
   U.S. ERDA, *Benefit Analysis of Reprocessing and*

Recycling Light Water Reactor Fuel. (ERDA-76/121), December, 1976.

9. ERDA 77-25
   U.S. ERDA, *LWR Spent Fuel Disposition Capabilities 1977-1986.* (ERDA-77-25), May 1977.
10. G.E. Motion
    General Electric Co., *Motion of General Electric Company to Suspend Indefinitely*, Docket No. 70-1308 before the U.S. Nuclear Regulatory Commission.
11. Ill. Petition
    Illinois Attorney General, *Petition for leave to Intervene and Request for Hearing*, Docket No. 70-1308 before the U.S. Nuclear Regulatory Commission, October 1977.
12. Johnson, ANS Meeting
    AB Johnson, "Spent Fuel Integrity in Water Pool Storage," presented at ANS Winter Meeting, San Francisco, December 1, 1977.
13. JPL
    Jet Propulsion Laboratory, *An Analysis of the Technical Status of High Level Radioactive Waste and Spent Fuel Management Systems* (JPL Pub. 77-69), prepared for CERCDC, December 1977.
14. NRC Order
    December 27, 1977 order by NRC terminating GESMO proceeding.
15. NRC Responses
    NRC responses to questions submitted for Docket RM-50-3, November 1977.
16. Nuclear Assurance Corp.
    Nuclear Assurance Corporation, for U.S. ERDA

(Savannah River), *U.S. and Non-U.S. Light Water Reactor Spent Fuel Storage*, July 1977.

17. Nucl. Week
McGraw-Hill Publishing Co., *Nucleonics Week*.

18. Spent Fuel Briefing
Department of Energy, transcript "Public Meeting, Spent Fuel Policy," October 26, 1977.

19. SWECO-7601
Stone and Webster Engineering Corporation, *Topical Report SWECO-7601: Independent Spent Fuel Storage Facility*, March 1977.

20. Utilities Position Statement
California Electric Utilities and Industry, *Summary Position Statement Regarding Nuclear Reprocessing and Waste Disposal, California Public Resources Code 25524.1 and 25524.2*, May 1977.

21. Y/OWI/INF-3/12
Office of Waste Isolation, *National Waste Terminal Storage Program Progress Report*, (Y/OWI/INF-3/12), September 1977.

SECTION 4.0: HIGH-LEVEL WASTE DISPOSAL

4.1 *Summary*

Cal. Pub. Res. Code Section 25524.2 conditions new nuclear plant construction in the state on assurances by the Commission that a high-level nuclear waste disposal technology has been demonstrated and approved by the appropriate federal agency. Based on a thorough review of the scientific and technical work to date, the Commission concludes that those findings cannot be made. While several concepts for waste disposal have been postulated, none have been confirmed to be feasible. Disposal in the seabed, in space or under polar ice sheets have been considered but rejected as mainline options due to substantial technical uncertainties.

Geologic disposal in mined cavities, principally rock salt, is the concept most extensively studied, but even its feasibility has not been confirmed. The development work on this concept has been focused on waste handling techniques and the collection of engineering data. The two major aspects which remain to be demonstrated are the capability to locate suitable sites with the desired geologic characteristics and the ability to confine the wastes for periods of hundreds to thousands of years.

Disposal in geologic formations has an intuitive appeal. It is postulated that the rock provides a stable, inert matrix, far removed from the biosphere and capable of confining the waste without the need for human intervention.

The question is whether these postulated features can in fact be achieved in a deliberate waste repository. The stability of geologic formations is one of the key features. There are many geologic formations millions of years old seemingly impervious to change. But nuclear waste cannot be instantaneously inserted into them. The action of delib-

erate emplacement disrupts qualities one desires from geologic disposal—absence of a route to the surface and relative inertness. Opening shafts and boreholes establishes a link to the surface and the biosphere. The waste itself is not in chemical or thermal equilibrium with the host rock, leading to possible driving forces for waste release. For example, the decay heat may make the rock swell and potentially buckle overlying strata or become fractured and create channels for water flow. Whether these disruptions will compromise the ability of a formation to contain waste must be tested thoroughly. The confirmation of the concept comes in being able to (1) *find the right setting* and (2) *verify that the necessary features exist* and are sufficient to assure isolation.

In order to have a geologic respository with all the desirable or necessary features, one is dependent on nature to have accumulated the proper circumstances in one location and on one's ability to find those locations. One is not able specifically to engineer the conditions as one would in building a surface facility. Therefore, finding the suitable geologic setting is the equivalent of being able to build a piece of equipment which will function as intended. Finding these suitable conditions and checking other features would not seem to be an overwhelming problem. Nevertheless, five prior attempts to develop the means to dispose of wastes have failed due to unanticipated problems:

1. Liquid injection into deep formations was abandoned when geologic uncertainties were encountered.
2. Dumping self-boiling liquid wastes into a solution-mined salt cavity was abandoned due to geologic and safety problems.
3. Two related proposals to dispose of wastes in the bedrock beneath the Savannah River plant were

abandoned due to skepticism expressed by the National Academy of Sciences on the uncertainties involved.

4. A proposal to develop a repository in salt near Lyons, Kansas, was abandoned when a nearby solution mining operation was identified and when doubts about the ability to plug numerous existing boreholes developed.
5. A repository pilot plant site was tentatively selected in a salt formation in New Mexico but then had to be relocated when an unpredicted distortion of the salt bed containing pressurized gases and brine was uncovered.

Therefore, proving the geologic disposal concept to date has not been a trivial task and it has not been accomplished despite these attempts. Placing wastes in a geologic formation is entrusting the isolation to survive large natural forces over which we have no control — climatic changes, earthquakes, tectonic movements, vulcanism. We must be equally confident by thorough evaluation that isolation will be assured even under these extreme, but plausible, natural events.

The approach in utilizing a geologic formation for ultimate disposal is to select a setting which would be either resilient or resistant to disruption and to avoid circumstances which may compromise isolation (e.g., seismically active areas, porous media, fractured rock).

The major features on which isolation in a geologic formation depends are:

1. Absence of circulating groundwater.
2. Seismic and tectonic stability.
3. Manageable thermal, chemical, and physical effects of the waste on the host rock.

4. The resistance of the waste form to dissolution.
5. The structural integrity of the formation.
6. The presence of surrounding strata which can retain or "hold-up" any waste radionuclides released in the event of a disruption.
7. The ability to reseal adequately all the deliberate penetrations into the formation in order to cut off pathways to the surface.

Based on the statements of people directly associated with developing the geologic isolation concept there remain many serious deficiencies in the understanding of relevant subsurface physical and chemical processes which must be resolved by scientific evidence before the feasibility of the concept can be verified. Confirming that the seven features together will result in adequate containment of the waste will require additional testing, evidence, and probably the use of a mathematical simulation to aid in analyzing the response of the repository to various failure conditions. In order to be valid, however, these simulations must be checked against controlled experiments to ensure that the simulation reproduces the behavior of an actual geologic setting. These simulations have not yet progressed to this validation stage, however.

Due to the complexity of the interactions, a series of *in situ*, large-scale tests is essential in order to check for any responses or reactions that have been overlooked or are unanticipated. A series of laboratory tests alone is not sufficient.

A major conceptual difficulty in locating a suitable site is that specific criteria have not been agreed upon or adopted for the characteristics sought in a geologic formation. The list must reflect the conditions needed to obtain the required performance and these conditions will not be known until

more testing is done as noted above. Furthermore, verifying that the right set of conditions exists in a location will require entering the formation. Only limited information can be obtained from surface measurements and borehole tests. Therefore, we will not know that nature has provided the desirable conditions until we define what they are. After they are defined, we will not know that we can find this set of conditions until the formation is opened up and explored.

Consequently, progress in the development of geologic disposal is dependent on evidence gathered from thorough testing and evaluation to fill gaps in our knowledge.

Project Salt Vault has been cited by some as the "demonstration" of the waste disposal technology. However, the project never conducted tests on many of the features for which information is essential. Therefore, it did not provide the needed confirmation. Similarly, evidence from the experiences at the Asse Mine waste burial site in Germany, the burial test of waste glass in Canada, and the data from the natural reactor at Oklo in Africa provide only limited information.

The only major experimental facility now planned is the Waste Isolation Pilot Plant and data will not be generated in this plant until after 1985. At a minimum, data from experiments in the Waste Isolation Pilot Plant will be essential to the confirmation of the geologic disposal concept.

We conclude that due to the failure to confirm the geologic disposal concept to date (that being the most advanced concept), a technology for the permanent and terminal disposal of high-level waste has not been developed and demonstrated.

Since no demonstration project now exists and the federal government has not even prepared relevant generic evaluations of the waste technology nor established regulatory

and safety criteria and standards, we conclude that federal approval has not been given.

We are concerned that the current federal program may be downplaying the role of experimental confirmation of the geologic disposal concept. While the federal program includes numerous technical investigations, the emphasis of the program is getting an actual repository in operation for accepting commercial wastes by the late 1980's. This emphasis stems from a policy set by President Ford in October 1976 rather than from an analysis of technological requirements and their achievability. Given past experiences and the current deficiencies in our knowledge, the feasibility of geologic disposal is uncertain. If more unanticipated problems arise, the earlier that is known, the better. All locations now under active consideration possess features which could disqualify them.

The current program seems to be proceeding too much on the faith that schedules will be kept and that the concept is feasible. Explicit *in situ* experimentation does not begin until 1985 at the earliest and then it will only emphasize thermal effects tests. We believe this program design will inhibit the thorough testing needed and will create incentives to ignore negative results. The program emphasizes engineering detail over scientific evaluation of the concept. We believe it is desirable to start early large *in situ* experiments in cavities destined solely for testing purposes and allowing maximum instrumentation. While each of these*in situ* experiments will necessarily involve site-specific geological conditions, much needed generic information on relative benefits of containment media and on desirable thermal and chemical configurations of the waste can be obtained only from such *in situ* experimentation. We understand the logic of proceeding with a full-scale licensure to force the entire governmental apparatus to begin dealing with the waste

disposal problem explicitly, but we believe the scientific method requires more testing before moving to actual repositories. Salt, for example, may not be the best medium. If it becomes clear that sufficient geologic uncertainties cannot be resolved, it may be prudent to move to a multiple barrier engineered system in a geologic formation where geology is *not* the principal barrier to waste release. Because, without this testing, the current program may be fairly risky and licensing may be delayed until more testing is done anyway, we believe the additional testing will not in fact delay the program. A federal program moving too fast to relieve public concerns and skipping essential testing involves the risk that the only waste management option left will be, by default, surface storage with continuous surveillance.

4.2 Introduction

Section 25524.2 of the Public Resources Code conditions certification of new nuclear plants on findings by the Commission "that there has been developed and that the United States through its authorized agency has approved and there exists a demonstrated technology means for the disposal of high-level nuclear waste."

Nuclear waste is a by-product of the fission process utilized in electric power production and in defense plant reactors to produce nuclear weapons material. The waste has been generated since the first reactors went critical in 1943. A variety of radionuclides are produced as a result of the processes within a nuclear reactor. These radionuclides have a radiotoxicity and in some cases a chemical toxicity. The radiotoxicity hazard of a radionuclide is a function of the type of radiation it emits, the energy of the radiation, and the rate of disintegration which releases the radiation. The radiotoxicity diminishes as the radionuclides decay to stable

nonradioactive elements. The rate of disintegration is expressed as the time required for half the original mass to decay — the half-life.

The radionuclides arise from two principal processes and it is important to distinguish them. The bulk of the radionuclides are formed by fission when uranium yields its binding energy to water. The fragments usually are intensely radioactive. The second process is the capture of a neutron, either immediately producing a radioactive element, or destabilizing a nucleus and resulting in a transmutation to another element which itself may be radioactive. Iron-55 and nickel-59 are created in the structural shell members of a reactor by "neutron-activation." Plutonium and higher "transuranic" elements (those with an atomic number greater than uranium, 92) are created by neutron capture(s) and subsequent beta decay to a new (radioactive) element. Some of the nuclides, particularly the fission products have very short half-lives — from seconds to days. The longer-lived nuclides, such as strontium-90, cesium-137, technetium-99, krypton-85, americium-241, and plutonium-239, present the principal waste problem.* The amount of toxic radionuclides generated from the fission process is so great, however, and the toxicity so high that the wastes cannot simply be dispersed. As Snow noted in 1967,

> It has been estimated that about five cubic miles of water would be required just to dilute the waste from one ton of fuel to the maximum permissible concentration (MPC) [a measure of the safe ingestion level].

---

*The term "high-level nuclear wastes" is defined by the Commission to mean basically high-hazard nuclear wastes of intense and persistent toxicity, including, *inter alia*, high-activity wastes from reprocessing plants, spent fuel rods, and transuranic contaminated wastes. Other wastes such as trapped fission product gases and long-lived nuclide-containing decommissioning wastes may also fit in this category. For a discussion see Appendix C.

> The time required for its longest-lived components, strontium-90 and samarium-151, to reach the MPC [by natural decay] is from 1000 to 1500 years [referencing Blomeke and Roberts, 1975, p. 156]. Release of this material directly to the environment is clearly impossible, so means must be found to store it safely. (Joel A. Snow, "Radioactive Waste From Reactors: The Problem That Won't Go Away", *SCIENCE & CITIZEN*, May 1967, p. 91.

Cohen, who in testimony was quite sanguine about waste toxicity, in a technical paper in 1977 expressed a view similar to Snow's:

> One way to grasp the potential hazard presented by this amount of gamma radiation [from the fission product wastes from one full year of a U.S. energy budget based on all-nuclear generation of electricity] is to consider what would happen if the source of radiation were to be distributed over the entire land surface of the U.S. The number of fatal cancers per year induced in that case could be as high as many millions. Clearly the material that gives rise to the radiation must be confined and handled with great care." (Bernard Cohen, "The Disposal of Radioactive Wastes From Fission Reactors," *Scientific American*, June 1977, p. 26)

Cohen goes on to comment on the persistence of the toxicity, based on an ingestion pathway:

> . . . if all the wastes [from one year of all-nuclear U.S. power production], after aging for 10,000 years, were to be converted into digestible form and fed to people, one could expect a million fatal cancers to ensue. . . . Feeding all that radioactive material to people is hardly a realistic scenario, however, so that one might consider instead the consequences if the wastes were to be dumped in soluble form at random into rivers

> throughout the U.S. For this scenario, which comes close to assuming the most careless credible handling of the disposal problem, . . . a million fatalities could result. It is unlikely that anyone would suggest such dumping, but in any event it is clearly not an acceptable method of disposal. (*Id.*, p. 26-27)

The search for a permanent disposal method has been underway since at least 1953, when one of the first articles was published on the subject. (L. P. Hatch, "Ultimate Disposal of Radioactive Wastes," *American Scientist* 41(3): 410-421, July 1953) Six disposal options have been proposed in the intervening period, but none have come to fruition.

1. *Liquid Waste injection into Porous Formations*

The first high-level wastes were reprocessing wastes from weapons-grade plutonium production. A reasonable approach was thought to be to dispose of these wastes by injecting them into deep permeable formations. (ORNL-4555, pp. 1-2) To implement this suggestion, data on sedimentary basins were collected to aid in selecting the ten basins with the highest potential as repositories. However, a report in 1956 identified geochemical and geophysical problems. (DeBuchananne, Tr. 3/22/77, p. 31) In addition, the poorly understood hydrodynamic flow characteristics of deep basins made the deep well injection concept unattractive. (*Id.*) Because of these problems, a 1957 NAS report listed waste disposal in porous beds as a possibility for the distant future because of a lack of understanding of complex chemical interactions that could cause rock pore plugging. (NAS 1957, p. 6) In 1966 deep-well injection was suggested only for the disposal of low- and intermediate-level wastes and not for high-level

wastes. (NAS 1966, pp. 53-54) The reality of geologic conditions and uncertainties therefore reduced the attractiveness of this early proposal.

2. *Boiling Liquid Wastes in a Salt Cavity*

Until approximately 1961 the waste disposal effort focused on disposal of *liquid* wastes in salt because high-level waste solidification was just getting started. (Lieberman, Tr. 3/24/77, p. 398) In 1959 the AEC proposed its first full-scale waste repository in the Hutchinson salt formation of Kansas. (AEC Authorizing Legislation - FY 1972 Hearings, p. 1314) AEC proposed that boiling liquid radioactive waste be poured into an excavated salt vault. (*Id.*) The vapors were to be cooled at the surface in a tube and then returned to the vault — like a giant moonshiner's still. (*Id.* Besides geologic problems at the site, there was an obviously serious transportation problem of potential accidents in bringing the boiling and highly toxic wastes to the site. Congressional pressure forced AEC to abandon this idea in 1961. (Brown, 1971, p. 713)

3. *The Lyons Repository*

Project Salt Vault was designed in 1962 and 1963 as a feasibility study of using salt for radioactive waste disposal. (ORNL-4555, p. 2) The results of this program led to analysis of the feasibility of establishing an actual repository. (Lieberman, Tr. 3/21/77, pp. 398-399) The Lyons site was tentatively selected as a repository site in June 1970. (Tr. 10/27/77, p. 51a) A final environmental statement in 1971 asserted that "[b]y establishing this facility, radioactive wastes . . . *will be permanently isolated from man's biosphere*, thus providing a direct and lasting benefit to the environment." (WASH-1503, p. 2, emphasis added; the announcement of the selection

of the site near Lyons as a repository was made in AEC Press Release N-102, June 17, 1976, quoted in ORNL 4855, p. 356) There can be no doubt that the Lyons site was intended to be a permanent waste repository; a position that was adopted after approximately ten years of experimentation at the site.

Subsequent studies identified a number of exploratory oil and gas wells in the site vicinity and a nearby solution salt mining operation. (Lieberman, Tr. 3/21/77, p. 399) The inability to seal these boreholes and the proximity of the solution mining resulted in a withdrawal from the Lyons site in 1972.* (Weart, Tr. 10/27/77, pp. 56, 59; Deju, Tr. 10/11/77, p. 10)

4. *Project Bedrock*

A proposal to construct bedrock storage facilities for high-level liquid wastes from the Savannah River Plant was submitted to the AEC in 1958. (NAS 1966, p. 4) This proposal probably resulted from a 1951 USGS suggestion that bedrock might be suitable for this purpose. (NAS 1972, p. 7) The NAS Committee reviewed the plan in 1960, and, recognizing the possible need for sealing the formation in order to prevent seepage from the vault, recommended that the project be reconsidered after evaluation of formation hydrology, fracture con-

---

*In 1971 the American Salt Company wrote a letter to the AEC expressing concern about the presence of water near the Lyons site. A company spokesman told the *Denver Post* that his company "had been injecting water into the formation for fifty years; as we remove salt, the water replaces the salt." (*Denver Post*, September 28, 1971, p. 51) In October 1971 an AEC staff report revealed that tunnels of the company's mine came as close as 500 yards to the proposed repository. The report said: "In the course of drilling small holes . . . water started leaking into the mine" because one of the many gas or oil boreholes in the area had been intercepted. (*Atomic Energy Clearing House Reports*, October 4, 1971, p. 3) "Water and mud came spurting out" but there was no record of a well nearby. (*Id.*)

tent, and the physical and chemical properties of the rocks. (NAS 1966, p. 4) Extensive investigations were performed, but the NAS Committee found in 1966 that numerous uncertainties still remained that could be resolved only by several more years of *in situ* testing. They recommended that investigations toward bedrock disposal at SRP be discontinued because neither the SRP nor any other AEC installation was located above a geologically acceptable formation. (NAS 1966, pp. 4 and 73-75)

The AEC was determined not to accept NAS's recommendation to abandon Project Bedrock. In 1969 another proposal was made which the NAS Committee reviewed in 1972. The proposal was to dispose of radioactive liquid wastes in vaults excavated in either crystalline metamorphic rock or impermeable sedimentary rock at a depth of 1500 to 1900 feet below the surface. That is, the wastes would not be injected into a porous formation but rather would be pumped into long tunnels sealed by concrete bulkheads. (NAS 1972, pp. 8, 59) This time the Committee concluded that there was reasonable prospect of achieving containment of the wastes and isolation from the biosphere. They also concluded "that no reasonable amount of exploration from the land surface can conclusively demonstrate the safety of waste storage in deep vaults. *Essential for such a demonstration is in situ inspection and testing* of the rocks in which vaults might be constructed." (*Id.*, pp. 3-4, emphasis added)

The early skepticism of the NAS was borne out. In October 1972, further exploratory drilling and development of the bedrock concept was deferred indefinitely in favor of an evaluation of alternatives. The environmental statement on the bedrock concept had been with-

drawn earlier in June 1972. (Lieberman, Tr. 3/24/77, p. 444) Project Bedrock was abandoned because of possible breakthrough into the Tuscaloosa Formation (Dole, Tr. 3/21/77, p. 44), a prolific freshwater aquifer. (NAS, 1972, p. 17)

5. *The Retrievable Surface Storage Facility*

After the difficulties at Lyons, the AEC on May 18, 1972 proposed that a Retrievable Surface Storage Facility (RSSF) be constructed to store commercial and military high-level wastes for an extended period — perhaps in excess of 100 years. ("AEC Shifts to Surface Engineered Waste Storage Facilities", *Nuclear Industry*, May 1972, p. 25) During that time the AEC predicted the remaining questions concerning geological disposal could be resolved. (*Id.*) The choice of the RSSF over geologic disposal was due to the lack of an approved geologic site. (WASH 1539, p. 5.5-2) The RSSF was to consist of one of three concepts: (1) Storage in water-cooled basins, (2) storage in air-cooled concrete vaults, (3) storage in air-cooled 35-ton sealed casks. (WASH-1539, pp. 1.2-15, 16) The RSSF was itself a resurrection of an early concept dropped by the AEC in the late-1950's because it was considered "a safe but temporizing solution requiring active surveillance." (*Science 182:* 1207, 1975) The EPA in commenting on the RSSF EIS was concerned that the AEC's concentration on the RSSF concept indicated a change in AEC's attention from the primary goal of finding an ultimate disposal method to the secondary goal of finding an interim storage method (JPL Report, p. 6-45 referencing EPA response to Draft WASH-1539, November 15, 1974). Soon after ERDA was formed, the new Administrator Robert Seamans withdrew the concept. (Letter

from R. C. Seamans, Jr., to Hon. John O. Pastore, April 1975.) Instead, ERDA reinstated the funding in the FY 1976 budget for a pilot plant in a salt formation in New Mexico. (*ERDA Authorizing Legislation, Fiscal Year, Hearings*, p. 1262.) In the FY 1977 budget, ERDA proposed doubling funding for the geologic disposal program. (*ERDA Authorizing Legislation, Fiscal Year 1977, Hearings*, p. 1432.) In proposing the increased funding, Dr. Richard Roberts stated:

> Heightened public interest and concern clearly demonstrate an increased need to satisfy the American people that the Government is dedicated to arriving at a safe solution for the management of radioactive wastes on a more accelerated basis. (*Id.* at 1433).

6. *The Carlsbad, New Mexico, Site*

Regional studies of salt deposits in the late 1950's and early 1960's identified the Permian Basin salt deposits as a potential repository location. (DeBuchananne, Tr. 3/21/77, p. 31) When Oak Ridge National Laboratory was forced to abandon the Lyons, Kansas, site in 1972, they examined other locations. In 1973 they selected the Delaware Basin in southeast New Mexico as being most promising. In 1974 Oak Ridge drilled two exploratory holes. The program was suspended until 1975. (Weart, Tr. 10/27/77, p. 52)

When Sandia Laboratories took over the program in 1975 after ERDA reinstated funding, they drilled a third hole which struck an unpredicted distortion of a geologic bed which contained pressurized gases and brine just below the salt formation. (Lieberman, Tr. 3/21/77, p. 416) Because of these unpredicted geological conditions, the study site was moved several miles away to

avoid an anomalous geologic feature. (Id., p. 416; Weart, Tr. 10/27/77, pp. 57-60) This new site is now being developed as the Waste Isolation Pilot Plant (WIPP).

Now, according to an article by members of the NRC staff:

> The failure of the Federal Government to produce and to demonstrate effective and viable waste management techniques, coupled with the public's apprehensions and misconceptions regarding the danger and difficulty involved in managing nuclear waste have made the safe management of nuclear waste one of the pivotal issues affecting the future use of nuclear power. (Bishop, *et al.* 1976, p. 1)

In testimony before the Commission, Kasperson, a survey researcher, listed nuclear waste disposal as the area of most concern to the public regarding nuclear power. (Tr. 5/26/77, pp. 50-51) Slovic added in testimony that nuclear power evokes particularly strong reactions of dread and fear on the part of the public, adding to the negative perception. (Tr. 5/27/77, p. 180)

The federal government has recently dramatically stepped up its funding of waste disposal programs (JPL/OSTP, p. 20) and has devoted more management attention to the problem in the last two years.

4.3 *Existence of a Demonstrated, Developed High-Level Waste Disposal Technology*

The failure to dispose of wastes through the proposals which have been put forward over the last 25 years is in large part due to unanticipated technical problems which compromised the ability to *isolate* the waste from the biosphere.

The ultimate purpose of a waste disposal technology is to confine and isolate emplaced wastes from the biosphere for long periods, hundreds or thousands of years. Complete containment is not necessarily required, but elimination of contact with the biosphere is necessary. (APS, p. VII-32) There is dispute as to how long this confinement must be maintained. Periods of 1,000 to 1,000,000 years are proposed.* The APS study concludes that no rules of thumb on the number of years are "meaningful criteria" but does not propose any period of isolation it considers appropriate. (*Id.*, pp. VII-11, 12) Presumably, some isolation criterion is under development by NRC.

The isolation of waste as the primary purpose of disposal is clearly envisioned in the PRC Section 25524.2(c) statement: "As used in this section 'technology or means for the disposal of high-level nuclear waste' means a method for the *permanent and terminal* disposition of high-level nuclear waste" (emphasis added).**

---

*Examples of various proposals are given in a 1977 APS study. One proposition is that of Willrich, et al. (1976): "because the [ingestion] waste hazard index does not fall below that of pitchblende [natural ore with 60% uranium] until about one million years, these [LWR] wastes . . . must be contained and isolated for as long as one million years." (APS, p. VII-11) Another rule of thumb is to allow for 10 half-lives of decay for a given radionuclide, or a reduction in radioactivity by a factor of 1024. However, the question then is: for which radionuclide is the rule to be applied — e.g., 10 half-lives of Pu-239 (244,000 years), of I-129 (1.7×10^8 years), or of Th-230 (8×10^5 years). (*Id.*, p. VII-12)

**However, the text further adds that such permanent and terminal disposition "shall not necessarily preclude the possibility of an approved process for retrieval of such waste." We do not believe the Legislature intended the phrase to include interim retrievable storage of wastes, such as the contemplated 25-year retrievable storage of spent fuel in a geologic repository. (DOE briefing, October 26, 1977) Otherwise, the "permanent and terminal disposition" aspect would not have been emphasized. As the APS study points out, "disposal" is logically inconsistent with this type of retrievability. (APS, VII-28) However, the APS study notes that deliberate retrieval of emplaced, *disposed* wastes is *possible* but difficult. (*Id.*) Therefore, we are persuaded that the intent of the phrase is to allow for the possibility of retrievability even in a permanent terminal *disposal* of wastes, consistent otherwise with long-term isolation, and that this possibility should not preclude a finding that the overall method is for permanent and terminal disposition.

4.3.1 *Disposal Alternatives Under Study*

Several concepts have been postulated to provide the required isolation; the current program is one of evaluating the feasibility of each option. While DOE has several methods for disposal under consideration, disposal on land in geologic formations is the approach currently most advanced and receiving the most attention. These options have been extensively discussed in ERDA-76-43 (TAD) and only a brief summary will be provided here.

1. *Ejection by Rocket*

Extra terrestrial disposal has been considered at a conceptual stage but certain problems exist: (1) cost would be high (Ford/MITRE, p. 256); (2) launch opportunities are limited for certain destinations (TAD, p. 26.2); (3) accidental destruction of the container during launch might distribute the payload over widespread areas in the atmosphere (Ford/MITRE, p. 256) or on land; and (4) the need for terrestrial disposal is not eliminated: due to weight and volume limitations, disposal would be limited to a fraction of the wastes, i.e., the long-lived transuranics. (Ford/MITRE, p. 256; TAD, p. 26.3) Currently, the state-of-the-art in waste partitioning is such that sufficient removal of actinides is in doubt, and significant amounts of these substances could remain in the waste left on earth, resulting in only a marginal reduction in the required isolation period. (For a discussion of problems in waste partitioning, see R. Leuze and W. Bond, "Status of Reprocessing Methods for Actinide Partitioning," *Proceedings of the Conference on the Management of Radioactive Waste: Waste Partitioning as an Alternative*, Seattle, Washington, June 8-10, 1976, at 133.)

2. *Disposal in Geologic Formations of the Seabed*

Disposal in the stable deep seabeds or in large marine sediment deposits in the ocean is being researched at Sandia Laboratories. Potential advantages or ocean disposal include: (1) slow advection of soluble material through sediments; (2) sediment ion exchange processes to trap any released waste; and (3) low tidal currents to slow transport of nuclides (see Bishop and Hollister, "Seabed Disposal—Where to Look," Nuclear Technology, December 1974, at 24). However, there is currently insufficient information to evaluate the seabed alternative which it still in the feasibility assessment stage (Anderson, Tr. 10/27/77, p. 174). Work is currently being done on examining the adequacy of postulated nuclide transport barriers (see *Id.*, p. 175).

3. *Ice Sheet Isolation*

Disposing of wastes beneath ice sheets in Greenland and Antarctica would rely on the existence of a massive physical barrier between the waste and the biosphere. Due to its emission of heat, radioactive waste placed in an ice sheet would melt its way to the bottom where it would likely be abraded by the movement of the ice sheet over the bed rock. Basic uncertainties exist concerning (1) thermal, chemical, physical and mechanical properties of large ice sheets; (2) the movement of ice, especially under the influence of heat from the waste (Ford/MITRE, p. 255; Angino, p. 889) which might eventually cause the waste to reappear at the edge of the ice sheet; (3) lack of information to evaluate the rock-ice interface; (Platt, Tr. 3/22/77, p. 78) and (4) inability to predict the stability of the ice sheet over long periods during which climatic change, such as glaciations and intervening warm melting periods, might occur. (*Id.*,

p. 78). There are also institutional problems with this approach, since Greenland belongs to Denmark and there is currently an international treaty forbidding the use of Antarctica for radioactive waste disposal.

4. *Superdeep Wells*

One additional method which has been considered is the emplacement of wastes (either liquid or solid) in very deep drillholes ranging from 10 to 20 thousand meters in depth. (TAD, p. 25.5) A facility would consist of a number of large diameter holes drilled into a thick sequence of rocks. The residual heat from fission product decay would melt adjacent portions of the rock and eventually the mass would solidify with the waste being incorporated into the rock.

One problem inherent with this method is that technology does not yet exist to drill large diameter holes to the required depths. (*Id.*) Thus, it is not considered a viable alternative concept at the present time. (*Id.*) The American Physical Society Study Group believes that this method may, however, be useful as a future alternative and has recommended research in the areas of rock melting and superdeep drilling technology. (APS, p. VII-67).

5. *Disposal in Continental Ceologic* [*sic!*] Formations

The disposal of high-level wastes in geologic repositories, i.e., in subsurface cavities (mines or vaults) in a deep stable geologic formation is receiving the most research attention. A major effort in the U.S. in this area is the National Waste Terminal Storage Program (NWTSP). (See "Waste Isolation in Geologic Formations in the United States," Tr. 3/21/77, p. 706). This program, which began in February 1976 (although geo-

logic disposal studies have been underway for about 20 years), has as its objective the provision of facilities in various geologic formations at multiple locations in the U.S. which will safely dispose of the commercial radioactive waste which must be delivered to a federal repository for terminal storage. (*Id.*) The NWTS Program was scheduled to provide six repositories, with the first two scheduled for initial receival of waste in 1985, the next two starting two years later, and the fifth and sixth starting at two-year intervals after the second set of two. (*Id.*, p. 712)

As part of the NWTS Program, four geologic media have been identified for evaluation of their suitability as radioactive waste receptacles: salt, argillaceous, crystalline, and carbonate rocks. (Y/OWI-8, p. 21) At present, the existing body of knowledge concerning salt is much greater than that for the other rock types (Y/OWI/TM-18/2, p. 2) and "generic studies of the physical, chemical, and geological characteristics of a variety of non-salt rock types are essential for evaluation of alternate geologic media for storage or disposal of radioactive wastes. . .the property or set of properties which determines the suitability of a given medium varies from one rock type to another." (*Id.*, p. 5)

Furthermore, the properties of the waste to be disposed must be considered in conjunction with the disposal medium.

> Maintaining options for retrieving spent fuel elements over an extended time represents a more challenging problem than the disposal of solidified, high-level radioactive waste. Also, the kind of geologic medium that would be suitable for storing full-length spent fuel elements may be different from a medium that would be suitable for solidified, canistered wastes. For ex-

ample, whereas salt is commonly regarded as a satisfactory medium for disposing of high-level wastes, it may be less desirable than a harder rock for retrievable storage of spent fuel elements because of the long-term deformation properties of salt. (*Id.*, p. 2-3)

Demonstration of Waste Disposal Technology

Previous sections have given a background on the disposal concepts under consideration. Because disposal in conventional mined cavities in geologic formations is the concept for which the most is known and is being emphasized in the current federal development program, only this concept will be evaluated according to the statutory tests. A basic conceptual framework will be established for the evaluation [*sic*] the general attractiveness of various rock types discussed.

In Appendix A a general definition for a developed, demonstrated technology is set forth based on a broad review of evidence:

A technology has been demonstrated and developed:

1. If it can achieve its intended purpose reliably, without offsetting disadvantages such as threats to safety, occupational health, environmental quality or national security.
2. If it can perform its function within prescribed safety exposure, safeguards and effluent limits.
3. If these qualities have been shown to be achievable through previous operation of the technology or through comprehensive testing at a pilot or prototype scale under conditions approximating those in actual use including abnormal, upset or unusual conditions.

When applied to geologic waste disposal technology, this definition requires elaboration. The demonstration of the disposal technology involves three components: (1) con-

struction of repositories; (2) handling and emplacement of wastes; and (3) isolation of the wastes from the biosphere for extended periods. The demonstration of the first two components is not trivial and is presently not at the same stage of advancement for the various geologic media under consideration. For example, seabed disposal, either with penetrometers or in subsurface vaults, is dependent on adequate development of repository and emplacement technologies. (Anderson, Tr. 10/27/77, pp. 165-168, 175) However, for granite and basalt media, the construction of repositories and emplacement of waste seems at least feasible. Project Salt Vault confirmed the feasibility of handling and emplacing waste in mined salt cavities at least on a limited scale (ORNL-4555). Further, there is broad experience in salt mining and hard rock mining which is adaptable to the construction of repositories. (Y/OWI/SUB-76) However, the primary remaining challenge of geologic disposal is the third component—isolation.*

Demonstration of a waste disposal technology demands much more than the burial of the waste in a geologic formation. One must assure isolation of radioactive waste from the biosphere to such an extent that resultant health effects from potential human exposure are acceptably low. It is the ability to dispose of wastes *safely* which needs confirmation. The National Academy of Sciences set a high standard for any waste disposal technology by stating: "Unlike the disposal of any other type of waste, the hazard related to radioactive wastes is so great that no element of doubt should

---

*The APS Study Group Report states that there is a "demonstrated technology" for geologic isolation but clearly refers to the mining and emplacement technologies, not to the demonstration of isolation: "Conventional mined cavities constitute the only deep continental geologic isolation concept based on a demonstrated technology for both the emplacement and retrieval of radioactive waste." (APS, p. VII-28)

be allowed to exist regarding safety." (NAS, 1957, p. 3) Again in 1966 the NAS stated: "We believe there should be no phenomenon involved in any of the waste disposal schemes that is not completely understood." (NAS 1966, p. 20)

The experimental demonstration of isolation at a given site could be accomplished by emplacing waste in a geologic formation and observing the migration, if any, of the radioactive waste over centuries or millenia. Such real-time experiments are not possible. The Group of Experts of the Organization for Economic Cooperation and Development Nuclear Energy Agency regards shorter term experiments as demonstrations only of waste handling and emplacement techniques:

> The operation of a disposal facility in a geological formation, even for several decades, would essentially prove the feasibility of the emplacement concept and of waste handling techniques; it could not be considered as a sufficient demonstration of the long-term reliability of the waste isolation system. Such a demonstration is necessarily conceptual in nature and consists of showing that the more extreme environmental changes would not lead to hazardous consequences. (OECD, p. 67)

The object of the demonstration must be the same as that of an experimental demonstration of a technology; namely, a high degree of confidence that the technology will operate safely and as expected both under routine conditions and under upset or abnormal conditions.

4.3.3 *Postulated Attractive Features of Geologic Formations for Waste Isolation*

Depositing waste in a geologic formation has a certain intuitive appeal. Buried waste in a deep geologic formation would seem to be in a region in which change is very slow

and where there exist multiple barriers to any postulated release. Burial implies little chance of return to the surface. However, the basic problem is to confirm that these postulated features exist. Although the conceptually attractive characteristics have not been specifically enumerated either in submitted testimony or the literature, some of the attractive features appear to be:

1. For disposal at depths of several hundred meters, the rock overourden provides radiation shielding for biota.
2. Continued maintenance and human intervention in order to maintain isolation is not required beyond the operational phase.
3. Groundwater, which is the most significant route to the biosphere, is known to flow at low velocity in certain deep geologic formations. Other formations are essentially impermeable to circulating groundwater. Therefore, the disposed waste may be restricted from entering an easy pathway to the biosphere. If groundwater flow through a repository should occur during the post operational phase, the sorption properties of surrounding rocks may remove some or all of the radionuclides from the groundwater.
4. Engineered waste immobilization features, such as the incorporation of the waste into a waste form of relatively low leachability (e.g., glass or ceramic) or the installation of a secondary containment envelope can be incorporated into the operational strategy.

The objective of disposal is either to retain the waste where it is emplaced or to provide such a tortuous path to the biosphere that the radionuclides would either decay to

harmless levels or be absorbed on rock minerals along the path length. The question then becomes whether these desirable characteristics can be realized in a geologic formation and whether our knowledge is adequate to identify and utilize such desirable formations, assuming that they exist.

Natural salt formations have received much attention since they were favored in a 1957 National Academy of Sciences report from an advisory committee of geologists and geophysicists. (NAS, 1957, p. 1) Other rock types have been proposed as also being potentially acceptable. Each of the major geologic media has advantages and disadvantages. (See OECD, p. 53; JPL 77-69, pp. A-18 to 22) Therefore, scientific judgments ultimately will have to be made both as to acceptable rock type and also as to an acceptable geologic setting of that rock type. The various relevant features of rock types are described below:

1. *Salt Formations*

"Natural salt deposits occur as either undeformed bedded sedimentary formations or deformed in the various stages of diapirism typified by the salt domes of the Gulf Coast province. Early considerations of the advantageous attributes of salt as a medium for the disposal of radioactive waste did not distinguish between these two types of salt deposits." (Y/OWI-8, p. 25) Subsequent research and development has concentrated almost exclusively on the bedded type deposits "because of the anticipated difficulties in adequately demonstrating the tectonic. . .and hydrologic stability of dome, or diapiric, deposits." (*Id.*; p. 25).

Bedded salt deposits have been the subject of long-standing interest as sites for waste disposal because the very persistence of beds of highly water-soluble evaporites over long periods of geologic time indicates that

they have not been dissolved away by circulating groundwater. For example, bedded salt formations presently under consideration include those of Permian age (about 250 million years old).
(ORNL/TM-5764, p. 10-37)

Since the most important agent for dispersal of radionuclides from deeply buried wastes is circulating groundwater (Y/OWI/TM-18/1, p. 9), the interiors of bedded salt deposits appear to represent stable, dry geologic formations which may be suitable for the long-term isolation of radioactive wastes.

Advantages of salt were recognized as early as 1957 by the advisory committee of the National Academy of Sciences which called disposal in salt "the possibility promising the most practical immediate solution of the problem." (NAS 1957, p. 1) However, this suggestion was made "in advance of research and development having been done to determine many scientific, engineering, and economic factors and, in the absence of essential data, represents considered judgments subject to verification" (*Id.*). Later review by the NAS Committee continued to endorse salt as a potential disposal medium. (Y/OWI/SUB-3745/4, p. 5 and NAS 1966, p. 23) Currently, the first two NWTS repositories are to be in salt formations. Most of the data that have been collected are related to disposal in salt (Y/OWI/TM-25, p. 2) and it is considered by some to be "the most consistently promising medium." (Y/OWI/SUB-3745/4, p. 10).

Salt deposits have thus been examined most extensively because they have a number of advantageous properties which have been postulated to improve the effectiveness of waste isolation.

Several advantages of salt have been noted (Lieberman, Tr., 3/21/77, pp. 27, 77-78; Zerby, Tr. 3/21/77, p. 220; ORNL-4555, p. 317; Y/OWI/SUB-3745/4, p. 10):

a. Salt formations are known which have remained isolated from circulatory groundwater for long periods; some, such as those of Permian age, are about 250 million years old, and their very existence implies that they have been protected from solution by circulating groundwaters.

b. Salt formations are essentially impermeable, and some are relatively homogeneous.

c. Salt has the ability to flow plastically under pressure and this property helps to seal voids and fractures and maintain impermeability.

d. Since salt flows readily under tectonic stress, a deposit with undisturbed bedding is suggestive of a geologically stable setting.

e. Salt has a higher thermal conductivity than other rock types, so that heat transfer from radioactive waste would be enhanced, limiting maximum heat temperatures and gradients.

f. Salt formations are distributed over wide areas.

g. Salt is readily mineable and the mining technology is in extensive use.

h. Salt formations are known in regions of low seismicity in the United States.

However, salt has a number of disadvantages also:

a. It has a high solubility in water.

b. It has low sorption capacity to retain released nuclides.

c. It has value as a natural resource, and it is often

> associated with even more valuable potash or gypsum. (OECD, p. 53)

Salt also has the property that, unlike other rocks, it creeps or flows readily under elevated temperatures or stress; some consider this an advantage (the salt would eventually close in and seal a repository); others view it as a disadvantage. Deformation of the salt might cause a rearrangement of the spacing of the waste canisters and fracturing of the overlying rocks; and it would be a potential problem in keeping the repository open for a long operational period before decommissioning.

The plasticity property would be particularly serious if retrievable storage is envisioned. For example, Wendell Weart, Manager, Waste Management Systems Department, Sandia Laboratories, stated (Tr. 10/27/77, p. 134) with regard to a policy to provide an engineered retrievability option for a repository design in New Mexico salt:

> The loading density which you can put canisters into the ground, the fact that you have to develop special systems to enable you to retrieve the waste, it may not be as simple a matter as taking it out, not just a reverse of the process of putting it in. So we're developing special systems to assure us that we can take it back out. Just a lot of additional engineering—a lot of additional calculations to insure that you can keep an opening to get back into to be able to retrieve it. You may actually have to go back in and shave off the walls and ceiling periodically in order to maintain adequate size openings.

The mining, handling, and emplacement of solid high-level radio-active waste in salt is probably feasible. Salt is routinely mined in the U.S. on an extensive scale:

more than forty million tons are mined annually by a variety of methods. (Y/OWI/ SUB-76/16515, p. 3-1) The excavation of a high-level waste repository would be done by the same room-and-pillar method which was used for over one-fourth of the U.S. 1973 commercial production (12.4 million tons). (*Id.*)

To date, the only vault test (an experiment at or near typical repository depths) that has been conducted has been in bedded salt (Project Salt Vault at Lyons, Kansas). (Y/OWI/TM-25, p. 8) During this test, a total of 21 canisters of Engineering Test Reactor spent fuel were emplaced in the repository and later retrieved. This confirmed the physical ability to handle and emplace waste canisters in bedded salt. For other rock formations, waste disposal might be feasible but comparable preliminary vault tests have not been made.

The Silurian salt deposits of the Michigan and Appalachian (northern Ohio and western New York) basins "were given serious consideration in 1972 as an alternative to the proposed federal repository in Kansas." (Y/OWI-8, p. 22) Considerations for reconnaissance in these areas included the search for candidate areas where there was: "(1) absence of petroleum production and solution mining (brining operations); (2) minimum number of boreholes that penetrate the salt section; (3) avoidance of areas that have poorly plugged wellbores or wells with ill-designed locations." (*Id.*, p. 23)

2. *Argillaceous Formations*

The main properties of argillaceous formations (clays and shales) "which make them potentially desirable as host rocks [for waste disposal] are low permeability, high ion-exchange capacity, and relatively high plasticity." (*Id.*, p. 38)

For clays characterized by a high degree of plasticity,

> A containment reliability comparable with that in salt would be expected; this requires confirmation as investigations of disposal into clays have to date been very limited. The main concern with argillaceous materials [clays] is the behavior and fate of the large amounts of water which they usually contain. The plasticity of clays is directly proportional to the water content, and it would seem inevitable that suitable clays, in order to be sufficiently plastic, would have to contain at least 15-20% water. . . . In comparison with salt, clays have a lower thermal conductivity by a factor between two and four and they can be rather more difficult to mine. On the other hand, they offer significant advantages, such as high sorption capacity, insolubility, and very low corrosion of the waste containers." (OECD, p. 53)

Piper indicates that "As shale and mudstone are relatively impermeable only when not jointed or fractured, only their thickest-bedded, strongest, least porous, and non-fissile varieties promise suitability for a waste repository" but that there are "numerous extensive deposits which are suited" in the U.S. (Y/OWI/SUB-3745/4, p. 10)

Currently, research is being done on shales at the Nevada Test Site (Elena formation) and on the Conasauga formation in Tennessee. (MacKay, Tr. 10/27/77, p. 42) The main focus is on understanding the behavior of the materials when heated, and *in situ* tests are planned using electric heaters. (*Id.*, and various OWI monthly progress reports)

Although mining experience in shale is limited because it does not usually contain valuable minerals (Y/OWI/SUB-76/16515, p. 5-1), there is much expe-

rience in tunneling for transportation and water transport projects (*Id.*, p. 5-25), and in construction of caverns for liquid petroleum gas (LPG) caverns. More than fifty tunnels have been driven in shale formations, ranging up to thirty feet in diameter and over fifty thousand feet in length (*Id.*).

3. *Crystalline Rocks*

The crystalline rocks of interest include metamorphic rocks (such as schist, gneiss, and quartzite), and igneous rocks (such as granite and basalt). There is a "high degree of interest in crystalline rocks for waste disposal in the international community, especially in Canada and Sweden, where they are considered the top priority." (*Id.*, p. 47) "The most likely insufficiency of these rocks is too-close spacing of joints" and, in the case of schist, serious anisotropy due to strong foliation. (Y/OWI,SUB-3745/4, p. 15).

> Crystalline rocks are virtually impermeable when massive but are often able to transmit large volumes of water if they contain joints or fractures. [Crystalline] rock formations containing little or no circulating groundwater exist, usually as a result of particular geologic settings, such as secondary sealing of fractures or isolation from aquifers by impermeable beds. (OECD, p. 54)

Thermal conductivity in these crystalline rocks is "generally moderate except in quartzite, in which it is notably large and approaches the conductivity of salt." (Y/OWI/SUB-3745/4, p. 15)

"Structurally, the crystalline rocks offer excellent potential for mined caverns because their strength is normally quite high and large openings which require little roof support can be made." (Y/OWI-8, p. 77) In

addition, there is extensive tunneling experience in these rocks (Deju, Tr. 10/11/77, p. 6) and underground construction methods in basalt and other crystalline rocks have been known for a long time. (*Id.*, p. 8) While Piper (Y/OWI/SUB-3745/4, p. 15) notes that in crystalline rocks, "excavation would be somewhat slow and costly," Deju says of basalt that it is "fairly easily mined, it's a hard rock, but. . .it's a lot easier to mine than most people think;" he added, "basalt is a lot harder than granite." (Tr. 10/11/77, pp. 15, 17)

The APS Study Group has recommended development and construction of two repository sites, each in different geologic media but one preferably in granite.*

In Sweden, it has been proposed that waste be stored in a granite repository and surrounded on all sides by three meters of impermeable clay. (JPL 77-69, p. A-18)

It should be noted that the maps of geologic formations in the United States depicted in the OWI NWTS Program Progress Report (Y/OWI-8, Figs. 1.7, 1.8, and 1.9, pp. 11-13) do not depict formations in a way that their areal abundance may be compared. That is, Figure 1.7, depicting "Rock Salt Deposits in the United States" shows all salt formations including those at depth, while Figure 1.9, "Crystalline Formations" shows only the crystalline rocks exposed at the surface. In fact, if the map for crystalline rocks were drawn on an equal basis with that of salt deposits, much larger areas of crystalline rocks would be shown because they underlie sedimentary rocks at depths of one thousand meters or less in

---

*"Although we see nothing wrong with developing a test facility in salt, we recommend that, because of unresolved factors such as future anthropogenic activity that may most affect salt, a test facility also be developed in at least one other medium, preferably granite, before the decision is made to complete a full-scale repository" (APS, p. VII-6).

much larger areas of the United States than are shown on the map.

Present studies of crystalline media include a review of the general characteristics of the Precambrian granites and gneisses in the Canadian Shield region, exposed in the Lake Superior region of northern Minnesota, Wisconsin and Michigan. "The Precambrian Shield is considered favorable for storage partially because of the region's great tectonic stability. Seismic risk is also very low. . . .in addition, rates of erosion in the region are minimal. . . ." and the crystalline rocks are considered favorable "largely on their presumed chemical and mechanical stability." (Y/OWI-8, p. 48) Of further interest, studies in several deep mines in the Superior region have included:

> . . .the somewhat surprising observation. . .that the mines were completely dry below depths of about 1,000 m. In spite of observable active circulation of water at shallow depths and the presence of a high degree of fracturing, faulting shear zones, and jointing, there was no groundwater influx into the deeper portions of the mines. (Y/OWI-8, p. 47).

One of the major elements of the Department of Energy NWTS program is the investigation of the basalt formations underlying the Columbia Plateau as a potential repository at the Hanford Reservation in Washington. These investigations began in the late 1960s to evaluate the potential for containment of high-level radioactive defense wastes generated at Hanford. (Y/OWI-8, p. 44) Advantages of the Hanford basalt have been cited by Deju. Tr. 10/11/77, p. 14-15)

Some of the Hanford basalts have a low degree of permeability. "Some basalt flow units are quite imper-

vious since nearly all joints and fractures are filled with secondary minerals. . . . These thick basalts may represent hydrologically isolated units." (Y/OWI-8, p. 45) Piper, a consulting hydrologist, concluded in 1975 that "many potential repository sites exist in the [Hanford] basalts but that before a particular site is selected, an intensive study of the local hydrological and structural conditions would be required." (Y/OWI-8, p. 44) The basalts are highly competent. "Because the rock is so competent, you should be able to retrieve the waste for a short period of time, or whatever period of time you want to keep it open." (Deju, Tr. 10/77/77, p. 16)

There is extensive tunneling, mining and well drilling experience in the basalts. Because of the basalts' competency, "many tunnels are available in basalt without any support." (*Id.*, p. 14) Studies to date are reported to indicate that waste-rock products from basalt interaction will not migrate readily. (*Id.*, p. 15) "In the past year, we conducted some of the first experiments on spent fuel and basalt interactions. . .those studies are fairly advanced, and right now we're conducting some more sophisticated experiments and some actual stability modeling." (*Id.*, p. 102) Of the possible thermal effects of waste on basalt, he said:

> The integrity of the basalt. . .has been tested under conditions of no heat loading. . . . No one has put heat into a mine cavity for actual operating purposes, be it salt, basalt, shale or anything, so those tests have to be conducted. That is the heat load that a facility will take has to be determined. Once you've determined it, you engineer for it. (*Id.*, p. 84)

4. *Carbonate Rock* (limestone and chalk)

To be suitable as a repository medium, limestone would have to be of the "thicker-bedded and finer-grained varieties, generally of inorganic chemical origin,

free of channels and intergranular voids formed by dissolution." (Y/OWI/SUB-3745/4, p. 15) Excavation "should be of only moderate difficulty" and thermal conductivity would be about equal to that of crystalline igneous rocks. (*Id.*, p. 15) Cursory studies indicate a number of areas worthy of further study (Y/OWI-8, pp. 42-43), but there does not seem to be a large research effort on carbonate media at this time.

> Structurally, carbonate rocks are similar to the crystalline rocks because their strength is normally high and because large openings can be constructed with minimum roof support. The carbonate rocks, however, present problems of water inflow during and after construction. (*Id.*, p. 77).
>
> A significant hazard. . .is that solution channels or jointing patterns will not necessarily be intersected by boreholes that are drilled in the course of a feasibility operation. (*Id.*, p. 78)

Chalk appears superficially favorable as a potential repository medium in that commonly it is massive, very fine grained, and homogeneous. (Y/OWI/SUB-3745/4, p. 16) Favorable characteristics also include easy excavation, very low permeability, occurrence in regions of low seismicity, and extremely fine grained texture appearing to produce self-sealing of fractures. (Y/OWI-8, p. 51) However, its thermal conductivity is only one-tenth that of salt, it is susceptible to dissolution by circulating groundwater, and it might not satisfy hydrologic criteria for a repository. (Y/OWI/SUB-3745/4, p. 16)

4.3.4 *Conditions for Demonstrating Isolation*

While geologic disposal has an intuitive appeal, for all rock types and locations there are many factors that could contravene the ability of a geologic formation to perform the isolation function. Most importantly, both the action of

emplacing the waste and the presence of the waste may disrupt the very features that make geologic formations attractive in the first place.

1. The proceses of locating, analyzing and utilizing a desirable formation require that the long path between the repository horizon (the mine level) and the biosphere (specifically the earth's surface) be shortened by the need to drill boreholes and sink shafts.
2. The underground integrity of the immediate repository location is compromised by the excavation required to emplace waste canisters.
3. A seismic event could disrupt the integrity of the repository such that the ease of dispersal to the biosphere is increased.
4. Seismic events or climatic changes could change the hydrologic regime to such an extent that the effective path length to the biosphere would be shortened.
5. Future generations might drill or mine into a repository while searching for natural resources.
6. The radioactive waste itself can cause thermal expansion and then contraction of surrounding rock formations resulting in fracturing.
7. Ionizing radiation can alter rock properties and possibly remove or alter desirable characteristics.
8. Thermally-driven processes such as brine migration, salt decrepitation, or dehydration of shale could induce or accelerate nuclide transport within the formation.

The essential question remains, given the realities of geologic formations, can isolation be assured? The geologic isolation concept depends on being able to identify what natural features are needed and then finding an actual location in which nature has accumulated all the right features.

In making its recommendations on geologic disposal in 1957, an NAS/NRC committee cautioned its judgments were subject to verification. (NAS 1957, p. 13) The current National Waste Terminal Storage Program, underway since 1975, still includes "technical activities, in addition to geologic studies, which are required to identify a waste repository site, *demonstrate its feasibility, confirm its suitability*, and thoroughly analyze all aspects of the repository design proposed for the site." (Y/OWI-8, p. 59, emphasis added) Five previous attempts to develop projects for geologic disposal have been uniformly unsuccessful due to unanticipated technical problems as reviewed in Section 4.2. Liquid injection to porous media was abandoned. A proposal for a liquid waste disposal in salt was abandoned. A disposal site under the Savannah River Reservation was proposed but abandoned after an NAS committee recommended against its use. A proposed repository in Lyons, Kansas, was eventually abandoned after serious technical problems were encountered. From this experience it is clear that confirmation of the concept is not trivial.

The most basic element of the "demonstration" of geologic isolation consists of the confirmation of its postulated desirable characteristics in an actual location, a task the NAS recognized in 1957. This "demonstration" would consist of:

1. A series of tests confirming that a number of desirable characteristics needed to isolate wastes are in fact effective.
2. A set of isolation criteria that define the characteristics to maintain isolation of geologic settings needed.
3. Verification that an actual site exists which meets these criteria.

4. An understanding of physical reality validated by scientific evidence sufficient to show a high degree of confidence that isolation is maintained even under extreme and adverse situations.

The question might be raised why such intricate care is needed. Even under the worst conditions of geologic disposal is the risk small? Several attempts have been made to estimate on a "worst case" basis what repository failure will mean. Burkholder and others have been made several such calculations, but conclude that the dose to man is highly dependent on what parameters are chosen (see e.g., BNWL-1927, pp. 21-38). In some cases where path length to the biosphere is very short, the largest dose may be up to several thousand times background. (*Id.*, pp. 21, 38) In a recent article de Marsily, *et al.*, (1977) estimates releases to the biosphere in some cases several hundred-fold higher than the maximum permissible concentrations. (p. 525) Clearly, even from these very gross analyses, the safety of disposal is not an inherent feature of geologic disposal in general. Safety depends on having proper circumstances.

4.3.4.1 *Status of Knowledge of Key Desirable Features*

To resolve the question of the safety performance of geologic isolation, information on a number of key parameters, both generic and site specific, is required. The key parameters include:

1. Hydrology—Ensuring the absence of circulating groundwater.
2. Seismic and tectonic activity—Avoiding areas where disruption is likely.
3. Leach rates of embedded wastes—Having a waste form resistant to dispersion.
4. Waste-rock interactions—Ensuring that the physical, chemical, and thermal effects induced by the pres-

ence of the waste do not create unmanageable disruptions.

5. Sorption (retention) phenomena—Having surrounding strata as a barrier through ion exchange, filtering, etc., to "hold-up" any waste radionuclides which are inadvertently released.
6. Rock mechanics—Ensuring the structural integrity of the formation.
7. Shaft sealing and borehole plugging—Being able to reseal all penetrations and restore the original isolation of a formation from the biosphere.

The status of the knowledge base in each of these areas and of their interrelations in an integrated system is crucial as a first step in the ability to confirm isolation. For reasons detailed below, there are substantial gaps in understanding of processes and deficiencies in available data for each of the seven parameters.

1. *Hydrology*

Hydrology is one of the most important, if not *the* most important (USGS 12/76, p. 94), property of a site to understand and quantify in order to assess the integrity of geologic isolation because:

> Groundwater movement provides the potential for the waste to escape from the confines of the disposal environment and migrate to points that are accessible to the biosphere. (USGS, 1976, p. 94)

The key consideration in hydrology is that the formation enclosing the repository should ensure the absence of contact with a flowing aquifer which communicates with the biosphere. This is a highly site-specific property. (NRC Response, p. 1-155) A number of predictive groundwater flow computer models exist. (*Id.*) The challenge is to predict and ensure suitable

hydrologic conditions far into the future, even considering such eventualities as climatic change.

"Major climatic oscillations, with periods of the order of 10^4 - 10^5 years have been a feature of global climate for at least the past million years and may be expected to continue." (USGS 1976, p. 31) One of the major questions that the USGS proposes to address is the effect of future climates on the hydraulic regime and geomorphic setting (*Id.*)*

Thus, "Although a proposed site may at the present time be 'dry' and seem free of the effects of groundwater, it undoubtedly is, or at some time during the period of concern (possibly up to 10^6 years) will be, in fact, located within an active groundwater flow system." (APS, VII-45)

Because of the uncertainties in being able to make predictions of future hydrologic systems confidently, the APS recommends careful consideration of other redundant barriers and attenuation factors. (*Id.*) The APS Study Group reviews a number of considerations in analyzing hydrology and recommends an approach, but notes ". . .we expect that a repository site in bedded salt with suitable hydrogeology can be found, although an adequate data base does not yet exist to permit completion of the recommended analysis of groundwater flow and mass transport." (p. VII-4) The study goes

---

*The effects of continental glaciers beyond their own margins. . . include groundwater regime changes because of precipitation and sea-level changes, accumulation of pluvial lakes, periglacial phenomena, and incision and erosion in response to sea-level changes. The effects of glacial runoff must have been severe. Preliminary calculations suggest that, during deglaciation, the flow of the Mississippi may have been several times the present flow of the Amazon." (USGS, 1976. p. 33)

on, however, to add that the data for a specific site could be obtained in the next few years. (*Id.*)

Mathematical modeling of hydrologic systems is being developed as a tool in predicting the consequences of groundwater flow in and around a repository (see, for example, Tr. 10/27/77, pp. 140-162). A statement by the USGS makes us skeptical of the present state of development of these models: All geohydrologic "models in existence are relatively simple ones, the most sophisticated of which can only handle two or three parameters and not the large range of variables which would be necessary to completely describe the natural environment. For example, we currently do not have a demonstrated capability of modeling flow through fractures or solution cavities because the basic equations to describe such phenomena have not been verified." (USGS notes, 1977, p. 3) "Much is known about the characteristics of fluid flow through relatively permeable rocks, but little is known about the characteristics of flow through fractured rocks." (USGS, 1976, p. 75)

In addition, the transport of radionuclides in the presence of hydrodynamic dispersion is not fully understood. (USGS 1976, p. 4) "In spite of the large body of literature on radionuclide transport, little is known about the transport in low permeability rock." (Y/OWI/ SUB-77, p. 21) Yet low permeability rock is favorable for waste disposal. (Y/OWI/SUB-3745, pp. 22-23)

The American Physical Society Study Group concluded:

> "[I]t is unreasonable to expect a model to yield a prior description of contaminant distribution in a real subsurface situation. Problems of accurately specifying the actual configurations and of deter-

> mining appropriate values of transport parameters add uncertainties to the analysis. Nevertheless, the predictive methodology provides the only way to evaluate simultaneously all significant transport and attenuation processes." (APS, p. VII-45)

A number of other specific hydrologic problems have been identified with regard to salt as a geologic medium for a repository. NRC notes the potential for salt dissolution:

> Significant changes in groundwater flow caused by groundwater withdrawal (wells), climatic change, changes in surface hydrology, etc. could alter salt dissolution rates, either increasing or decreasing them. NRC-sponsored waste disposal studies are examining the consequences of salt dissolution on the long term integrity of a waste repository in bedded salt. No results are as yet available. (NRC Response 1-156)

The U.S. Geological Survey observes additional problems for confirming suitable hydrologic characteristics:

> A number of problems with the technology remain to be solved for HLW repositories. In order for the repository to be acceptable, one will have to insure that the host rock be essentially impermeable. . . . This raises the question of how to measure the permeability in a drill hole with such low permeability. We believe the problem is tractable but will require careful consideration." (USGS 1976, p. 42)

There is also an interaction between heat and the hydrologic system:

> In the vicinity of a hot canister it is likely that a convective groundwater cell will be established. Such a cell will redistribute heat and transport con-

> taminants. Both the movement of the groundwater as well as the potential transport must be fully understood. The physics of the flow is complex; steam may be generated in the vicinity of a hot canister complicating the flow. The Geological Survey has developed three-dimensional numerical models for the analysis of similar problems associated with geothermal reservoirs and proposes to adapt these to the problems of HLW." (USGS 1976, pp. 25-26)

More generally there are a number of interactions which are important:

> Hydrologic characteristics are highly depended [*sic*] on the permeability, hence degree and type of fracturing. These in turn are functions of the present state of stress and the rates and predicted changes in rates of strain in the rock. These are factors which affect, are affected by the nature of microfractures and pores, and by the mineral phases presently in the rock and those that will form during the thermal life of the waste emplaced within the rock. Thus, there is a complex and interdependent play of major processes, all of which must be thoroughly understood in order to be able to know how fluids presently move through rocks and the likely ways in which that movement will change in time and in presence of added heat, radioactivity, and the possibility of reactive chemical waste." (USGS 1976, pp. 43-44).

In conclusion, there are deficiencies in the ability to characterize groundwater flow and there are gaps in the knowledge about necessary hydrologic conditions for waste isolation.

2. *Geologic Stability*

Next to hydrology, seismic stability is regarded as the most important repository characteristic because:

> The integrity of the geological containment itself is the most important barrier and in choosing a formation for disposal operations emphasis should be placed on its inherent ability to provide long term isolation. . . . (OECD, p. 52).
>
> [If] it were decided that a given geological environment would naturally protect waste from circulating groundwater, then the next consideration is what would or could change this natural protection. The largest single force that could change this protection would be crustal movements resulting in faulting and changes in sea-level elevation. (DeBuchananne 1974, p. 361)

In addition to actual fault rupture, ground shaking is also important:

> Ground shaking associated with earthquakes is a significant problem in the management of high-level radioactive waste. The risk may occur in two ways: (1) strong ground shaking may result in failure of the waste container; and (2) strong ground shaking may cause failure of the rock surrounding the containe. [*sic!*] (USGS 1976, p. 29)

Attempts are now being made to predict earthquakes, but the science of earthquake prediction is in its infancy. "The long time periods involved in waste storage (250,000 years) and the use of underground facilities introduce considerations that rarely, if ever, have been encountered in evaluating earthquake hazards." (USGS 1976, p. 29)

G. de Marsily, et al., have addressed the question of whether geologists can guarantee isolation of radioactive

waste within a geologic repository. In one section of their paper they discuss two important points. First, the assignment of probabilities to rare events, and second, the specific assignment of probabilities to faulting which must be done on a site-specific basis. They conclude it may be difficult to assess the probabilities of faulting for an area historically very stable.

> "An approach to geologic confinement is often sought by trying to quantify the probability of occurrence of any of these [geologic] events and their nuisance value to man. Then, by combining these probabilities and nuisance values, one tries to assess the safety coefficient of the repository and to compare it to the accepted safety coefficient for present risks. This approach does not seem realistic to us because basically, the earth's development has not been a random phenomenon (possibly apart from the fall of meteorites), and no geologist can seriously given [*sic*] reasonable figures for these probabilities.
>
> "Let us given an example. Faulting is well known to be a phenomenon not randomly distributed in space. It would be possible, therefore, to given [*sic*] an estimate of the probability of faulting in a tectonically active area, such as the San Andreas Fault area in California because, there, faulting actually occurs and the estimated probability would be based on historical and geological evidence. But as this probability would be very high, no one would put a repository there.
>
> "In a zone that is tectonically very stable, no such data on faulting are available, because there is no record, nor evidence, of faulting. Information on faulting collected from the rest of the world and applied to the studied location would be irrelevant:

> we are interested only in the risk of faulting in the location of the proposed repository. If one estimates the probability of faulting by space averaging, one assumes that the phenomenon is stationary, which is definitely not the case. The mechanisms which might cause faulting in this area are not random, but definitively deterministic. It is our knowledge of these mechanisms which does not suffice to provide an answer. . . . This does not mean that one should not look for a very stable area for locating a repository; it only means that the past stability of an area is not sufficient to assess a probability coefficient for the future stability of the same area." (de Marsily, et al., p. 521) .

In addition to assessing geologic stability, it is necessary to understand the state of stress of the earth's crust because:

> "It is the stress differences in three dimensions which produces strain-folding, faulting, earthquake activity, and fracturing. Properties of rock breakage are controlled by the state of stress. It is this state of stress which causes some fractures to be open while other sets of fractures are essentially closed." (USGS 1976, p. 75)

The U.S. Geological Survey has stated that "*in situ* stress measurement will have to be made at all proposed HLW repository locations. However, it is also necessary to have a complete picture of the regional stress patterns in order to determine if local [*in situ* stress] measurements are in any way anomalous or pose special problems" (USGS 1976, p. 76) However, knowledge of these regional stress patterns for stable parts of the North American plate is just beginning to emerge (USGS 9/76, p. 76).

In specific areas, the USGS has cited concerns regarding geological stability. The USGS has stated that there is a need to assess the regional seismicity of the Central Basin Platform "which historically has been considered aseismic," and which is the site "of a series of low-level events which may be related to water flooding of oil wells in the vicinity. The seismicity is significant for any hazard it may pose to the nearby Waste Isolation Pilot Plant (WIPP) in southeastern New Mexico." (USGS 1976, p. 114) For specific sites in the Great Basin active seismic belts may migrate:

> "One of the most crucial questions regarding the suitability of the Nevada Test Site or the surrounding Southern Great Basin for long-term storage concerns possible future tectonic and volcanic activity. . . . Although the Test Site apparently lies outside of presently active major seismic belts. . .small earthquakes of magnitude less than four have been relatively common. Furthermore, there is some evidence that active seismic belts, accompanied by large earthquakes, may shift back and forth across the Great Basin with time." (USGS 1976, p. 85)

Assuring the requisite stability is, therefore, constrained by the need for site specific knowledge. Stability is quite variable from site to site.

B. *Leach Rates of the Emplaced Waste*

The majority (in terms of curies) of emplaced waste will be in a stable leach resistant form — either as solidified reprocessed waste or as spent fuel.

The Expert Group of the OECD Nuclear Energy Agency stated that one of the "most important" barriers that may contribute to isolation of waste is:

> The nature of the waste itself: conditioning of the waste into a stable solidified product of low leachability (e.g., by vitrification) should effectively delay mobilization of radionuclides in case of contact between waste and water. (OECD, p. 51)

In their report to the American Physical Society, the Study Group on Nuclear Fuel Cycles and Waste Management indicated that:

> [A]n obvious design objective is to develop a waste form of sufficiently high resistance to dissolution by groundwater that whatever the rate of groundwater transport, the rate of release of harmful material to the aqueous medium would be sufficiently low to avoid excessive subsequent exposure of any individual. (APS, p. VII-57)
>
> The effectiveness of a low leach rate is not predicated on assuring *no* release to the biosphere but on the knowledge that, in the event of the failure of complete confinement, the stability against leaching can *limit* the release rate to what may be deemed acceptable levels. (APS, p. VII-58)

Others disagree as to the importance of the rate of waste dissolution. A Lawrence Livermore Laboratory report to the U.S. Nuclear Regulatory Commission (NUREG-0279, p. 14) states that under the assumed conditions of the study, the rate of waste dissolution in groundwater is not a significant factor in determining dose to man. However, at least for the first few tens of thousands of years, if this were the case, confidence in repository integrity and nuclide migration barriers must be extremely high.

The incorporation of reprocessed fuel radioactive waste into a matrix, typically a glass, is regarded by some as a redundant barrier (after the geologic medium

itself) to radionuclide transport in groundwater (OECD, p. 51; de Marsily, et al. p. 520; Weart, Tr. 10/27/77, pp. 144-145; APS, pp. VII-57, 58) However, because of federal policy on reprocessing, it is uncertain whether spent fuel or reprocessing wastes will be disposed of when the first commercial repository becomes operational.

Although solidified waste forms have been studied extensively (CONF-770102 and BNWL-2252), a committee on leaching of glass and ceramic waste forms at a workshop on Ceramic and Glass Radioactive Waste Forms came to a consensus " . . . that there is relatively little basic science data available to predict the long term leaching of glass, glass-ceramic, or ceramic waste forms. A systematic investigation of the influence of the severe environmental conditions expected in nuclear waste storage on the leaching of a variety of simple and complex glass compositions . . . must be done to establish a scientific basis for long term predicative capability." (CONF-770102, p. 235)

The committee enumerated specific areas in which knowledge deficiencies exist. Some of the specific points made are:

a. Prediction of the effects of glass composition or type and duration of radiation on leaching is not likely at present.
b. Water composition is an exceptionally important variable about which little is known relative to leaching.
c. The ability to extrapolate 25-90° C data needs to be validated; and accelerated leaching tests need to be established.
d. Leaching kinetic and mechanisms are not understood.

e. The effects of phase separation on leaching of soda-borosilicate glass has been investigated over only a relatively small compositional regime.

f. The influence of salt brines and the effects of high pressure on leaching are not understood. (CONF-770102, pp. 236-242)

The APS Study notes uncertainties on glass as a stable barrier due to similar concerns as those of the above conference, including "the high probability of devitrification with the associated uncertainties in the mechanical integrity and chemical durability of the resultant partially crystalline state" (APS, VII-63) and concludes "our present knowledge of the properties of borosilicate glass as a waste form is inadequate to place reliance on the glass as a principal barrier to radionuclide release." (*Id.*)

Studies of spent fuel leach rates under conditions simulating disposal in salt have not been performed (NRC Responses, pp. 7-135 and 7-136). Studies of fuel pellet leach rates in distilled water show results similar to glass (BNWL 2052, July 1976; NRC Responses 1-159). Release rates as measured in fuel storage basins do not indicate massive release rates for failed spent fuel. (BNWL 2256, A.B. Johnson, pp. 18-21)

Data on leach rates for other waste forms such as TRU or cladding hulls do not seem to be extensive, but do indicate a wide variation in leach rates: 2×10^{9} to 0.1 g/cm^2 day for cement and 10^{-3} to 10^{-7} day for bitmen [*sic!*]. (TAD, pp. 12.18, and 12.23) Studies of releases from emplaced gaseous wastes are being initiated and no results are available (NRC Responses, p. 1-138).

The consensus appears to be that while each resistance could be an important barrier to waste dispersal, there is not enought [*sic*] known to be able to predict long-term resistance.

4. *Waste-Rock Interactions*

The introduction of a high-level waste canister into the repository medium will provide a source of radiation and heat with the potential for causing changes in the host rock. Whether or not these changes alter the desirable characteristics for which the rock and site were originally chosen is an important consideration if predictions are to be made with any accuracy concerning the performance of the repository when subjected to added heat, increased radiation levels, and complex chemical species.

Even though the waste is initially separated from the host rock by the canister in which it is packaged, it will be necessary to understand phenomena which may occur directly between the waste and the rock. A consultant to Oak Ridge National Laboratory and the Office of Waste Isolation explained that:

> Potential chemical reactivity between mineral constituents of the medium and of the waste cannot be ignored because inevitably, over the very long term that wastes must be excluded from the biosphere, canisters will fail and waste will make contact with medium. Sufficient water probably will be present to serve as a solvent and vehicle. (Y/OWI/SUB-3745/4, p. 9)

Thus, in the repository medium there will exist foreign material having different properties than the host rock. DeBuchananne of the Geological Survey characterized the problem to be addressed as follows:

> [M]aterial which is not in mechanical, thermal, or chemical equilibrium with its natural environment is placed in a complex geologic host with the objective of not allowing physical and/or chemical migration of radionuclides away from the disposal site into the biosphere in hazardous concentrations. The multi-component physical-chemical system that will develop in and around the repository as a result of waste-rock interaction must be completely understood in order to avoid any unforeseen effects. The effects of natural disturbances on local equilibrium must also be considered. (DeBuchananne Tr. 3/22/77, p. 29; USGS 1976, p. 1)

Thus, it can be seen that an understanding of the interactions which will occur between the host repository rock and the introduced waste material must be gained in order to reach valid conclusions concerning any possible changes which may occur in the repository.

The various waste-rock interactions may be grouped into three general areas: (a) thermal effects; (b) radiation effects; and (c) chemical effects.

a. *Thermal Effects*

The wastes (i.e., spent fuel or solidified high-level waste) placed in a repository produce heat resulting from decay of the radionuclides. This heat may be considered to have an affect [*sic*] on the repository at three different levels of detail (Y/OWI/TM-25, p. 3):

- In the immediate vicinity of the emplacement hole;
- In the pillar, floor, and roof of the underground cavern;
- In the far field at later times.

The first two levels only affect the relatively short-term aspects of repository performance; they are important during the operational phase of the repository when the rooms must remain open and stable. Also, capability to re-enter the rooms during the retrievability period must be maintained. (*Id.*, p. 4)

The far-field effects of increased temperatures are important in the long run as they are related to repository integrity. One consequence of increased thermal loading of an area is that heat will be conducted into the surrounding geologic media causing expansion in the emplacement stratum as well as in underlying and overlying layers. This thermal expansion and eventual contraction could compromise the integrity of geologic barrier layers, causing cracks which could allow circulating groundwater to contact the wastes. (NRC Responses, p. 7-74)

Mr. Jim Campbell, Project Leader, Methodology Development for Risk Evaluation of Waste Isolation, Sandia Laboratories, in describing a model under development for mechanisms of potential waste release from a salt repository overlain by shale, listed the following considerations:

> What we are doing is to simulate the interaction between the waste and the host rock. By simulate I mean model the waste, the emplacement medium, the overlying and underlying layers, take into account the thermal output of the waste, expansion from the heat output from the wast, contraction as the heat is conducted away to the surface or taken away in the aquifiers, and compaction of the backfill material . . . As you watch the thing evolve in time, you expect some expansion of the overlying layers, possibly some uplift at the surface. . . .

> Ultimately some contractions, settling, compacting of the backfilled material would occur. We're concerned with possibilities such as cracking in the overlying shale layers which might allow circulating water to contact the salt and perhaps dissolve it away. So we look at cracking, movement of waste through cracks, and dissolution of salt. (Campbell, Tr. 10/27/77, pp. 145-146)

In the case of a repository in bedded salt, fractures induced in shale layers overlying the repository are of particular concern since these layers provide impermeable barriers that protect the salt formation from the intrusion of groundwater. (Y/OWI/TM-24, p. 12) Thus, in designing a repository, attention should be paid to these large-scale rock movements and their implications for the overall integrity of the geologic containment. (Y/OWI/TM-25, pp. 3-4)

When a heat source is introduced into a salt repository, an additional phenomenon of interest occurs. Brine-filled cavities, ranging in size down from a few millimeters, occupy about 0.5 percent of the volume in many bedded salt deposits. When the cavities are subjected to a temperature gradient, they will move either up or down the gradient because of the different solubilities of salt at different temperatures across the cavity, thus providing a possible means for nuclide transport. (NUREG-0116, p. 4-76) A cavity containing only brine will move up the gradient in the direction of the heat source, while a cavity containing some gas can move down the gradient. (Id.)

> "The behavior of brine inclusions within aggregates of crystals, such as in bedded salt is unknown. However, data for single crystals have been used to estimate that the maximum rates of inflow of

brine to a disposal hole in bedded salt would be 1 to 2 liters per year for the first 20 years after burial of 10 year old wastes. The estimated inflow tapers off to negligible amounts at about 50 years after burial as a result of decreasing temperatures and a leveling off of the temperature gradients. (Y/OWI-8, p. 103)

Besides movement of fluid inclusions, brine can also form from water adsorbed on surfaces, diffusion along grain boundaries, and dehydration of hydrous minerals. (Penn. State, p. 65)

Jenks of OWI indicates that "no serious brine-related hazards or effects have been identified that cannot be counteracted by appropriate operation methods and procedures in a repository. However, experimental information is needed regarding the amounts of brine and brine products which will be encountered in a repository and also regarding the effects of the brine on sleeve and canister corrosion and on consolidation of the backfill". (Y/OWI-8, p. 103)

The disturbance from the creation of the underground caverns is well within the experience of the mining industry, and a large data base exists. The other disturbance, which is caused by the heat generating characteristic of the waste, is not within the realm of our usual experience since large masses of rock are not normally heated. Consequently, the thermal loading that should be allowed in a repository takes on great importance and leads to the requirement for an *in situ* testing program to gather data relative to the effects of heat on the formation. (Y/OWI/TM-25, p. 3)

The Office of Waste Isolation has supported a broad analysis of thermal effects. *In situ* experiments were conducted in Project Salt Vault (ORNL-4555) and are

now underway at a salt dome on Avery Island, Louisiana. (Y/OWI/TM-25, p. 11) Heater tests on shale are being conducted in Tennessee (Y/OWI-8, pp. 130-134) and granite tests are planned for Nevada. (Y/OWI/INF-3/11, p. 12)

b. *Radiation Effects*

When a high-level waste container is placed in a salt repository, the materials surrounding it will be subject to high gamma ray intensities and doses, and radiolysis products will be formed. (NUREG-0116, p. 4-76) Nearly all of the products are formed within the migrating brine inclusions by radiation absorbed within the brine and by dissolution of trapped chemically active species from the irradiated solid salt. Firm information on the identities and amounts of radiolytic and thermal reaction products can be furnished by site-specific *in situ* experiments to help establish suitable burial and operating procedures. (*Id.*)

In addition to the formation of radiolysis products in salt, activation products and impurities would result from neutron irradiation resulting from spontaneous fission of the transuranics and reactions in the inert material of the waste. (*Id.*, p. 3-81) NRC believes that the effects of neutron radiation would not be important relative to the gamma source present in the high-level waste; however, they also indicate that no detailed and documented analysis of salt activation products have been performed. (*Id.*, p. 3-81)

NRC also indicates that further information, possibly requiring laboratory or field tests, is required for detailed analysis of radiolytic and thermal effects. (*Id.*, p. 3-81)

Another question relative to the gamma radiation emanating from the solidified high-level waste or spent fuel is whether the amount of stored energy which would accumulate in the adjacent rock and the characteristics of the release of this stored energy could create excessive temperatures in the rock or release mechanical energy in amounts capable of rupturing the surrounding rock. Jenks and Bopp have studied storage of gamma ray energy in salt as well as the thermal annealing characteristics of the stored energy to determine any potential hazard. The results (ORNL-5058, p. 1) showed that negligible amounts of energy will be stored in salt at temperatures above 150°C due to thermally activated annealing. Generally, the salt immediately adjacent to a waste canister will have a maximum temperature greater than about 250°C during the first 10 to 20 years following burial of five- to ten-year-old wastes from UO_2 fueled LWRs. (*Id.*, p. 3) The temperature would then decrease to about 150°C after 70 to 80 years and to essentially "normal" temperatures after several hundred years. (*Id.*) It is indicated that detailed calculations are not available for the time-temperature characteristics in salt around high actinide wastes (presumably including spent fuel).

Even with no thermally activated annealing (which apparently does not take place below 150°C), it is believed that the maximum stored energy that would be formed would be about 50 cal/g. (*Id.*, p. 1) The researchers did not conceive a means by which an abrupt release of stored energy could take place, nor did they believe any significant hazard to be possible if the energy were released abruptly through some unforeseen mechanism. (*Id.*)

Although the plastic strain of salt can affect the accumulation of radiation damage in that medium, it was not believed to be significant enough to affect the estimate for the maximum amount of stored energy which could accumulate in the salt. (Penn. State, p. 9) However, since the mechanism of the strain effect is not firmly established, additional experimental information is needed to further characterize the effects of strain on the accumulation of radiation damage in salt under the conditions of interest to the Office of Waste Isolation. (Y/OWI/INF-3/6, p. 13)

Gamma radiation also alters the mechanical properties of salt causing it to assume more brittle characteristics. (Penn. State, p. 73) As much as a five-fold reduction in plasticity of salt may be observed in the first few centimeters surrounding a canister with perhaps a 30 percent reduction occurring at greater distances. (Id.) It may be possible that the reduction in plasticity could slow reconsolidation of backfill or reduce healing rates of cracks. However, the presence of a thermal source tends to increase the plastic flow rate of salt thereby perhaps counteracting the gamma ray-induced embrittlement. (Empson, et al., p. 460)

c. *Chemical Effects*

The United States Geological Survey has stated that: "one of the greatest gaps in current knowledge concerns the chemical interaction between waste and host media". (USGS 1976, p. 3)

The emplacement of radioactive waste in a geological repository will result in the eventual contamination of the host media with foreign chemical species after the canister fails. The effect of the introduced species on the behavior of the host rock is an important

consideration in determining the future performance of the repository. Past conditions of the repository site cannot be extrapolated to make future predictions because all previous phenomena will have occurred in the absence of the newly introduced chemical species. Therefore, an understanding of the reactions of the repository media under the new conditions is essential to determine if future repository performance will duplicate past conditions. Chemical reactions between the waste and host media can also greatly influence the rate at which certain radionuclides are impeded by geologic barriers.

Waste-rock interactions were recognized early as an important factor, in geologic isolation. A number of experiments have been conducted to understand these interactions. Nevertheless the commentary shows that there are remaining significant gaps in the present knowledge.

5. *Sorption and Transport*

Radionuclide transport in a groundwater system is a function of both hydrology and waste-rock interactions. For example, radionuclides do not necessarily travel at the same rate as ground water in a geologic formation due to such factors as sorption. (Ford/MITRE, p. 258) Therefore, radionuclide transport requires an understanding not only of hydrology but also of the geochemical processes affecting radionuclide migration.

Sorption phenomena are viewed as a major barrier providing isolation through delaying the release of nuclides by groundwater flow. However, the knowledge base on sorption is limited. Specifically, the U.S. Geological Survey believes:

- The chemical reactions between the radioactive and natural earth materials have not been characterized adequately in existing transport models. (USGS 1976, p. 4)
- The transport of these contaminants by groundwater in other intergranular media in the presence of hydrodynamic dispersion and chemical reactions is not fully understood. (*Id.*)
- "Sorption and desorption, between the materials surrounding the canister can retard movement of the contaminants. These reactions in the burial environment are not well understood for all the transuranium and some of the other elements which will be contained in the wastes." (*Id.*, p. 25)

The NRC is even more blunt about the state of knowledge:

> *The present capability for estimating the capacity of various geologic materials to retard nuclide movement is limited.* Calculation of radionuclide retardation through sorption is usually treated by use of distribution coefficients (K_d's). Some limitations to currently available K_d data are: (1) there are no well defined, standardized tests which are generally accepted for K_d determination; (2) data which are presently available are limited both in the number of elements and the number of rock types for which K_d measurements have been made; and (3) little is known about the effects of oxidation states on the sorption properties of nuclides. Several studies are underway (Sandia and LLL) to test the importance of the quantitative information in assessment of the retention capability of the re-

> pository. (NRC Responses, p. 1-143, emphasis added)
>
> Knowledge of the ion exchange capabilities of geologic media is limited. . . . Although sorption processes are thought to be important to the long-term safety of a waste repository, *the degree of this importance is not well understood*. For a given disposal site, the importance of sorption will depend on site specific factors, such as local hydrology and distance from the repository to an aquifer location, and non-site specific factors such as waste leach rates. Thus, sensitivity studies which examine the rate of movement of waste to the environment as a function of many factors are needed to determine the relative importance of sorption processes. (NRC Responses, p. 1-145, emphasis added)

Brindley has noted the possible complication of changes in mineralogy due to heating and consequent saturation in sorption capability:

> Prior to possible leakage from buried containers, elevated temperatures around the burial site will develop leading to hydrothermal modification of the surrounding mineralogy. A range of temperature and of mineralogy must be envisaged . . . At near distances from the source high temperature modifications of the clay minerals and high concentrations of radioactive cations may lead to saturation of the fixation capacity. At greater distances, little or no thermal modification of the clay minerals and lower concentrations of eons will permit maximum sorption and fixation. (Penn State, p. 33)

Not all mechanisms will retard the movement of waste. Arthur Piper, a respected hydrology consultant, observed that "other reactions tending to disintegrate

the medium, or to accelerate mobility of waste constituents, are conceivable over the long term. The likelihood of such reactions can be assessed only in regard to a waste of known chemical composition and a specific repository medium." (Y/OWI/SUB-3745/4, p. 9) If reliance on these mechanisms is going to be used in order to assure isolation, then those mechanisms must be understood and their effect on transport quantified.

> In spite of the large body of literature on radionuclide transport, little is known about the transport in low permeability rocks. Wide discrepancies exist in the various K_d values assigned to different radionuclides. Most K_ds have been evaluated from data using soils, unconsolidated sediments, or rocks under laboratory conditions which differ greatly from those of a subsurface terminal storage repository. (Penn. State, p. 21)

In addition, it was indicated that most K_ds are determined in beaker tests over several days, but may not be extrapolated easily to describe the state in 10^6 years. (Penn State, p. 22)

Although neither the USGS nor the NRC have assessed the uncertainties of predictive modeling of waste behavior, the USGS emphasized that:

> In the radionuclide transport model, there is a vast amount of data yet to be collected on the flow path and its properties—especially on chemical effects between the medium traversed and the waste under nonequilibrium and nonisothermal conditions. Included are such effects as ion exchange, precipitation and solution under various conditions of Eh and pH and surface chemical effects in fractured media. (USGS Response, p. 6)

Accurate knowledge of the distribution coefficients (K_d) is important to risk assessment:

> The range in variations in distribution coefficients which describe sorption properties of the transport medium is something that's rather poorly understood, and people like to talk about possible variations of three orders of magnitude—uncertainty of these orders of magnitude. And that makes a rather significant difference in the movement of radionuclides. (Campbell, Tr. 10/27/77, p. 157)

Due to their toxicity and long half-life, the transuranic elements are of particular concern in relation to whether they would be retained by a geologic formation. "Not very much is known about the geochemistry of the transuranium elements, and the little we do know is almost exclusively about plutonium." (OECD, pp. 153, 155)

The chemistry of plutonium is rather complex (J. M. Cleveland, *The Chemistry of Plutonium*, (Gordon & Breach, New York, 1970 as cited in de Marsily, p. 524) and it is believed that in some circumstances plutonium may react with other elements present in water to generate complex molecules that are electrically neutral and that might therefore not be adsorbed. (de Marsily, p. 524)

The NEA Group of Experts has stated that "The underground migration of plutonium colloids through geological formations would be restricted by filtration and surface adsorption rather than by ion exchange. Controlling factors would be the size of colloid particles and the dimensions of the interstices through which the water circulates." (OECD, p. 159) The limited data on americium and curium, two other actinides, indicates that they, like plutonium, form insoluble hydroxocol-

loids at typical pH values of natural waters. (*Id.* p. 155) The absence of ion exchange as a retention factor could mean such colloids would migrate rapidly, depending on the details of the geology.

Studies cited by OECD have indicated that migration of plutonium underneath one of the Los Alamos waste seepage pits has been observed to take place through at least 8.5 meters of tuff, "essentially along fissures in the tuff beds." (OECD, p. 154)

At the Maxey Flats, Kentucky, low-level waste burial site, plutonium has been detected in surface soil, soil cores 90 cm deep, monitoring wells, and in streams which drain the site (Id.) Migration of tens and possibly hundreds of meters in less than 10 years was indicated. (*Id.*, p. 154) The most likely migration paths would be along fractures and joints that are fairly well developed. The high adsorption capacity of the shales in such a case would not constitute an effective barrier since only a small fraction of the water moves through the intergranular interstices. (*Id.*, p. 154) These experiences may not be applicable to repository considerations because of a lack of overburden pressure.

Groundwater flows are not the only transport phenomenon. Another nuclide migration mechanism, largely unaffected by sorption, is gas transport. (NUREG-0116, p. 4-77) NUREG-0116 cites one study which concluded that crushed salt before reconsolidation will not significantly retard gas migration, and that site-specific *in situ* data are needed for bulk bedded salt permeability. (p. 4-77) NUREG-0216 indicates that the migration of tritium and radon through natural bedded salt is not well understood because of the uncertainties regarding permeability and porosity of bulk bedded salt. (p. 3-76) The NRC has said that to evaluate the rate of gas mi-

gration (light gases since it appears that salt is quite impermeable to heavy gases) away from a repository will require site specific data which is not presently available. (NRC Responses, p. 7-125)

Apparently there is much needed data yet to be gathered on sorption before one can be confident of its role as a redundant barrier to waste escape. The importance of having this barrier is apparently in dispute. Brookings has noted:

> There is considerable potential for applying geochemical processes to provide for lock-up of the waste species in a repository. Proper selection of disposal formations and introduction of additional materials can take advantage of the natural processes. (Y/OWI/SUB-76/81726, p. 21)

In contrast OWI is not interested in systems where ion exchange is relied upon for containment. (Y/OWI/SUB-76/81726, p. 28) However, OWI's philosophy of complete containment without inclusion of additional environmental barriers was vigorously challenged at the workshop on Geologic Data Requirements for Radioactive Waste Management Assessment Models in Santa Fe in 1976 at which their view was presented. This group did emphasize sorption as an important barrier:

> It was argued that there are three barriers available: (1) containment by the formation; (2) leach resistance in the event that containment is breached; and (3) nuclide retention by sorption in surroundings. *All of these may be needed* for defense of a selection in public forums. A view shared by a number of persons is that qualification should be based upon the sum of all of the containment barriers. (*Id.*, p. 28, emphasis added)

6. *Rock Mechanics*

Because the formation in which the waste is emplaced is one of the major physical barriers to radionuclide escape, it is important to understand factors that will affect the structural integrity of the formation especially under conditions arising from the presence of the waste. Important factors are the response of the rock to stress loadings and temperature and the characterization of joints, fractures and other imperfections. The rock responses can include creep, flow, folding, and fracturing. An example, is the potential facturing [*sic!*] due to heating.

> In general, heating in the vicinity of waste containers produces a zone of high compression bounded by a zone of circumferential and axial tension. (. . . an analogous case of thermal stresses was documented . . . for larger-scale temperature domains associated with geothermal areas in Iceland.)
>
> Interaction will occur as the temperature pulses of different [waste] cans approach each other and superimpose. This will intensify the stress, and tension fractures may be expected. Later, the compressive pulse may close these fractures if mineralization has not occurred. (Penn State, p. 73)

An outside review group characterized the OWI rock mechanics research effort as having "the essential ingredients for a successful program . . . at hand, especially as regards disposal in natural salt formations." (Y/OWI/TM-20, p. 1) These ingredients "include laboratory studies of appropriate rock deformation, numerical analysis of thermal and mechanical stresses around openings, and *in situ* field tests." (Id.)

For further work relating to storage in bedded salt and salt domes, the review group recommended:

- More attention should be focused on long-term creep effects, and tensile and extensile tasks should be carried out. Most experiments have been performed in "compression whereas in certain parts of mines the stresses are likely to be tensile or extensile." (*Id.*, p. 2)
- "Much more emphasis should be placed on obtaining a sound physical understanding of the mechanical results . . . [to] establish guidance in the development of constitutive relations for future experiments and numerical simulations." (*Id.*, p. 4)
- Tests should be undertaken "to simulate the modes of behavior and of failure at high temperature in pillars and possibly rooms. Knowledge of failure modes at high temperature is currently insufficient and is pertinent to the problem at hand." (*Id.*, p. 5) Bench-scale laboratory experiments should be performed "primarily as support for proposed *in situ* experiments." (*Id.*)
- More extensive efforts should be made to test the adequacy and predictive capabilities of numerical simulation models, in part by predicting and analyzing experiments whose boundary conditions are well-known. "The next step would be *in situ* situations, and back-calculations of prior mine failures. In our view, *it is only when these steps have been taken successfully that predictions of behavior of storage areas may be made with some confidence*." (*Id.*, emphasis added)
- *In situ* experiments are "extremely important and should get underway immediately." Besides the

heater experiment in domal salt at Avery Island, ". . . high priority should be given a second experiment in which sophisticated *in situ* tests are designed to obtain information relevant to rock mechanics . . ." (*Id.*)

- "A series of *in situ* experiments in boreholes and prototype tests of mine components should be conducted to determine the behavior of mine structural components at elevated temperatures." The tests "should be driven thermally to failure and should be modeled thoroughly." (*Id.*) ". . . [B]orehole tests, including closure rates, for potential sites should be initiated in the very near future. (*Id.*, p. 6)

For media other than salt, the review group noted:

- "The problems involved in waste disposal in [shale, limestone, basalt and granite] . . . are very different from those in salt . . . Very little is known of the mechanical properties of these materials under conditions anticipated for the repositories although, in general, they should exhibit semi-brittle behavior in the transient creep regime. Accordingly, we recommend that experimental investigations be initiated on these materials as soon as possible." (*Id.*, p. 6)
- "As regards non-salt rock types, code [i.e., computer modeling] capability is currently insufficient in that coupling between hydrology, mechanical behavior and structural geology is required. . . . *In situ* testing will need to be done following a thorough literature search of studies of physical conditions of deep mines in crystalline rocks. (*Id.*, p. 7)

The review consistently emphasizes the importance of *in situ* tests, as do others:

> Experience has shown that although laboratory data characterizing rock properties are both necessary and useful for preliminary design studies, the behavior of the rock mass ultimately must be determined by *in situ* tests, preferably carried out at about the same depth and in the same formation horizon as would be used for the waste repository. (Y/OWI/TM-25, p. 1)

The rock properties are also affected by impurities which are commonly found in actual formations. For a salt site, specific information would be needed on the detailed chemical and mineralogical composition of the salt strata, including intercalated shales, impurities and entrapped fluids. (USGS 12/76, p. 38) "Because aggregates of solids are mechanically weakened by interstitial liquid, determination of the mechanical properties of brine-bearing aggregates is needed." (Penn. State, p. 65) In addition, contaminants such as calcium sulfate (which is common in salt formations) can cause a decrease in melting temperature with a further change in properties. (*Id.*)

The major deficiencies appear to be a lack of communication between modellers and experimentalists, the use of simplified one-dimensional or linear approximations in modeling when two- or three-dimensional and nonlinear factors could and should be used, and a lack of a staged program from laboratory to benchscale to *in situ* testing to maximize and optimize data accumulation. (Y/OWI/TM-20 and Tr. 10/21/77, pp. 169-185) Although calculations and recommendations can be made on the basis of generic data, the recommendations can be reduced to specifications only when the properties in a particular geologic section at a particular site have been measured. (Russell, Tr. 10/21/77, p. 172)

7. *Repository Sealing*

Shafts, tunnels and boreholes will be constructed into the repository or the repository stratum for a number of reasons: equipment entry, waste canister entry, waste emplacement, ventilation, testing, and exploration. Each time the stratum is entered, its integrity as an isolation medium is potentially compromised. Adequate resealing is essential to restore the geologic barriers. Inadequate resealing will result in a potential short and direct link to the biosphere and, therefore, ". . . techniques and materials must be developed to reseal boreholes, with the assurance that the seals or plugs will maintain their integrity for time periods exceeding the anticipated life span needed for waste isolation or comparable to the lives of rock formations surrounding them." (Y/OWI/TM-24, p. 13)

Repository sealing can be divided into four discrete tasks: (1) location of boreholes drilled prior to repository site selection, (2) backfilling the repository horizon, (3) plugging and sealing both shafts and boreholes, and (4) monitoring seal integrity.

Location of boreholes is especially important in areas drilled during exploration for oil and gas resources. Depending upon drilling laws of the state within which the repository is located, written records of wells may or may not be available.

The Carey Mine at Lyons, Kansas, was not converted to pilot repository operation, in part, because of the number of abandoned deep borings for oil and gas (Piper, 1974, p. 5) and questions about the ability to seal these boreholes. (Zerby, Tr. 10/21/77, pp. 3-4)

A significant problem of solutioning of salt around boreholes was reported in the 1972 analysis of a con-

ceptional design of a proposed repository in Kansas; the study was based partly on the Project Salt Vault experience.

> Within the immediate vicinity of the proposed repository site, a total of 30 oil and gas borings are known to penetrate the rock salt beds. Moreover, in central Kansas literally hundreds to thousands of wells have been made through the salt in search of oil and gas. With this large number of borings, it is not surprising that in a few cases, solutioning of the salt has occurred where the wells have been improperly plugged or sealed or the casing has deteriorated. (ORNL/TM-5764, p. 10-40)

The most extensively investigated example of solutioning around a borehole was 55 miles northwest of Lyons.

> [At this sink] . . . the land surface has subsided at the rate of about 0.7 feet per year, and since 1954 when the depression originated, it has developed into a cavity spreading over an area of some 700 to 800 feet in diameter with a maximum depth of about 20 feet. Exploratory drill holes into the sinkhole have revealed that extensive solutioning has occurred in the upper part of the salt bed with the subsequent collapse of the overlying Permian and Cretaceous age beds. Apparently the sinkhole developed around a single oil well that was first completed in 1936 and later converted to a salt water disposal well. Records of the hole indicate casing deterioration in the salt zone and solutioning before abandonment. (*Id.*, pp. 10-40, 41)

Four cases of salt dissolutioning and subsequent surface subsidence had been reported in central Kansas at the time of the report (1972).

> As is the case for all of these features, the borings serve as a conduit for the overlying freshwaters to migrate downward where they contact the soluble rock salt; the resulting brine then migrates to a deeper permeable zone below the salt. (*Id.*, p. 10-41)
>
> A development program is currently in progress to generate the required information on suitable plugging materials and procedures. Effort at the present time is directed toward a review of the state of the art . . . It is anticipated that this review will lead to a compilation of potentially suitable materials to meet specific requirements which will then be further narrowed by a limited amount of laboratory testing. The immediate objective of this program is to select a suite of the most promising plugging materials and conduct a field demonstration and test in a borehole near, but not necessarily on, the proposed site. (*Id.*, p. 10-42)

The repository may be backfilled with previously excavated material which will be stored on the surface until it is returned to the mine. (*Id.*, p. 16)

Because of the plasticity of salt, backfilled salt will tend to consolidate. However, gamma radiation from the waste canisters reduces the plasticity of salt which could slow reconsolidation of backfill and reduce crack healing rates (Penn. State, p. 73). In contrast, thermal stresses increase plastic flow rates in salt. (ORNL-4555, p. 460) Therefore, two competing processes will be operating. Other opposing effects are the thermal expansion of the large rock mass resulting in the doming of the overlaying strata and the subsidence of these same overlaying strata because of creep in the pillars at the repository level. "The effect of this disturbance on the long-term stability and integrity of a geologic disposal

medium obviously cannot be demonstrated conclusively by experimental methods." (Y/OWI/ TM-24, pp. 12-13) Computer calculations are underway to demonstrate long-term integrity. (*Id.*)

In situ demonstrations of the cleaning out, cementation, and plugging of abandoned boreholes in formations geologically comparable to those of potential repositories are planned. (Y/OWI/TM-24, p. 14) At the present time the long-term plugging of boreholes has not been demonstrated. (Weart, Tr. 10/27/77, p. 69; McClain, Tr. 10/21/77, p. 139) Sandia Laboratories is attempting to develop special cements which behave in the same fashion as the salt itself, in the hopes of developing a plug that will retain the same geologic integrity as the salt bed. The initial test is scheduled to begin in approximately one year. (Weart, Tr. 10/27/77, pp. 121-122)

A borehole plugging program is an element of the National Waste Terminal Storage Program (NWTSP). (Y/OWI/TM-24, pp. 13-14) A review of the state-of-the-art of borehole plugging has been performed by Halliburton Services. (Y/OWI/SUB-76/99068) Gas wells have been plugged successfully for 40 to 45 years. (*Id.*, p. 23) Little information exists on plug durability with time and under various temperatures. (*Id.*, p. 15) Most field experience in borehole plugging is confined to boreholes up to 12 cm. in diameter. (NRC Responses, p. 1-165)

4.3.4.2 *Need for Additional Site Specific and In Situ Testing*

We conclude that in several critical areas — including geologic stability, groundwater flow and hydrology, geochemistry, sorption, and waste-rock interactions — accord-

ing to the statements of the individuals and organizations working on these topics, significant gaps in understanding of fundamental physical phenomena exist and certain essential data are lacking. We do not conclude, however, that this information cannot be obtained.

A significant fraction of the needed data will have to come from *in situ* experiments or requires site-specific information. Chief among the factors requiring site-specific information is hydrology.

Hydrologic characteristics specific to each particular site include hydraulic conductivity of both intergranular pore space and fractures, degree of hydraulic isolation from all water bodies sustaining biota, potential for significant geologic events or climatic changes, vertical gradients in groundwater heads (Y/OWI/SUB-3745, pp. 22-23, 29-30), thermal gradients and other potentials (APS, p. VII-39), groundwater velocity (*Id.*, p. VII-44), and an adequate data base to permit completion of the analysis of groundwater flow and mass transport. (*Id.*, p. VII-4) Because ". . . little is known about the characteristics of flow through fractured rocks . . . techniques for determining in-situ the number and distribution of joints and fractures at a particular site and their influence on the permeability are critically needed." (USGS 1976, p. 75)

Waste-rock interactions also require site-specific data. According to the NRC:

> Detailed analysis of radiolytic or thermal effects in a repository requires site specific data for a number of properties of both the near and far field media. Some of these properties are listed below.
>
> Near field only:
>
> — gas generation rates and the chemistry of evolved species from irradiation of brine, impure salt and canister corrosion products;

— radiation damage annealing characteristics of salt;
— mechanical properties (elasticity, plasticity);
— thermal properties (conductivity, specific heat, density, expansion, etc.);
— geohydrologic properties (permeability, porosity, head distribution, etc).
— geologic properties (stratigraphy, mineralogy, etc.)

Many of these individual properties are best measured in the laboratory; some can only be measured *in situ*. For instance, the detailed composition of evolved species resulting from irradiation of brine can best be measured in the laboratory but site-specific brine should be used. Hydraulic heads can only be measured in the field. Because of the site specific nature of the needed data, this detailed *information will only be available as a candidate site is explored in detail.* (NRC Responses, pp. 1-148, 1-149, emphasis added.)

Fairchild and Russell of the Office of Waste Isolation regard *in situ* experiments as a necessary ingredient of repository design.

> Experience has shown that although laboratory data characterizing rock properties are both necessary and useful for preliminary design studies, the behavior of the rock mass ultimately must be determined by *in situ* tests, preferably carried out at about the same depth and in the same formation horizon as would be used in a waste repository. (Y/OWI/TM-25, p. 1)

Rock stresses and deformations change with depth. In addition, subsurface rocks at depth may have different mechnical and chemical characteristics than surface rocks because of the absence of weathering. (*Id.*, pp. 6-7)

The Rock Mechanics Review/Workshop sponsored by OWI observed that:

> This part of the disposal program [*in situ* experiments] is extremely important and should get underway immediately as it will provide the key information concerning the utility of laboratory and numerical approaches to design criteria . . . we suggest that high priority be given a second experiment [other than Avery Island], preferably in a potential site for a repository, in which sophisticated *in situ* tests are designed to obtain information relevant to rock mechanics and hence design criteria. (Y/OWI/TM-20, p. 5)
>
> The most sophisticated and most expensive type of in situ experiment is the vault experiment. . . . To date, the only vault test that has been conducted has been Project Salt Vault in the bedded salt at Lyons, Kansas. (Y/OWI/TM-25, pp. 7-8)

An underground experiment (a less sophisticated experiment than a vault experiment) is being conducted at Avery Island, Louisiana. The experiment "will consist of placing canned electrical heaters in sleeves in dome salt to simulate the thermal characteristics of actual radioactive waste emplaced in a retrievable configuration." (Y/OWI/TM-25, p. 11)

> The overall objectives of the Avery Island *in situ* experiments are to reconfirm and validate the Project Salt Vault results for dome salt deposits as compared to the bedded salt of the PSV Permian Hutchinson Formation, to obtain data that were not provided during PSV, and to provide additional criteria for the design of a federal repository in salt. (*Id.*)

Planned heating experiments include a near-surface heater experiment in the Conasauga Shale on the Oak Ridge Reservation, and a heating and rock mechanics experiment in hard crystalline rock in the abandoned Stripa iron mine in Sweden.

Another series of experiments in bedded salt is planned at the Waste Isolation Pilot Plant near Carlsbad, New Mexico. However, this program is still in the planning stage, the funding for the experimental programs has not been approved, and the earliest that underground experiments could be done is the mid-1980's, 1983 or 1984. Attempts will be made to have the experimental area developed as soon as possible because some experiments require long lead times. (Weart and Davis, Tr. 10/27/77, p. 116)

Specifically, *in situ* tests on migration are planned at the Waste Isolation Pilot Plant site:

> We'll be looking at the various phenomena and making observations on the transport of radioactivity through the salt. There are several mechanisms that have been envisioned, some are in study in the laboratory, some of them are highly dependent on gross features like bedding planes and intergrain boundaries, and so it's a subject that needs to be studied in situ on a relatively grand scale rather than on a small laboratory scale in order to have confidence in those results. (Weart Tr. 10/27/77, p. 115)

The U.S. Geological Survey includes intercalated shales, impurities, entrapped fluids, and detailed chemical and mineralogical composition of the salt in the list of *in situ* information required. (USGS 1976, p. 38)

Transport and sorption phenomena have been studied in laboratory situations and an expanded program to collect "generic" migration data for various media has been undertaken; data are expected by late 1979 (NRC Responses, p. 1-147) However, Apps of the Lawrence Berkeley Laboratory questions the validity of K_ds measured in the laboratory for describing sorption around a repository. (Penn. State, p. 21)

Repository sealing will also require *in situ* experimentation. Weart indicated there were considerable benefits, in terms of cost and efficiency, to performing the sealing tests once they get underground. (Tr. 10/27/77, p. 122) OWI intends to do *in situ* demonstration of borehole plugging and also borehole transport studies. (McClain, Tr. 10/21/77, p. 137a) McClain felt these field demonstrations were essential. (Tr. 10/21/77, p. 139)

Finally, in order to determine the properties of a geologic formation, ultimately it will be necessary to *enter* the proposed formation and look at the rocks "face-to-face." (Weart, Tr. 10/27/77, p. 124) The National Academy of Sciences Committee also concluded that:

> . . . *no reasonable amount of exploration from the surface can conclusively demonstrate the safety of waste storage in deep vaults*. Essential for such demonstration is *in situ* inspection and testing of the rocks in which vaults might be constructed. (NAS 1972, p. 4, emphasis added)

Although some information can be obtained from the surface, validation must ultimately come from underground experiments.

> . . . in qualifying the earth and qualifying specific underground information, you have two ways to obtain the information—from the surface and from below the surface.
>
> From the surface, you can get a certain degree of qualification. But at some point in time you have to get to the sub-surface and actually have a demonstration facility . . . *in order to fully demonstrate a facility you have to go to the underground prototype*. (Deju Tr. 10/11/77, pp. 81-82, emphasis added)

Therefore, *in situ* investigation and rigorous confirmation of formation properties is essential to validation of the feasibility of geologic disposal.

4.3.4.3 *Data from Previous Experiences*

Several experimental and one natural situation might be cited as providing the confirmatory evidence for geologic disposal feasibility. These experiments are Project Salt Vault, the Asse Mine repository in Germany, the burial of waste-containing glass below the water table in Canada at Chalk River, and the Oklo natural fission reactor. Each of these situations is important, but even in aggregate they do not add up to a confirmation of feasibility.

1. *Project Salt Vault*

Project Salt Vault was a test of the disposal of high-level radioactive waste solids in an inactive salt mine in Lyons, Kansas, under the auspices of the Atomic Energy Commission.

The radioactive material used in the test consisted of 14 irradiated Engineering Test Reactor fuel assemblies contained in seven cans. (ORNL-4555, p. 13) To increaase the radiation dose received by the salt, the assemblies were exchanged for freshly irradiated assemblies at six-month intervals. The first cans were placed in the mine in November of 1965 and radioactive operations were terminated in June, 1967. (Empson, *et al.*, p. 455) A total of about four million curies of fission product activity in 21 containers had been transferred into and out of the mine by the end of the test. (ORNL-4555, p. 162)

In addition to the fuel assemblies, an array of electrical heaters was operated as a control. Also, one pillar was heated to yield information on the creep and plastic flow

of salt at elevated temperatures. (*Id.* pp. 172-190) Results were not always definitive because of heater malfunctions. (*Id.*, p. 129)

The engineering and scientific objectives of Project Salt Vault were: (1) demonstration of waste handling equipment and techniques; (2) determination of possible gross effects of radiation on hole closure, floor uplift, salt-shattering temperature, etc., in an area where salt temperatures were in the range of 100 to 200°C; (3) determination of possible radiolytic production of chlorine; and (4) collection of information on creep and plastic flow of salt at elevated temperatures which could be used later in the design of an actual disposal facility. (*Id.*, p. 318)

Experimental measurements included salt temperatures, salt radiation dose, radiolytic gas production, thermal expansions of floor and pillars, and stress and stress changes in pillars and other parts of the formation. (*Id.*, p. 319)

Project Salt Vault developed important information in various areas relative to geologic waste disposal such as thermal stress transfer; migration of brine inclusions; waste and equipment handling techniques; the influence of shale partings in bedded salt on the nature, direction, and amount of accelerated plastic defo. nation caused by elevated temperature; and radiolytic generation of oxidizing gas.

The tests done during the operation of Project Salt Vault required the manipulation of 21 canisters of ETR spent fuel during both emplacement and retrieval operations. The completion of the handling operations led to the conclusion that Project Salt Vault successfully demonstrated the feasibility and safety of handling

highly radioactive materials in an underground environment. (*Id.*, p. 355)

The information obtained constitutes only a portion of the factors which should be considered. Not included were parameters concerning potential nuclide migration rates and pathways in case of a repository breach, studies on decommissioning the repository and certain interactions between the waste and the salt. There is still much uncertainty over parameters affecting long-term repository effectiveness (see Section 4.3.4.1 on adequacy of knowledge).

The rock mechanics instrumentation of the heating experiments in Project Salt Vault produced some "surprising" results:

> The immediate response to the initial heating of the anchors at a distance of 25 feet below the floor (i.e., 13 feet below the heater zone) and the magnitude of that movement, amounting to several tenths of an inch, is somewhat surprising. . . . (*Id.*, p. 343)
>
> Similar phenomena are not unusual in most mines in bedded salt and are commonplace in other salt mines in the vicinity. However, the acceleration of the sag, by a factor of approximately 5, immediately after the array heater power was turned on was unexpected. . . . (*Id.*, p. 343)

Even the repository design information may be of limited applicability to other sites because of the uniqueness of geological formations, especially the presence and locations of thin shale partings. These provided a lubricated surface, and the deformations were much larger than initially anticipated. (*Id.*, p. 348)

In discussing the Project Salt Vault tests, the NRC Task Force stated that:

> These tests were sufficient to determine the active land requirements (but not buffer zone requirements), to indicate that interaction of canisters with the disposal medium is an area of concern, and to demonstrate successful emplacement methods and equipment. (NUREG-0216, p. 3-63)

A major conclusion of the final report on Project Salt Vault is:

> These tests were sufficient to determine the active land requirements (but not buffer zone requirements), to indicate that interaction of canisters with the disposal medium is an area of concern, and to demonstrate successful emplacement methods and equipment. (NUREG-0216, p. 3-63)

A major conclusion of the final report on Project Salt Vault is:

> . . .that most of the major technical problems pertinent to the disposal of highly radioactive wastes in salt have been resolved. (ORNL-4555, p. 355)*

---

*However, the next few sentences read:

> Project Salt Vault successfully demonstrated the feasibility and safety of handling highly radioactive materials in an underground environment. The stability of the salt under the effects of heat and radiation has been shown, as well as the capability of solving minor structural problems by standard mining techniques. The data obtained on the deformational characteristics of salt have made it possible to arrive at a suitable design for a mine disposal facility.

Clearly, the intent of the authors was that the "major technical problems" resolved were items mentioned in these three sentences. From the prior discussion in earlier sections of the present report, it is clear that the items listed were not all of the major problems which need to be examined. Moreover, USGS has expressed reservations about the completeness of the Salt Vault data as is discussed above. In a later publication the Office of Waste Isolation states that, "*Preliminary* in situ [heat and radiation] tests have already been completed for one bedded salt formation but still have to be completed for other formations of interest." (Emphasis added.) (Y/OWI-8, p. 10.)

William W. Hambleton, Kansas State Geologist, who has extensively analyzed the results of Project Salt Vault, said that "the jury was still out" on the general concept of burial of nuclear wastes in salt. (*Technology Review*, March/April 1972, p. 18) The U.S. Geological Survey recently expressed reservations about the extent of present knowledge including that gained during and since Project Salt Vault:

> Although salt *may eventually turn out to be a suitable medium* for disposal, there are, at present, a number of serious problems which would have to be resolved before one could confidently predict successful long-term repository operation. (USGS notes, p. 2, emphasis added.)

The problems which would need to be resolved include:

a. Relatively small amounts of impurities can cause changes in the properties of salt such as lowering melting temperatures and mechanical strength. (*Id.*, p. 2)

b. Naturally occurring rock salt is not completely dry and small amounts of water can have a disproportionate weakening effect on salt. (*Id.*, p. 3)

If impurities are present, either those occurring naturally or introduced from the waste, or if the temperature is higher than 0° C. (meaning even more salt is dissolved in the brine), then the same amount of water has a larger effect. (USGS Responses, pp. 10-11) As with all potential disposal media, there are fewer problems with salt as long as it remains completely dry. In salt systems, however, the introduction of even small amounts of water at elevated temperatures could cause serious

loss of mechanical strength, loss of retrievability, and conceivably, movement of waste. (*Id.*, p. 11)

c. Brines are also highly corrosive and would eventually destroy metal canisters and cladding and begin leaching the waste. (*Id.*) Brines probably have a low fixative capacity for elements from the waste, although there are few data available. (USGS notes, p. 3) Many of the nuclides, because they remain in solution, would thus be freed for potential transport if the repository site were to be breached (USGS Responses, p. 11) and there would be no immediate "backup" process to take the waste out of solution. (USGS notes, p. 3)

Presently the USGS is doing experimental work on the chemistry of salt-brine systems which they believe to be necessary in order to predict the performance of a salt repository over the various time frames of interest. (*Id.*, p. 3)

In light of the above-mentioned "serious problems which would have to be resolved before one could confidently predict successful long-term repository operation" it is evident that Project Salt Vault did not provide adequate information on all parameters of interest.

The GAO expressed a belief that 5 or 10 years of experimentation in the retrievable mode at a repository may not be sufficient to assess all of the effects of heat-producing high-level waste on the geologic medium and to establish sufficient data to make valid extrapolations of long term risks. (GAS 9/9/77, p. 20) Hence, it may be inferred that a two-year test period for Project Salt Vault did not provide sufficient data to allow confident long-term extrapolations.

In order to gain further confidence in the data base for commercial waste activity, experiments are planned at the Waste Isolation Pilot Project (WIPP) facility in New Mexico. (Weart, Tr. 10/27/77, p. 117) Although the facility is primarily for military low-level and transuranic waste, the experimental aspects are "primarily tied in with the high-level activity where there's a greater degree of unknown." (*Id.*) Experiments will include studies of transportation and migration of fission products, chemical and physical effects, structure and mine monitoring, and engineering studies. (*Id.*, table, p. 115A)

Because of the remaining questions concerning adequacy of salt as a repository medium and the limited nature and extent of tests done at Salt Vault, it cannot be considered a sufficient demonstration of high-level waste disposal technology.

2. *Asse Mine*

In 1965, the Asse salt mine, a potash and salt mine opened in 1905, was set up as the national development and test facility for disposing of solid radioactive wastes in the Federal Republic of Germany. Disposal of drummed low-level wastes began in 1967 and about 66,000 drums had been emplaced as of June 1976. (Lieberman, *et al.*, Tr. 3/21/77, p. 429) In addition, about 1,000 drums of intermediate level wastes were emplaced from 1972 to 1976. (*Id.*)

The mine will not be used as a repository for high-level and alpha-bearing wastes, but will only serve as a test facility for that purpose. (Kuhn, *et al.*, p. 291) Until March 1976, "no great effort has been made. . .in the direction of the disposal of high-level wastes" (*Id.*) However, experiments simulating decay heat production

using electrical heaters have been performed (Hagen, Tr. 4/19/77, p. 8) and the computer programs for heat dissipation problems have been developed. (Kuhn, *et al.*, p. 291)

According to Kuhn:

> [The] . . . disadvantages that restrict the development of the Asse Salt Mine as a final repository for large quantities of especially high-level and alpha-bearing wastes [are]:
>
> It is not completely possible with the currently available methods of measuring and calculating to prove and predict for some thousand years the rock-mechanical stability of a complicated underground system of chambers, pillars, and safety roofs situated above and beside each other.
>
> . . . There is a thick seam of carnallitic potash salt in the Asse anticline. . . . By heating this mineral [carnallite] to temperatures above 100°C dehydration water is set free, at temperatures above 165°C sometimes even hydrochloric acid. In addition, carnallite creeps extraordinarily under stress thus having a very low strength. . .
>
> . . . From our knowledge of the history of potash and salt mines in Germany we cannot completely exclude that the Asse Salt Mine will be flooded at some time. This happened in 1906 to the mine Asse I, which is situated 1.5 km to the west. However, the reasons for this flooding were inadequate knowledge of the geology and mining and thus human failure. (Kuhn, *et al.*, p. 288)

It is planned to emplace carbide fuel elements from the AVR high temperature gas-cooled reactor in the Asse mine after that reactor shuts down. (Lieberman, *et al.*, Tr. 3/21/77, p. 430) Although these fuel elements are

associated with substantial radiation, ". . .the decay heat situation is of minor consequence. Thus, the wastes are not truly equivalent to solidified high-level wastes. . . ." (*Id.*)

Weart of Sandia commented on the Asse Mine:

> We would never in the world in this country—at least I wouldn't—start from scratch to develop a repository in something like the salt anticline where the Asse Mine is. And I think if you ask the physicists and the people in charge, they say that if they were starting from scratch, they wouldn't either. . . . The salt anticline is extremely distorted and has a number of layers which are not salt, shales in the anticline structure. . . . They [the Germans] haven't been as aggressive in doing experiments in their facility as they would like to have been. While they've been disposing of [low-level] waste for ten years, they're only now starting to conduct some experiments that we'd be very interested in seeing data on. (Tr. 10/27/77, pp. 125-6)

The demonstration of high-level waste disposal implies that phenomena in several areas of concern are understood through hypothesis, testing, verification, etc. Since extensive testing programs have not been carried out in the Asse mine relative to high-level waste disposal (except with the possible exception of heating tests), it is difficult to conceive that any demonstration of technology has taken place. This is especially true when one considers that handling, emplacement and isolation functions must all be demonstrated. To date, only the first two have been demonstrated and only for low and intermediate level wastes. In fact, ". . . a test

disposal operation of solidified high-level wastes in the Asse Salt Mine is not planned until the early eighties." (Kuhn, *et al.*, p. 291)

3. *The Oklo Phenomenon*

Reassuring data have been reported from the Oklo natural fission reactor concerning isolation of radioisotopes in a geological setting, but this case does not demonstrate isolation technology.

French scientists have determined that a natural fission reaction took place in six zones within a rich deposit of uranium ore in the Republic of Gabon, West Africa, about two billion years ago. (Lieberman, Tr. 3/21/77, p. 431) The nuclear chain reactions were sustained over a period of about 600,000 years, with an average thermal power of 25 kilowatts, producing about 10,000 pounds of fission products and 4,000 pounds of plutonium. A different estimate of the amount of reaction products was given by Lieberman (Tr. 3/21/77, p. 431) who said that "It is now known that about 15,000 megawatt years of fission energy was involved, that about 6 tons of fission products and 2½ tons of plutonium were formed. . . ."

Analyses of the reaction products found in the area have given an indication of their migration behavior in that particular setting over geologic time, an opportunity which could never be afforded by any laboratory experiment. Indications are that ". . .at least half of the 30-odd fission-product elements have remained immobilized in the ore. . . . Metals with a valence of one or two have a relatively high solubility in water and are readily leached away; hence, the rubidium, cesium, strontium, barium made in the reactor, and probably the cadmium, have for the most part disappeared" (Cowan,

p. 38), although it was determined that little of the strontium-90 was transported from the vicinity of the reactor over the period of its half-life. (*Id.*, p. 38) Due to the small quantities of other fission products, their fate has not yet been determined. (*Id.*, p. 39) Data so far available indicate that uranium, thorium and the rare earth elements were effectively immobilized. (Y/OWI-8, p. 94) One additional observation with important implications for geologic waste disposal is the fact that ". . . plutonium was completely immobilized for times comparable to its half-life of 24,400 years." (Cowan, p. 45) Therefore, "the retention of plutonium is to be expected for geochemical environments similar to Oklo; only by mechanical disintegration and colloidal transport or by organic chelation would mobilization be expected." (Y/OWI-8, p. 94) Brookins (Y/OWI/SUB-76/81726, p. 20) reported that:

> Plutonium was retained in uranium crystals at Oklo because of favorable oxidation potential (Eh-pH) conditions resulting in retention of Pu in almost solid solution with U. . .On the other hand, some uranium did migrate at Oklo. This and observed migration of molybdenum can be explained by considering oxidation states and the related geochemical environment . . . What one sees at Oklo is a shale and not a very good one at that. Retention of radionuclides and their stable daughter products in the formation is significant. This gives hope that criteria can be developed for a more proper assessment of better quality shales as a repository.

The Oklo mine has provided us with the results of a "field experiment" whereby the degree of stability of various ions in natural conditions over periods of geologic time may be deduced. Rather than demonstrate conclusively that effective immobilization is possible in

different geological environments, the Oklo experience has shown that under the geological and geochemical conditions of that site, such immobilization is possible. As Lieberman, *et al.*, pointed out in their testimony submitted to the Commission:

> It is *possible* that the results of the above investigations [at Oklo] will lead to the conclusion that for *certain* geologic settings the geophysical and geochemical processes would be, in themselves, an adequate barrier for the protection of man and his environment from radioactive wastes. (Tr. 3/21/77, p. 65, emphasis added)

Since ". . . the geochemical behavior of many reactor products is not well known, particularly for the non-ideal conditions usually encountered in geological settings . . . it is necessary to develop a theoretical basis for understanding the behavior of fission products and actinide elements." (Y/OWI-8, p. 90)

The Expert Group of the OECD Nuclear Energy Agency concluded that "it will be necessary to learn a good deal more about the geochemistry of the transuranium elements before a confident extrapolation of the Oklo information to different geological environments will become possible." (OECD, p. 155)

The temperature of the Oklo reaction has been estimated as "probably under 200°C" by Apt, *et al.*, who stated, "From a geochemical migration standpoint, the temperature characteristics of the system are important, and definitive studies on this topic are sorely needed." (Apt, *et al.*, p. 202)

They attribute the minimal dispersion at Oklo to the following factors:

> First, geophysical and tectonic conditions of the Francevillian basin [the sedimentary basin contain-

> ing Oklo] were such that major disruption did not occur for nearly half the age of the earth. . .only in recent geologic time has the deposit been uplifted to such an extent that erosional processes could be important. . . . Second, the geochemical conditions at Oklo provided an effective barrier to radionuclide dispersal. . . . The physical stability of proposed disposal sites is receiving careful study. However, it is equally important to establish the geochemical environment of each location and to successfully predict the chemical stability of the deposited radionuclides. (*Id.*, p. 204)

One especially important question which the Oklo phenomenon leaves unanswered is whether or not man has the ability to choose a geologic and geochemical setting capable of achieving the degree of isolation provided by the particular environment at Oklo, especially since the integrity of the formation would of necessity have to be compromised in order to enter and emplace waste and since the waste chemistry will be different from the Oklo case. For example, the Oklo experience was basically with crystalline solids, while some waste may be in the form of glass. On the other hand, ". . . since spent fuel is practically all in uraninite form, the experience of uranium ore retention is particularly relevant." (Leachman and Bishop, p. 5)

Leachman and Bishop, in considering the Oklo phenomenon and its relevance to disposal of man-made wastes, stated:

> Any reliance on the proven performances of natural and inadvertent experiences with wastes requires that man-formed wastes mimic those of nature, both in their composition and in their surrounding environment. For this purpose, it is important both to develop models for confidently mimicing [*sic!*]

> nature, and if successful, to convincingly present these to the public and government officials for their evaluation. (Leachman and Bishop, p. 4)

Other potential natural reactor sites are being sought in Precambrian ore bodies in Australia and Canada; although data reduction is not complete, ". . . indications so far are that no new natural reactors have been discovered." (Y/OWI/INF-3/3, p. 11)

4. *Chalk River*

In 1965, the Chalk River Nuclear Laboratories (CRNL) in Canada produced 25 nepheline syenite glass blocks containing about 300 curies of aged fission products and buried them below the water table in the CRNL waste management area. (Merritt, p. 27)

When early results showed leach rates were too low to be readily measureable, [*sic*] a second group of 25 blocks containing 1100 curies of aged fission products was buried in 1960 in a similar location, but in a tighter grid.

The burial of the glass provided valuable leaching and migration data. The ground water downstream from the blocks has been sampled regularly and analyzed radiochemically. In 1963, 1966, and 1971, soil samples were taken from downstream of the blocks and the patterns and concentrations of radioactivity which had left the blocks were determined. (*Id.*) The amount of strontium-90 leached from the second set of blocks in 15 years was 1.5 millicuries, 90 percent of which was leached during the first two years. (*Id.*, p. 30) From 1969 to 1976, the amount leached remained essentially constant. Sampling in 1971 showed that strontium-90 had migrated 33 meters from the glass blocks. As of early 1970, no strontium-90 had been detected in the

water samples taken downstream from the first test disposal area.

The test as a whole did not take into account certain potentially critical parameters and did not reflect conditions which would be encountered in a deep geological repository.

Merritt of CRNL stated that the leach rate data "only hold if the glass is actually buried beneath the water table and in a configuration such that the groundwater temperature is not significantly increased." (*Id.*, p. 32) Laboratory results have shown that high water temperatures increase the rate of leaching considerably (Ref. 3 in *Id.*, p. 33) and it has also been shown that devitrification of the glass (which happens when crystals form in glass at high temperatures) will also increase the leach rate. (*Id.*)

The temperature of most of the salt in the vicinity of a waste canister in the repository will reach peak temperatures in excess of 200°C and the salt immediately adjacent to a canister may exceed 250°C. (ORNL-5058, p. 53) The tentative centerline temperature limit for the glass in the canister is 800°C, well above the temperature at which maximum devitrification occurs (700°C). (McElroy, *et al.*, Tr. 3/21/77, p. 603) The outer portions of the glass will remain vitrified, however, due to lower temperatures.

Questions concerning the stability of high-level waste-containing glass over long time frames cannot be answered using data from the Chalk River tests.

The test glass contained fission products and some uranium but no other alpha emitters, such as plutonium-239. The effect of such alpha-particle irradiation and its associated heavy daughter recoil are of concern over

both short- and long-term storage (CONF-770102, p. 243) due to the large number of displacements generated. In assessing radiation effects, accelerated tests have shown that the irradiation received by the glass has no effect on the leaching rate (Merrit, p. 33), it is difficult to draw definitive conclusions since alpha-particle irradiation from actinides did not take place. Others believe that radiation and radiation-induced damage could result in increased leachability. (CONF-770102, pp. 244-245)

The details of these four experiences clearly establish that while the data is useful it is not sufficient to confirm the geologic isolation concept.

4.3.4.4 *Finding a Site with the Right Conditions*

While geologic disposal is conceptually appealing, the critical prerequisite, so far not satisfied, is to locate a specific site possessing the desirable features required. This task requires first defining and quantifying these desirable characteristics. Being able to find and confirm the suitability of a site is an essential part of the demonstration of the technology. It is the analog of being able to build a piece of equipment in order to check out whether a theory can be confirmed in practice. But since we cannot construct geologic settings to suit our needs, the task is to find the right assemblage of conditions coexisting in nature in one location. A perspective on the ability to achieve this objective can be gained from an examination of past attempts and current efforts.

a. *Past Attempts*

Sites for waste repositories have been proposed several times in the past. While the Lyons, Kansas, site is remembered for the public opposition it generated, it was only one

of many attempts to find a repository site. To the best of our knowledge, the first suggestion to use a geologic formation for the containment of radioactive waste was made in 1951. (NAS 1972, p. 7) In 1955, a multidisciplinary committee considered various problems of radioactive disposal on land and proposed disposal methods including burial in salt, deep-well disposal in permeable formations, and conversion of liquid wastes to solids. (NAS 1966, p. 2) Although almost three decades have elapsed since the earlier suggestion, the first permanent waste disposal site has not been selected, and "the relative risks of various disposal alternatives in different hydrogeological environments have not yet been determined." (DeBuchananne, Tr. 3/22/77, p. 28)

b. *Current Programs*

The search for suitable disposal sites which began approximately in 1951 continues today. So far the only site now under serious consideration is for the disposal of military TRU wastes at the WIPP site in New Mexico. The major feature of the current search is a much more thorough attempt to specify suitability criteria and to refine those criteria with technical studies. The search for a site for commercial waste disposal is being conducted under the National Waste Terminal Storage Program initiated in mid-1976. The WIPP program is a separate activity.

National Waste Terminal Storage Program. The objective of the NWTS Program is "To provide facilities in various deep geologic formations at multiple locations in the USA which will safely dispose of the commercial radioactive waste. . . ." (Zerby, Tr. 10/21/77, p. 2a) The schedule calls for identifying two repository sites by October, 1979. (Zerby, Tr. 10/21/77, p. 18) These first two repositories are expected to be in salt formations. (*Id.*, p.

62) A target has been set by Presidential policy to have a licensed repository by 1985. (President's Statement on Nuclear Policy, October 28, 1976)

The process of site choice and confirmation is an interrelated function of the activities of three agencies. DOE is to select the actual site, but "suitability" criteria are set through actions of NRC and EPA and suitability is to be confirmed through an NRC approval. EPA is to set a generic "environmental standard" for waste disposal which, at least in concept, establishes some general bounds for the performance of a repository. (Kuhlman, Tr. 3/24/77, p. 80; Channell, Tr. 3/24/77, pp. 162-163) NRC is to translate these general bounds into more specific criteria and standards. Many of the activities are proceeding in parallel in order to meet the 1985 target.

In order for NRC to meet the DOE schedule, EPA must issue general environmental standards for high-level waste in final form in mid-1978. (*Id.*, p. 80) NRC will have to provide guidance on site suitability criteria and pre-application site description requirements to DOE by the fall of 1978. (Cunningham, Tr. 3/24/77, pp. 130, 138)

The importance of criteria should not be ignored. As Cunningham of NRC stated:

> To judge the acceptability of any proposal for the management of nuclear wastes, a set of criteria is needed against which to measure the proposal. The procedures for licensing a federal repository are not in themselves adequate without these criteria. (*Id.*, p. 127)

The NWTS program is currently divided into three efforts: a broad site search by the Office of Waste Isolation (Union Carbide Co., Nuclear Division), an evaluation of the Pasco Basin Basalt beneath the Hanford Reservation in Washington State, and a similar evaluation of the Nevada Test Site. (Tr. 10/21/77, p. 5)

OWI Activities. The OWI program originally examined sites in 36 states in four media, but no candidate sites have been announced. (Tr. 10/11/77, pp. 9-10) Now, however, the role of OWI has since been reduced to looking principally, as noted above, for two repositories in salt. (Tr. 10/21/77, p. 5; *Energy Daily*, 12/09/77, p. 1) (OWI Engineering and geologic coordinations are continuing in non-salt rock types, though. (Id., p. 6) A number of rock salt deposits have been identified by the USGS. (cf. Y/OWI/TM-13, p. 33) Although none of these deposits have been rejected from consideration (Zerby, Tr. 10/21/77, p. 50), the salt formations of the Virginia River, the Sevier Basin, the Green River Basin, the Williston Basin, and of South Florida are either small or deep deposits. (Lomenick, Tr. 10/21/77, pp. 58-60)

The major interest is in the salt deposits of the Permian Basin, Paradox Basin, Salina Basin, and the Interior Gulf Coast Basin. (Id., pp. 60-66) These formations are in the states of Kansas, Colorado, Oklahoma, Texas, and New Mexico (Permian Basin), Utah and Colorado (Paradox Basin), Michigan, Ohio, West Virginia, Pennsylvania and New York (Salina Basin), and Texas, Louisiana and Mississippi (Interior Gulf Coast Basins). We therefore anticipate that the first two repository sites will be in one or two of these thirteen states. (cf. also GAO 9/9/77, pp. 15-16)

The NWTS selection process is complicated by the fact that 14 states have passed laws prohibiting or restricting the disposal of radio-active wastes within their boundaries. This legislation might block or at least delay a repository siting action. Of the 13 states listed above, the following states in some way restrict radioactive waste disposal:

Louisiana: Act No. 193, Laws of 1977. Prohibits disposal of radioactive wastes in salt domes (July 7, 1977).

Michigan: A law prohibiting the disposal or storage of nuclear waste, except spent fuel, has passed the House.

New Mexico: Chapter 122, Laws of 1977. Prohibits the disposal within the state of commercial radio-active material generated outside the state (expires March 31, 1978).

Texas: H-1560. Prohibits permits for the discharge into water of high-level radioactive waste (June 15, 1977).

The State of Kansas probably can be eliminated from the list because of the controversy surrounding the Lyons site and its eventual abandonment. Therefore the list of 13 states is reduced to a list of 8: Colorado, Mississippi, New York, Ohio, Oklahoma, Pennsylvania, Utah, and West Virginia. We have made only a broad brush assessment of state institutional controls; others of these states might be added or deleted from the list depending on the course of future legislation.

The General Accounting Office regards public and political acceptance as the biggest obstacle to be overcome in resolving the waste disposal problem. A technically sound waste management program may not be adequate because of public perception of the risks of nuclear waste disposal (GAO 9/9/77, p. 15). Public pressures may force the siting of waste repositories on federal reservations. Some states may even object to repository siting on federal land within their borders. Surface ownership of land is not sufficient to assure public acceptance as indicated by the resource conflicts at the WIPP site. (Tr. 10/27/77, pp. 25-36)

In addition to resource conflicts, the WIPP site and the two potential repository locations exhibit serious geologic

uncertainties, discussed below, which must be resolved prior to their acceptance as repositories.

Nevada Test Site (NTS). Several of the rock types at the NTS have been suggested as promising host formations for radioactive waste repositories. An obvious advantage of the NTS is that it is a federal reservation that must be closed to future non-military uses because of the extensive weapons testing program of the past.

An exploratory program to evaluate the suitability of the Eleana Formation, which is a series of argillites, quartzites, and conglomerates, was begun in May, 1976. The formation is at least 3,000 meters thick. The argillite units have a number of favorable properties such as high plasticity, high density, apparent low interstitial permeability, and lateral continuity. (Y/OWI-8, p. 55) Unfavorable characteristics of the formation are its structural complexity due to thrust faulting, lack of hydrologic data, relatively low thermal conductivity, and content of "deleterious minerals such as pyrite and organic carbon". (Y/OWI-8, pp. 53-59; MacKay, Tr. 10/27/77, p. 42; Zerby, Tr. 10/21/77, p. 5) "Folds, thrust faults, and normal (dip slip) and lateral (strike-slip) faults are present throughout the Eleana." (Y/OWI-8, p. 54)

In addition, although the Test Site "apparently lies outside of presently active major seismic belts and is designated seismic risk zone 2, small earthquakes of magnitude less than four have been relatively common" and there is concern that migrating seismic activity could lead to higher seismicity at the Site in time. (USGS 1976, pp. 85-86) Nuclear weapons tests in the area presently create seismic disturbances. (MacKay, Tr. 10/27/77, p. 43)

Three granitic stocks (intrusive igneous bodies) at NTS are candidates for future study. (USGS 1976, p. 94) In order

to determine thermally-induced rock stresses and *in situ* thermal conductivity, a series of tests, known as the Climax Stock Heater Tests, is planned in the granitic formation within an existing deep chamber at a depth of 1,400 feet.

Hanford Basalt. Studies were started in 1968 to assess the feasibility of disposing of high-level radioactive wastes in caverns excavated in the Columbia River basalt underlying the Hanford Reservation. The project was suspended in 1972 before completion of the interpretive work. In early 1976, OWI funded the interpretation of the earlier studies. (Lieberman, Tr. 3/24/77, pp. 444-445) In 1977 a Waste Technology Program was established at Rockwell Hanford Operations to provide the technology for the geologic isolation of spent fuel in basalt. (Tr. 10/11/77, p. 122)

Dr. Raul A. Deju, Manager of the Department of Waste Isolation at Rockwell Hanford Operations, identified five unresolved issues for the Pasco Basin basalts. First, the geology is complex and will have to be understood. (Deju, Tr. 10/11/77, p. 16) Second, the Pasco Basin is near the Columbia River so deep groundwater flows must be considered; indications are that the minimal existing flows do not interact with the Columbia River. (*Id.*, p. 17) Third, tectonic issues must be considered (*Id.*) Fourth, the properties of aquifers and aquicludes in the basalt sequence must be characterized (*Id.* p. 45). Fifth, the possible effect of glaciation in the future must be assessed (*Id.*, p. 17) Many waters in the basalts at large depths date back to the last glaciation. (*Id.*, p. 57)

Crystalline rocks generally tend to be fractured; however, the Hanford basalts are unusual in that at depths below a couple of hundred feet, all the fractures are sealed by secondary minerals. (*Id.*, p. 25) At Hanford the interstices of old fractures tend to be filled with clays resulting in a hydrologically tight formation. (*Id.*, p. 39).

The current schedule is to select a repository site at Hanford in 1978 or 1979. (Tr. 10/11/77, p. 153) Presumably many of the issues above will be resolved by *in situ* experiments at specific sites.

The Waste Isolation Pilot Plant. The proposed WIPP facility, because it is the only site currently designated (tentatively), illustrates well the distinction between idealized geology and actual geologic settings. The mission of the Waste Isolation Pilot Plant (WIPP) site near Carlsbad, New Mexico, is to:

> . . . provide a licenseable site to handle . . . low and intermediate level transuranic waste, and provide a site for experimental activities for high level waste, for both the military and commercial sources . . . [with] all activities carried out initially in the retrievable mode until such time as we have approval to go into full scale operations. (Davis, Tr. 10/27/77, p. 3)

The site is in an area of active potash mining and oil and gas well drilling and production. (Tr., 10/27/77, pp. 24-36, 64-66; Kuhlman, Tr. 3/24/77, p. 83)

The first proposed WIPP site was rejected when unpredicted geology was encountered by the first WIPP drill hole:

> . . . the previous two holes [by ORNL] had not shown any particular anomalies in the area . . . . we found with our first drill hole that the geology was not what we anticipated . . . the salt beds at depth were contorted; . . . this distortion had fractured some of the deep anhydrite rock that is interlayered with the salt and in this fractured anhydrite there were pockets of brine. Well, both the brine and the distortion said that this is such an unpredictable geology . . . We just don't understand enough about it, and to develop adequate understanding, you'd have to drill so many holes that it just doesn't make sense. (Weart, Tr. 10/27/77, pp. 57-59)

The major geologic feature encountered by this hole is a subsurface belt of extreme distortion in deep beds of salt paralleling the front of an underground limestone reef. (*Id.*, p. 59)

> The fluids, [such as encountered in the first rejected site] . . . you find out about those when you drill into them . . . we think we're free from those but we don't understand where that fluid comes from, how it gets there, whether it's connate, or whether it's been introduced in more recent times. (*Id.*, p. 86)

A front of groundwater that is dissolving the salt formation at a rate of four to six miles per million years is moving toward the proposed site from the west. (*Id.*, p. 60) An attempt is being made to estimate the maximum salt dissolution rate in the past few million years. (*Id.*, pp. 60-61). The dissolution front is three to ten kilometers from the boundaries of the study area. (*Id.*, p. 24a) Breccia pipes, which are collapse features resulting from salt being dissolved at depth, could also create difficulties. (*Id.*, p. 78)

> By some of the studies we're doing now, we hope to pin down what the maximum rate [of dissolution] has been in the past when climates were different and rainfall was greater, and so those are under way, but we don't have that information yet. (*Id.*, p. 61)

To identify possible sites for WIPP within the Permian Basin, three bounding criteria were applied; (1) no existing drill hoes [*sic*] could be within one mile; (2) be at least one mile away from the discovered suberosion front; and (3) be at least two miles away from operating potash mines. (*Id.*, pp. 56, 60, 65)

Although activities that could compromise the isolation capability of the repository can be controlled while our social structure remains stable, there can be no guarantee that civilizations will remain stable and retain knowledge of a

repository location even over periods of several hundred years. The resource attractions of the site could induce further generations to re-enter the site to explore and produce the resources of the area.

One of the concepts for preliminary site suitability criteria proposed by NRC is that ". . .the site should not offer an attractive target for future generations seeking natural resources." (NUREG 0326, p. 8). This resource conflict is particularly well illustrated by the proposed WIPP repository site, which is overlain by potash formation and underlain by natural gas.

The natural gas is located at depths of 16,000 feet, while the WIPP facility is to be at depths of 2,100 to 2,800 feet. (Weart, Tr. 10/27/77, p. 68) It is planned that slant drilling for the gas will be permitted beneath the site and that it will not create any difficulties because there is no evidence upon extraction of subsidence or microseismicity. (*Id.*, p. 66)

Weart also expressed the dilemna of exploration of a site versus compromising its integrity:

> One of the problems with oil and gas is you never know whether it's there until you drill for it, and we can't drill to test because that would violate one of our site selection criteria to put a hole through the site. (*Id.*, pp. 83-84)

The WIPP repository is to be located below the McNutt Potash Zone (*Id.*, p. 65b). Although the central area of the WIPP site is "pretty barren" of potash, in the 30 square miles of the proposed reservation, "there will be some conflict with potash." (Id., p. 85) Weart reported that "85 percent of our potash domestic production does come from the Carlsbad area, so it's a very important economic resource in the region." (*Id.*, p. 64) At WIPP, one of the programs planned:

> . . .over the next several years with the potash companies is to look at the effects of their mining, where it is going on, on the overlying layers and particularly on the hydrologic system in those layers. Because these beds do occur well above the repository horizons, it's not immediately obvious that you can't mine it and recover it, but we don't know for sure enough about the impact as the collapse [of the mined areas] occurs. (*Id.*, p. 68)

In addition to the gas and potash resources, there are aquifers to be considered at WIPP as well. The Magenta and Culebra Aquifers, containing "very little water," are in carbonate layers above the proposed repository horizon (*Id.*, p. 69); aquifers occur also below the horizon. (*Id.*, p. 81)

Whether the present WIPP site will be accepted as suitable for high-level waste disposal remains to be seen. DOE has now decided to go ahead and license the facility with NRC to cover the eventuality that it may be necessary to accept high level waste here. (Heath, Tr. 10/25/77, pp. 47-49)

For each of the specific locations under consideration there appears to be significant features which could disqualify the site, depending on the specific selection criteria.

4.3.4.5 *Specification of Acceptance Criteria*

One major difficulty so far in finding a site is the absence of an established and accepted list of the specific characteristics sought. It appears much of the reason for the false starts in the waste program to date has been that the factors for consideration have been established by trial and error. The current program is now organized around an activity to establish effective criteria to reduce the chances of error in the future. But the adequacy of the criteria is also a function of having done sufficient testing to establish that

any set of criteria will result in the successful selection of a site. Acknowledging gaps in information on subsurface phenomena, it is difficult to state conclusively that site suitability or selection criteria are adequate.

Currently several criteria lists are being developed. OWI (McClain, Tr. 10/21/77, pp. 35-40) and Sandia (Weart, Tr. 10/27/77, pp. 74-77) are producing their own sets of characteristics to guide their site evaluations. However, NRC with input from EPA is principally responsible for establishing an acceptable list of specific criteria, both for site suitability and repository performance. (Channel Tr., 3/24/77, pp. 161-166; Cunningham Tr., 3/24/77, pp. 122-133; Gilinsky Tr., 1/31/77, pp. 6-24; President's Energy Message, Fact Sheet, Feb. 26, 1976, pp. 3-4)

The NRC site suitability criteria are scheduled to be issued in draft form supported by a draft EIS in Spring of 1978 and adopted three to six months later. (NUREG 0326, p. 18) The EPA standard on which the NRC criteria should in part be based is due to be in about the same timeframe. (JPL/OSTP, at B-27, B-30) Cunningham of NRC was skeptical of the ability to meet this schedule.* (Tr. 3/24/77, p. 147)

The NRC has now issued a preliminary set of criteria (NUREG-0326) to gauge in early stages whether a proposed geologic repository is suitable. This preliminary draft has been circulated for review, and comments are collected in NUREG-0353. Analysis of workshop comments is instructive because it is indicative of the concerns that NRC must address in rulemaking. Some participants "felt that the criteria as presented were too general to be discussed in de-

---

*At least part of DOE's rationale for seeking a license for the WIPP facility is to keep NRC and others focused on establishing a complete regulatory system (Heath, Tr. 10/25/77, pp. 47-49).

tail." (NUREG-0353, Pt. 1, p. 23) Two example criteria are:

- The actual or potential resource value of the repository site should be such that it will not unduly deprive this or future generations of necessary and valuable resources. (NUREG-0326, p. 9)
- The geological medium should be such that chemical, radiological, and thermal effects of the waste on the repository will not compromise the long-term effectiveness of the repository. (*Id.*, p. 8)

These preliminary criteria are so vague that probably there would be little disagreement. However, because they are so vague, almost any interpretation can be applied. For example, the first criterion might exclude salt formations. (NUREG-0353, Pt. 1, p. 15)

For preliminary criteria that are somewhat quantitative, there was disagreement among reviewers. One of the proposed geophysical criteria is:

> The repository site should be shown to be geologically stable, i.e., it shall not have experienced geological events during the past 10 year period of a type and magnitude such that the long-term effectiveness of the repository could be compromised were similar events to occur at some future time. (NUREG-0326, p. 8)

Two review panels expressed concern over the choice of a time limit regarding past geological events because the figure was not adequately defended and it might exclude too many sites. (NUREG-0353, Pt. 1, pp. 19-20)

In their preliminary criteria document, the NRC staff refer to an "optimum state" and "optimum geologic conditions and optimum hydrologic conditions." (NUREG-0353, Pt. 1, p. 3) However, they were not abe [*sic*] to define "optimum." (*Id.*, pp. 52-53) In addition, the NRC staff has stated that for tectonic stability, hydrologic stability, me-

chanical stability and freedom from mobile groundwater, "meaningful definitions cannot be given at this time." (NRC Responses, pp. 7-57, 7-58)

This situation would seem to clearly indicate that it will be some time before specific, agreed-upon criteria will be established.

The American Physical Study Group "concluded" that "the geologic and hydrogeologic conditions that can provide for satisfactory isolation of radioactive waste exist in a sufficient number of places that we anticipate no difficulty in locating several suitable sites in different geologic media within the immediate future." (APS, p. VII-3) However, they never identify the bases for their conclusions, and they do not specify what geologic and hydrogeologic conditions can provide isolation. Therefore their statement is one of judgement. Because no site has been selected and demonstrated to be satisfactory according to explicit criteria and because no criteria for site selection even exist, there can be no guarantee that even one suitable site will be found. As we have noted, the three potential locations that have been identified have problems that could possibly disqualify them. At present, there are only eight states containing substantial salt formations where restrictions due to legal constraints or public resistance do not create barriers for consideration of potential sites.

The first or the first few repository applications will test the adequacy of the criteria established. If the criteria miss important features which later result in the disqualification of a site on closer examination, it will be clear the criteria need improvement. It may require the completion of the entire licensing process to establish that a suitable site can be found.

NRC licensing of a repository will likely consist of four major steps: preliminary site review, repository construction approval, limited repository operating license, and a full repository operating license. (Cunningham, Tr. 3/24/77, p. 129-130) The elements of preliminary site review are site suitability criteria and pre-application site description requirements. (*Id.*, p. 130) Site suitability criteria, the first of a series of criteria, provide the basis for judging whether a proposed disposal site "is suitable, i.e., is capable of containing waste for periodsadequate to protect the public health and safety and the environment" (including socio-economic impacts). (NUREG-0326, p. 1)

After NRC adopts criteria, which are qualitative requirements, they must adopt standards, which are quantitative requirements. However, the standards must be based on a level of physical and chemical understanding of nature that is not yet available. Therefore we are not optimistic that the NRC will establish meaningful standards for repository site suitability in the near future that can be used to confirm the ability to locate an acceptable site.

The failure so far to find the right geologic circumstances and to establish a meaningful and successful set of performance or suitability criteria is by no means proof that these will *never* be available. But it is accurate to state that currently we are not certain about whether or not an acceptable site will be found.

4.3.4.5 *Assuring Isolation Safety Assessment*

The expert group of the OECD Nuclear Energy Agency as quoted before noted: ". . . a demonstration [of waste isolation] . . . consists of showing that even the most extreme environmental changes would not lead to hazardous consequences." (OECD, p. 67) The question is how one makes this "showing." The objective is to have a suffi-

ciently thorough understanding of the physical and chemical processes involved and the behavior of the system so that accurate predictions can be made of the consequences of a failure event. To be absolutely confident or accurate is likely an impossible goal. There is a threshold of confidence, vaguely defined. The "thorough understanding" could come from exhaustive testing. For testing alone to be sufficient would probably require resources in excess of what could be considered practical. The common "crutch" in such cases is a mathematical simulation of the physical situation that can be used to perform "experiments" on a computer.

There is a second reason why such models may be necessary. Because of the unusually long time frames over which a repository must function, any observations of test situations could take place over only a small fraction of the isolation period of interest. Therefore, the processes which might occur over the lifetime of the repository must of necessity be predicted from the existing data base generated in the experimental period. Because of the complex interrelationships which must be dealt with, computer models are almost essential to the prediction task.

The use of models in this way is not unique to the case of waste repositories. Reactor design and safety analysis, bridge design, or practically any large structural design and analysis relies on a combination of empirical data and a formalization of the accumulated understanding of the system through mathematical simulation. The difference for waste repositories appears to be that there is not the voluminous data base of experiment and experience to back up existing models as there is, for example, for reactors. This data base and explicit validation of the models through experimentation are essential to establish the confidence to use them as predictive tools.

If we are to rely on a simulation model instead of actual experimentation, the basic question is whether the model is accurately reflecting the behavior of the actual system. The general way to check the accuracy of the model is to carry out specific experiments to see how closely predicted results match observed results, and, if the fit is poor, to revise the model. There is no way to confirm the validity of a model for which this "checking" has not been done.

A mathematical simulation model could be expected to be relatively accurate if it fulfilled at least three basic conditions:

1. It would have to include all of the important parameters having an effect on the system being studied.
2. It would have to describe accurately the processes involved and be consistent with short-term observations of actual phenomena (experimental or natural).
3. It would have to be built on a sufficiently large data base (or be gathered over a long enough period) to ensure that the observations are representative of what actually is occurring. If certain aspects are extremely site specific, however, the data base may consist of observations in only one area over a particular period of time.

The need for validation can be illustrated by example. Cohen has made calculations on releases of nuclides from a repository at a depth of 600 meters by assuming an atom of waste would have the same probability of reaching to man as an atom of radium from that depth. Since radium is a naturally occurring radionuclide, we have some direct data on mass transport rates.

Cohen calculates a very low dose-to-man from waste disposal using this assumption. However, the hypothesis

itself dismisses in its assumptions much that is critical about the waste disposal problem. Radium is not emplaced in a formation by deliberately creating an artifical [*sic*] opening and compromising the integrity of the formation. The integrity of uranium deposits from which radium comes is the result of natural process which have come to equilibrium over long period of geologic time. Radium is in chemical and thermal equilibrium with its ore. By contrast, emplaced waste would not be in equilibrium with the host rock of a depository, and these physical and chemical disequilibria may be responsible for the imporant failure processes. (Tr. 10/27/77, p. 159) Further, radionuclides vary greatly in their chemical behavior and cannot all be assumed to behave identically with radium. In short, without elaborate verification that waste indeed behaves like radium, Cohen's calculations, while interesting, have little relevance to the question of isolation safety.

Several substantial modeling efforts are currently underway, attempting to incorporate the best available information. The WISAP program includes six tasks (Burkholder, Tr. 10/12/77, pp. 30-31):

1. Safety Assessment Concepts and Methods — this task will inventory and evaluate previous assessment concepts.
2. Disruptive Event Analysis — events which can cause radionuclides to cross the boundary of the repository cavity will be analyzed.
3. Source Characterization — leach rate data for various waste forms will be determined.
4. Transport Modeling — an integrated modeling system for describing radioactivity release and transport processes from repositories will be developed and demonstrated.

5. Collection and Generation of Transport Data — data describing radionuclide-geologic media interactions will be developed.
6. Societal Acceptance — identify issues and develop methods of communicating assessment results.

WISAP project leaders intend to have the method development completed by the end of FY 78; they will then take six months to perform a demonstration of the use of the method for a specific site (Burkholder, Tr. 10/12/77, p. 31), although improving the method will be an ongoing activity. (Burkholder, Tr. 10/13/77, p. 37)

Lawrence Livermore Laboratory is developing a model for the NRC to use in assessing the performance of a proposed site. To date, two models have been formulated which will provide results for a third model. Comparison of various properties of the two models is continuing. Current work is concentrated on calculation methods for incorporation into regulatory guides, so that actual calculations may be done when a site has been selected.

Sandia is developing a very elaborate safety assessment model for NRC. The program is geared toward developing analytical models to describe: (1) the long-term behavior of a deep geologic radioactive waste repository, (2) the movement of radionuclides in lithosphere, and (3) the influence of demography/land-use and climate on the radiation exposure of humans to possible releases of radioactive materials. (McGrath, Tr. 10/27/77, pp. 140-140a)

The program, which was begun on March 1, 1976, will continue through at least FY 1978 and at present consists of model refinement as well as a sensitivity analysis.

Claiborne and Gera (1974) have also made a simplified consequence evaluation of failures in bedded salt repository.

The characteristic of each of these models is that they have yet to be adequately tested against experimental data. The previous discussion noted significant gaps in knowledge that exist with regard to hydrology, flow in fractured media, sorption phenomena, and waste-rock interactions. Because of these gaps, *a priori* modeling of important phenomena will be very difficult.

ERDA 76-43 (TAD) notes this problem:

> The major current technical gap is lack of *a priori* evaluations of the post-emplacement stability and the containment characteristics of the geology and its contained waste. (Vol. 4, p. 25.1).

NUREG-0116 notes that:

> Past work does not, however, fully cover the risk situations that should be explored. Representative studies have been done with varying degrees of depth and sophistication, but there are still uncertanties in areas such as the effect of waste presence on repository stability; the probabilities and consequences of intrusive acts by humans; the validity of data used in modeling studies; the design and regulatory actions needed to minimize possibilities of repository failure; projection of future societal habits and demography, and, finally, the relative importance of various potential initiating events. (p. 4-94)

Goranson at Hanford indicated that, as a result of previous nuclear operations, there is much experience in terms of the content and migration of radionuclides in soil, air, and water which allow modelers to construct models and check them against real systems. (Tr. 10/13/77, p. 49) Burkholder went on to indicate that this kind of information has been used in constructing the models in the first place. (Tr. 10/13/77, p. 49)

Generalized observations which have been used to construct the model, however, cannot also be used to validate it. For this purpose, independent testing of the model for a specific site is needed:

> We then want to exercise the model for a specific site, and we feel that this is necessary in order to determine if there are any holes in the modeling effort, areas that need further work . . . (Burkholder, Tr. 10/12/77, p. 52)

Because of the long time frames that are being modeled, the complete chain of models cannot be validated experimentally, but parts of the models can and should be confirmed and validated. In addition, this validation should be more than a fitting of experimental data to calculated data. As a specific example, consider that a hydrologic experiment is done in which a tracer substance is injected into a central well bore and its movement is monitored in surrounded observation wells. If the number of adjustable parameters in the model is large enough with respect to the number of experimental observations, the observations can be matched to the calculations even if the model is deficient. Therefore, not only must there be experimental verification of the models, but also peer review to judge if the verification is valid.

The concern over confidence in untested models is that the assumptions may be wrong, important physical processes may be overlooked, or there may be any number of surprises.

> The reason we're doing that [exercising the assessment method for data at a specific site] is really to point out weaknesses in what we're doing. We'd of course like to not have any, but I would be surprised if everything came out the way we thought it ought to, and we thought everything had the same level of sophistication

and we were happy with it." (Burkholder, Tr. 10/13/77, p. 45)

For example, a great deal of effort has gone into modeling flow through media with very low primary permeability. However, flow in fractures and cracks ("secondary permeability") could be the controlling factor permitting release. Seepage from a repository will take the path of least resistance—along joints, fractures, interfaces between strata, and along poorly sealed shafts and boreholes. The unexpected results that this type of flow might produce need to be sought and evaluated. According to de Marsily (SCIENCE, August 5, 1977, p. 525), the rapid migration of plutonium at Maxey Flats was "previously unheard of." Subsurface reactions and geochemical interactions are very complex. Validation of any model is clearly needed to gain confidence in our understanding.

Since the models have yet to be validated and other necessary experimental and *in situ* data are yet to be calculated, the "showing" of containment under extremes of environmental disruption has not been accomplished. This does not mean it cannot be, however. Such a "showing" appears to be within scientific capability. However, the task has just begun.

4.3.6 *General Views on Demonstration and Existence of Waste Disposal Technology*

So far we have examined in detail the technical requirements for having a "demonstrated" waste disposal technology. It is useful, though, to examine general statements on the status of the technology to check the evaluations made so far. Such statements have been made by several cognizant federal officials and technologists.

Robert Thorne, at the time the Acting Assistant Administrator for Nuclear Energy, ERDA, has stated:

> As you are aware, we have previously committed to the initial operation of two repositories by 1985 and we still believe that *this objective must be met to demonstrate a permanent solution to waste management* in order to retain public acceptance of nuclear power generation. (May 4, 1977, letter to Clifford Smith, NRC, emphasis added)

Kenneth Chapman, Director, Office of Nuclear Material Safety and Safeguards, NRC testified:

> The industry and other federal agencies are attempting to *complete their programs for the demonstration of waste management technologies* for high-level waste within the next decade. (Testimony before the Subcommittee on Energy and the Environment of the House Committee on Interior and Insular Affairs, Tr., February 18, 1977, p. 235, emphasis added.)

Dr. Charles Hebel, Chairman of the American Physical Society:

> There has been a demonstration of individual pieces, some of them at full scale. But putting the whole system together, or in the case of spent fuel or high-level waste, an encapsulated system complete with installation in some type of repository does not exist. *The demonstration that one could do this reliably day in and day out has not been achieved.* (Testimony before the Subcommittee on Energy and the Environment of the House Committee on Interior and Insular Affairs, Tr. May 16, 1977, p. 15)

William Bishop, Chief, Waste Management Staff, NRC Office of Nuclear Material Safety and Safeguards (ONMSS) and Donald Frazier, Office of Policy Evaluation, NRC have written;

> A recent USNRC Task Force Report (NUREG-0116) supports the impression, widely-held by nuclear specialists, that proposed technology appears adequate to

dispose of the wastes safely, but that *the technology has neither been satisfactorily demonstrated nor fully analyzed for safety*. (Goals, Objectives and Criteria for the management of Nuclear Waste: Rethinking the Problem, paper submitted to CERCDC Hearings, Tr. 3/24/77, p. 267, emphasis added.)

The ERDA Fuel Cycle Task Force in 1975 concluded:

[P]ermanent disposal of the radioactive waste *has not been demonstrated*. (p. ix)

* * *

ERDA should proceed promptly to select and *demonstrate an ultimate waste disposal method*. (p. xiv)

* * *

Major aspects of safe disposal of radioactive waste *have not* been *demonstrated*, and certain treatment procedures *have not even been developed*. (p. 30)

* * *

Disposal of waste in a way that will eliminate the need for continued human action to assure that man and the environment are protected for the life of the radioactive material *has not been demonstrated*. Experimental work has shown that disposal in geologic formations is feasible, but *in situ* demonstration is required before this method of management can be used. (p. 45) (*Nuclear Fuel Cycle*, A Report by the Fuel Cycle Task Force, U.S. ERDA, ERDA-33, March 1975; emphasis added.)

In a Report by the House of Representatives, Committee on Government Operations the following statement appears:

We have no demonstrated final answers on what steps the nation will take to safely guard and store this deadly waste over the many centuries ahead. (West Valley and The Nuclear Waste Dilemma, 12th Report by the Committee on Government Operations, October 26, 1977, p. 2, emphasis added.)

The House Conference Report on the Clean Air Act Amendments notes:

> Somewhat ominously, however, *there is not one of the major categories of radioactive wastes for which adequate disposal plans have been formulated and properly carried out*. All have major areas of uncertainty or inadequacy, or both.
>
> Not only is the *demonstrated technology* for managing these major categories of radioactive wastes (spent fuel, decommissioning wastes, gaseous wastes, purified plutonium) *either undeveloped* or *inadequate*, but a recent government-sponsored study has called the existing government organization intended to manage the wastes 'unworkable' and has labeled the existing framework for government regulation of waste disposal programs 'ineffective'. (House of Representatives Conference Report No. 95-274 on the Clean Air Act Amendments of 1977, pp. 37-38, emphasis added.)

Other statements are seemingly much more positive. The Study Group of the American Physical Society has said:

> For all LWR fuel cycle options, safe and reliable management of nuclear wste and control of radioactive effluents *can be accomplished with technologies that either exist or involve straight-forward extension of existing capabilities*. (Report to the American Physical Society by the Study Group on Nuclear Fuel Cycles and Waste Management, July 1977, p. 3, emphasis added.)

We believe this statement is consistent with the statements quoted above when one views the statement in the context of the remainder of the report. Other statements in their report seem to indicate that the "existing technologies" for

waste management are those for mining, handling, and emplacement of wastes,* not isolation.

The Study Group, in indicating that safe and reliable waste management "can" be accomplished with an extension of existing capabilities, has not said anything about a *current demonstrated* capability to actually provide isolation over the required time frame. Their statement that disposal can be accomplished is based on their "confidence"** or "expectations"*** We agree that there is no information now which shows waste disposal cannot be done or that there is no reason not to proceed to check out current concepts.

Similarly, the report of the Nuclear Energy Policy Study Group stated:

> We believe that nuclear wastes can be disposed of permanently in geological formations in such a way that there is very little prospect of material escaping into the environment. (Ford, MITRE, p. 245)****

This statement, too, is supportive of the geologic disposal concept but clearly does not contend the concept has been

---

*The Study Group p. VII-28 talks of " . . . a demonstrated technology for both emplacement and retrieval of radioactive wastes" for mined large diameter drilling is a technical problem. On p. VII-4, the Group notes no technical barrier to *emplacement* of commercial HLW in mined salt caverns.

**On p. vii-r, the study group express "confidence in the ability to isolate HLW, TRU waste, and spent fuel from the biosphere for periods greater than 30 years."

***Also on p. vii-4 the Study Group states that they "expect that a repository site in bedded salt with suitable hydrogeology can be found."

****Disposal of waste in stable geological formations which are isolated from appreciable contact with ground water appears to provide adequate assurance against the escape of consequential amounts of radioactivity even over long periods of time. While it is evidently impossible to demonstrate the security of such repositories on the relevant time scales experimentally, present geological evidence and analytical techniques can provide the necessary confidence in the system. (*Id.*, p. 266)

demonstrated. Uncertainty is expressed as to providing assurance against escape of radioactivity. Experimental evidence "can" provide confidence, but clearly they do not state this confidence exists now.

U.S. ERDA stated, in *Alternatives for Managing Wastes from Reactors and Post Fission Operations in the LWR Fuel Cycle (ERDA-76-43) that:*

> The information contained in this document shows that all technologies needed to manage radioactive wastes from the backend of the commercial LWR fuel cycle are commercialized, available, or under development; *there are no gaps*. (Emphasis added)

However, the ERDA statement indicating no gaps is *contradicted* in another portion of the same document:

> *The major current technical gap* is lack of *a priori* evaluations of the post emplacement stability and the containment characteristics of the geology and its contained waste. (Emphasis added, p. 25.1)

As has been noted many times before the inability to *a priori* confirm isolation is a serious technical gap for a waste disposal concept.

The NRC, in its denial of a petition for rulemaking, stated:

> The accumulating evidence as discussed below continues to support the Commission's implicit finding of reasonable assurance that methods of safe permanent disposal of high-level wastes can be available when they are needed.
>
> * * *
>
> The technology for disposal is reasonably available, and the studies done to date, while not conclusive, are nevertheless promising for timely and safe implementation of the technology.
>
> * * *
>
> [T]hese [GESMO] proceedings to date have furnished the Commission with information on waste manage-

ment sufficient to convince the Commission that the technology for disposal does exist. (42 Fed. Reg. 34393, July 5, 1977)

Although the NRC is convinced that the technology for disposal *does* exist, they state earlier that disposal methods *can* be available *when* they are needed. They also state in another section that safe storage methods are available "*until a permanent disposal system can be demonstrated.*" (Emphasis added, 42 Fed. Reg. 34393, 1977). Thus these statements indicate that methods are not currently available and have not been demonstrated.

In sum, we have been unable to find any responsible official or technical group who states that waste disposal technology has been developed and demonstrated. Instead, there is at most a feeling that it can be demonstrated in the future.

4.4 *Conclusions*

The demonstration of a geologic waste disposal technology was stated to consist of three components:

1. The ability to mine the formation.
2. The ability to handle and emplace wastes.
3. The long-term isolation of wastes.

Of these three, demonstration of long-term isolation, which is the principal function of waste disposal, is the most difficult to achieve and was indicated to involve four parts. The evidence can be summarized under each of the four.

1. Experimental confirmation of the existence and sufficiency of postulated desirable characteristics needed to confine wastes.

   Seven key characteristics were enumerated concerning hydrology, stability, leachability, waste-rock interactions, rock mechanics, sorption, and repository sealing. Each of these contribute to the barrier

that a geologic formation is intended to provide. However, significant gaps and uncertainties in each area were noted. *In situ*, large-scale, and laboratory data from controlled experiments is essential to obtaining the requisite information.

2. An ability to locate a site in nature which possesses the right conditions to confine waste.

   In the past, five attempts to find suitable situations to confine wastes have been aborted due in part to unanticipated technical problems. Current sites under consideration all contain features which could disqualify them from use as repositories. No site has been generally accepted as suitable.

3. Establishment of a set of criteria or standards that define the characteristics of geologic settings needed to maintain waste isolation.

   Only preliminary sets of criteria are available and some of the individual criteria are so vague as not to be useful or so strict that no site may qualify. Establishing criteria depends on obtaining a detailed understanding of the geophysical and geochemical processes so that the adequacy of the criteria can be confirmed. Criteria and standards from NRC and EPA will first be developed in mid to late 1978 and then refined, applied and checked in the next several years.

4. An understanding of physical reality validated by scientific evidence sufficient to show with a high degree of confidence that isolation is maintained even under extreme adverse situations.

   Numerical simulations are likely required for this showing. Such simulations are under development and have not been validated by comparing their pre-

dictions to observed results and reviewing their internal workings.

We conclude after this extensive review that substantial scientific evidence is lacking even to confirm the feasibility of waste isolation in geologic formations, the most advanced disposal option. Therefore, it is clear that a permanent and terminal waste disposal technology has not been developed and demonstrated. This conclusion on the lack of demonstration is consistent with the statements of several cognizant officials and groups. We agree that the mined cavity geologic disposal concept has merit, along with other options, on the basis of certain inferred or postulated features. We do not believe there is sufficient evidence at this time either to say that the geologic disposal option will fail or it will succeed. Evidence to confirm or reject the feasibility of the concept is still required, just as it has been since the NAS made its initial recommendations in 1957.

4.5 *Recommendations for Federal Programs*

The present upgraded federal waste disposal program was initiated through two policy statements by President Ford in 1976. Through his February 26 statement, the President increased the budget for the commercial waste program over five-fold. (President's Energy Message, Fact Sheet, February 26, 1976, p. 7) The October 28 statement established the goal of demonstrating and licensing a complete repository for commercial high-level wastes by 1985. (Statement by the President on Nuclear Policy, Summary Fact Sheet, October 28, 1976, p. 5)

Pursuant to the February statement the "National Waste Terminal Storage (NWTS) Program" was initiated. The major effort of the NWTS Program is a stepwise reconnaissance of potential formations, developing repository designs, constructing repositories, and having a completed

repository licensed by the NRC in 1985. Depending on NRC licensing requirements, initial operation may be in a retrievable mode and is planned to be at less than full scale. (Y/OWI-8, pp. 2-10)

The increased funding and broad evaluation of NWTS is clearly a step in the right direction. However, we are concerned that the program as designed de-emphasizes scientific and technical work and experiments at repository depth and may have unnecessarily (and perhaps unwisely) closely linked experimental and operating facilities.

The current NWTS program emphasizes drilling to characterize geologic features, test thermal effects, and evaluate handling and storage options. Little mention is made of subsequently performing vault tests to provide the needed data on sorption, waste-rock interactions, and to gain a level of knowledge of subsurface physical and chemical interactions necessary to evaluate the ability of a geologic unit actually to isolate waste. The emphasis of the current program seems to be on repository engineering problems with much less emphasis on coordinating research addressing the scientific problems of confirming the isolation concept. This emphasis is reflected in the OWI description (Y/OWI-8, pp. 7-10) of the purpose of each of its six steps toward developing a full-scale repository:

1. *Identification of formations of interest*

   In the process of identifying formations of interest, a review is made first which is based solely on the general knowledge of the geologic properties and/or fundamental properties of the rock type involved. If the review is promising, a reconnaissance survey will be undertaken. This step has already led to the identification

of salt, argillaceous, crystalline rock, and carbonate rock formations as formations of interest. However, others may also be identified in the future.

2. *Reconnaissance survey*

The purpose of the reconnaissance survey is to collect all the available data on those properties and characteristics of a formation which must be considered in making a regional evaluation of the potential for using the formation for waste disposal. These properties and characteristics might include (1) structure, stratigraphy, depth, and thickness; (2) hydrology; (3) mineralogy/petrology; (4) natural resources; and (5) general surface characteristics. Based on the information compiled at this stage, the prospects for the formation will be evaluated and reviewed, and a number of smaller regions will be identified for further geologic area studies.

3. *Area studies*

The geologic area studies that follow the reconnaissance survey are designed to develop new and specific data in the areas of interest. These studies include (1) core drilling at a density of perhaps 6 to 10 holes per 1,000 sq miles to obtain adequate definition of the important subsurface characteristics of the formation, (2) field geologic mapping, (3) hydrologic studies, (4) geophysical surveys, and (5) other geologic studies. It is appropriate to note that environmental assessments are usually required by each state in order to obtain drilling permits. In the NWTS program, an environmental assessment for each drilling operation will, of course, be prepared in compliance with ERDA regulations, which conform to the National Environmental Policy Act of 1969. Upon completion of these studies, the suitability of the area will again be reviewed, and if it still appears

promising, a few specific locations will be identified for even more detailed confirmation investigations. At this point, extensive reviews will be made which will involve all review groups that have been established. The selection by OWI and ERDA of specific locations for more detailed confirmation investigations and the final selection of repository sites will be firmly based on all these reviews, as well as on public comments obtained during public progress reports.

4. *Detailed confirmation studies*

The detailed confirmation studies are directed toward specific locations of perhaps 5 to 10 sq miles each. The investigations involve primarily the drilling and testing of four or more core holes at each location, plus the continuation of any specific geologic studies for which the previous results were inadequate to evaluate the suitability of the location. The results of this phase of the investigation will be used to determine which locations fully qualify for consideration as repository sites.

5. *In situ tests*

Once a formation has been identified as a possible candidate for waste disposal, a set of *in situ* experiments will be conducted in parallel with other geologic studies. These in situ experiments range from simple electrical heaters placed in holes in exposed surface outcrops of the formation to extensively instrumented vault tests in excavations specially constructed at the expected depth of the repository. In general, the vault tests are constructed to permit tests with both electric heaters and/or canisters of simulated waste which are removed at the conclusion of the experiment. They provide extensive information on the physical behavior of the rock and the waste container, as well as the stability of the under-

ground layout. Preliminary in situ tests have already been completed for one bedded salt formation but still have to be completed for other formations of interest.

6. *Respository operations*

After adequate review, a repository site will be selected, and a repository will be constructed which will meet NRC licensing requirements. The facilities may be licensed under 10 CFR 70, Special Nuclear Materials. Possible constraints during initial-phase operation might include a requirement for retrievability of waste, a limitation on the size of the facility and/or on the amount of waste that can be stored, and a requirement for special testing or monitoring to confirm the adequacy of the design. Because of the limitation of size, the excavation for the underground repository would be only a portion of that for the full-scale facility. When sufficient data have been gathered to justify removal of the constraints contained in the NRC license, the facility will be expanded to full-scale, retrievability will be abandoned, and the fully utilized rooms will be backfilled and sealed.

Elsewhere (McClain and Zerby, Tr. 3/21/77, p. 712) the activities in the initial phases of operation of the repository were discussed as follows:

> *Establishment of a Pilot Plant*. After adequate review, a pilot plant site will be selected and a pilot plant will be constructed to evaluate the handling and storage operations using actual canisters of high-level waste and to confirm all design calculations. This will be done with surface handling equipment and underground excavations that are portions of the full scale facilities. *Experiments will be performed to test retrievability devices and emplacement concepts, and to evaluate the stability of the underground workings*. (Emphasis added)

Expanded Pilot-Plant Operations. The data obtained during pilot-plant operation will be used to design the expanded pilot plant, which will be operated until it has successfully demonstrated that (1) it can safely receive, emplace, and store high-level waste at the design rate; (2) all criteria for a Federal repository have been met; and (3) no anomalies in the geologic formation have been found.

Conversion to a Federal Repository. At some point in the pilot-plant development program, when all license requirements imposed by the U.S. Nuclear Regulatory Commission are met, the facility will be converted to a Federal Repository. At that time, the retrievability option will be dropped.

This description makes no explicit mention of the following types of testing which others have indicated are essential in confirming the feasibility of the geologic isolation concept:

1. Determination of "hold-up" or retention factors for radionuclides through geologic units *in situ*.
2. The efficacy of repository sealing.
3. Validation of numerical simulations of repository response through controlled experiments *in situ*.
4. Effects of fracturing overlying impermeable strata through thermal uplift, allowing water to enter.

In contrast to the description of experiments for NWTS, Sandia is planning to incorporate in the experimental level below the TRU waste repository in the Waste Isolation Pilot Plant specific tests to answer fundamental questions on nuclide migration, chemical effects, and borehole plugging. (Tr. 10/27/77, pp. 115, 115a, 122)

We believe that the NWTS program as currently structured involves the following problems:

1. *In situ* tests are scheduled to occur after formation selection but prior to repository operation. The most sophisticated experiments are vault tests in which both heaters and simulated waste canisters are emplaced. Although these experiments provide rock mechanical property data useful during the operational phase, they are not of sufficient duration to provide more fundamental data relevant to the isolation function of the repository. It may be that these experiments, as planned are to be more extensive than those of Project Salt Vault, but program descriptions indicate that they are not. Types of experiments that we believe should be done are given later.
2. Large-scale experimentation is not scheduled to begin until 1985. The only explicitly experimental facility apparently is WIPP. The experiments in other locations are seemingly more limited. Licensing of a commercial repository is scheduled to be simultaneous with beginning the WIPP experiments (see Chart next page). This approach requires licensing to proceed in the absence of verifying information. We believe this scheduling will put great pressure on simply getting a repository in operation and labeling any result from experimentation "acceptable." Weart has estimated that certain WIPP experiments will require 7-10 years to collect significant data. (Tr. 10/27/77, p. 128) In reality WIPP will likely be setting the pace for operation of commercial waste repositories, since the WIPP data may be needed to license others.
3. Coupling an experimental facility to eventual commercial operation has serious drawbacks. First, there would be good reason *not* to do extensive, elaborate

experiments because those might ruin the integrity of the site. Examples of experiments incompatible with ongoing operation of a facility area: (1) drilling and instrumenting hundreds of monitoring and test holes, (2) deliberately introducing water, and (3) purposely overheating the formation to check effects on other strata. All of these experiments would be a part of a good validation program, but those charged with making the site operational would be understandably reluctant to allow them. Second, while there is general recognition that an experimental site is needed, if it is also to be (even potentially) an actual disposal site a logical dilemma for a regulator is posed: If experiments are needed, then the safety of commercial operations has not been assured. But if there is a chance the site will be used for actual disposal, there must be little doubt it will work. This dilemma could be solved if from the beginning the experimentation and the disposal operation were in *separate* facilities for which a license to permanently emplace waste is not sought. This is not to say there should be no exploration of the actual repository site, however. Confirmation of the suitability of a site clearly requires some exploratory or even experimental activity. A separate facility would provide an opportunity for extensive tests of the *generic* concept of geologic isolation.

4. Developing a waste disposal technology is not simply a matter of engineering. Basic scientific evaluations of the requirements for maintaining isolation in a geologic setting, are needed to guide the engineering. Proceeding in the absence of this evidence appears to be very risky. If close examination reveals basic deficiencies with the concept after repositories have

been opened, it will be very costly and time consuming to decommission the facilities and to develop alternatives to the level of applicability. Since ultimately all R&D expenses are to be recovered through disposal charges,* having to start anew on different alternatives after taking the original concept to an advanced stage without checking it out thoroughly first could substantially increase ultimate waste disposal charges, now thought to be trivial on a per-kilowatt-hour basis.

5. Finding and confirming a repository is not a one time process. With continued expansion of nuclear power, the process of providing isolation repositories must be routinized. Depending on the growth scenario, around the turn of the century we will have to be opening new repositories every 3-5 years (see Figures next page). Assuming that growth levels off at 507 GW of nuclear power installed, we will need to have 15 repositories operating as of the year 2033.** Therefore, the confirmation of the concept includes not only verification that we can find one or two sites with the right conditions, but that we can find numerous sites and find them with ease.
6. A thorough scientific evaluation of the geologic disposal concept probably will be the focus of much

---

*Dr. Roberts and Dr. Kuhlman of ERDA stated in a press conference on the ERDA waste disposal program that the fee charged to utilities will include not only the cost of the specific facility but the total R&D cost, too. The charge was estimated at the time to be 0.1-0.3 mills/kwh. (Transcript, ERDA Press Conference on Waste Disposal Program, December 2, 1976, pp. 14-15)

**It is often stated that all the accumulated commercial waste in the year 2000 will fit into the repository. While this is true, it is true only because the bulk of the waste has not cooled sufficiently for emplacement. The second repository is needed around 2005, the third by about 2010, etc. See Figures next page.

attention during NRC's licensing review. The NRC is required by the Atomic Energy Act [42 U.S.C. 2011, *et seq.*, (1972)] and the Energy Reorganization Act [42 U.S.C. 5801(a) (1975)] to ensure that the public health and safety are protected. If the NRC follows its pattern for other licensing decisions, a very thorough safety analysis report (SAR) will be required. A study of the contents of a hypothetical SAR was made by OWI and assuring long-term isolation figured prominently in the list of discussions which would be required. (Y/OWI/SUB-77/22320, Section 8) If the information is not available, there may be sufficient concern on the part of the public, the NRC staff, and others such that the licensing process could be delayed or even terminated.

HIGH-LEVEL WASTE DISPOSAL
CURRENT MAJOR FEDERAL AGENCY ACTIVITY TIMETABLE

NUMBER OF REPOSITORIES NEEDED TO CONTAIN HIGH-LEVEL WASTE FROM NUCLEAR REACTORS

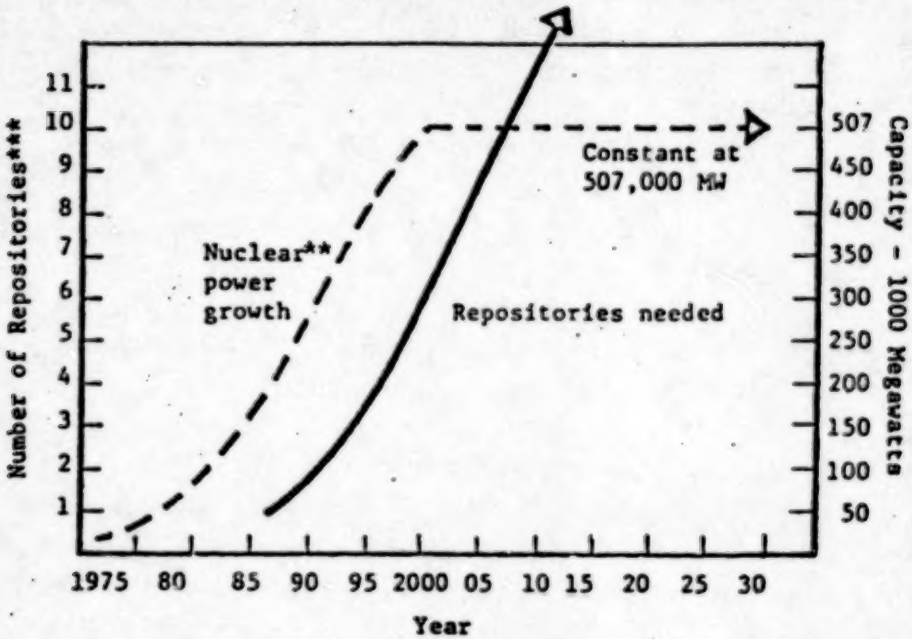

The difficulties experienced to date in the search for an actual repository site should be viewed in the context of the number of repository sites that *will have to be found*. In the modest case of a nuclear commitment held constant at 507,000 MW capacity (the U.S. Nuclear Regulatory Commission's late 1976 *low, no breeder* forecast), a new repository would have to be opened every 2-3 years.

**From GESMO (NUREG-0002), Vol. 2, p. 111-30 (NRC's *low, without breeder* forecast)

***Based on repository capacity of 35,000 MT waste, and each 1000 MW reactor discharging 30 MTU per year

On the basis of our review of the NWTS program, we recommend modifications in and additions to the experimental effort. Some of the experiments we propose may in fact be planned for the future. If so, we suggest that they be included explicitly in the program plan along with dates for experiment initiation and termination. In the absence of information, we must assume that the program elements do not exist.

Our specific recommendations on the NWTS program are as follows:

1. Most important are large scale vault tests conducted in cavities at typical repository depths for each of the major rock types being considered for an ultimate repository. The following experiments are proposed, perhaps in separate cavities or in adjacent cavities:
   a. Formation thermal effects analysis under extreme conditions (e.g., for salt, perhaps 600 kW/acre instead of a design basis 60-150 kW/acre). Analysis should be made of rock stability, thermally-induced fracturing, and changes in rock chemical properties, especially relating to reactivity with radionuclides in solution.
   b. Radionuclide transport through the formation studied by the injection of aqueous mixtures of tracers mimicking elements typically found in waste.
   c. Study of the utility of adding adsorbing barriers (i.e., clay, cements) to reduce radionuclide transport.
   d. Determination of *in situ* hold-up factors for the significant radionuclides.
   e. Determination of the ability to backfill and adequately seal the repository over waste with a nor-

mal thermal output and also with, say ten times the planned thermal output.

f. At least two vault experiments should be done in formations of each rock type in order to gain confidence that generic as well as site-specific effects are understood.

The cavities should be drilled and instrumented to obtain a clear understanding of both near-field and far-field effects.

2. Cavities in suitable formations that have been abandoned should be investigated and deliberately used as test beds, perhaps principally for hydrologic and radionuclide transport experiments. Salt mines that have collapsed could be examined to gain insight into backfill and consolidation for repository sealing.

3. Little is known about the geochemical transport of transuranic elements in general, but especially for elements other than plutonium. Therefore, we propose that:

   a. The transport of americium and curium be studied more extensively.

   b. An attempt be made to understand fully transuranic element migration in fractured rock. Transport in fractured media must be understood if we are to be confident of predictions concerning low transport rates through impermeable, nonporous media.

   c. The possibility of using lanthanides as tracers mimicking actinides in transport be investigated because field experiments with transuranics, except those already in the environment, are not possible.

   d. The feasibility of characterizing the source term

(e.g., leachability, particle sizes) and of expanding studies of radionuclide transport in deep formations of the Nevada Test Site should be considered.

4. If deep vault tests cannot be started within the next few years, the Avery Island, Conasauga, and Climax Stock thermal experiments should be extended beyond two years in order to permit the surrounding formations to attain some degree of thermal equilibrium and to permit sufficient data to be collected to provide confidence in our understanding of rock mechanics.

There may be concern that data from these types of experiments cannot be applied to another site because geologic conditions are inherently site specific. The point of testing would be, however, to test for *generic* problems, to make gross suitability comparisons between rock types, and to assess *generic* features of the barriers to waste migration postulated for the concept. While these experiments may not provide *definitive* data on the feasibility of the concept, we believe they will add significantly to our understanding and may disclose unanticipated responses or processes.

In addition, the federal program should recognize that geologic uncertainties may always remain, such that the feasibility may not be able to be confirmed in any rigorous. If this were the case, it would seem prudent *not* to rely on the geology to maintain isolation of the wastes.

Instead, one could utilize multiple engineered barriers as the principal impediment to radionuclide release. One might then evision encasing waste glass beads or spent fuel in a ceramic or rutal matrix, placed in a canister, inside a skill lined vault surrounded by a clay seal in a geologic formation. One in fact would be engineering a system sufficient to contain the waste even if placed in flowing water, and then placing it in a geoloci [*sic*] formulation as one more extra-

precaution [*sic*] (hopefully eliminating [*sic*] any remianing [*sic*] need for surveillance).

In contrast, the present system seems to place primary reliance on geology to confine wastes. The APS Sandy Group has said "our present knowledge of the properties of borosilicate glass as a waste form is inadequate to place reliance on glass as the principal barrier to radionuclide release." (APS p. VII-63). One then must depend on hydrology and sorption for waste barriers. The concept of overwhelming the uncertainties with multiple redundant issolation [*sic*] features is appealing at this time and may be a more direct route to a waste disposal scheme acceptable to the public. We recommend DOE and NRC seriously consider it.

Currently, the only sure method for managing wastes is interim storage with surveillance. Additional setbacks in the program will mean continued reliance on this temporizing solution. The current program structure appears to involve significant risks that repositories will not be put in operation, principally due to isolationsafety [*sic*] concerns. We believe the approaches we have suggested will improve the chances of finding an acceptable disposal method. We do not believe our suggestions will significantly delay the current program. Experimental work can begin soon, especially if licensed sites are not needed. Moreover, the current schedule for WIS may be unduly optimistic. In any event having a repository licensed by 1985 should be secondary to proving out an acceptable disposal method.

4.6 *Approval of Waste Disposal Technology*

Section 25524.2 (California Public Resources Code) conditions new nuclear plant certification of a finding by the Commission that " . . . there has been developed and that the *United States through its authorized agency has ap-*

proved and there exists a demonstrated technology or means for the disposal of high-level nuclear waste."

Appendix B discusses all significant governmental agencies with authority to evaluate and "approve" waste disposal facilities and technology. As that Appendix concludes, the initial steps in the approval process include preparation of a generic environmental impact statement on the technology and preparation of regulatory criteria for licensing facilities. In the waste disposal area, both of these activities have been initiated, but are only in early stages of preparation. NRC has described these activities as follows:

> ERDA [now DOE] . . . has a programmatic EIS on high-level waste management in preparation. ERDA has greatly expanded its program for selection of sites for geologic disposal and is expected to apply to the NRC for a license for such a facility in early 1980 or before. In addition, ERDA is involved in programs to consider the effects on disposal of emplacement of spent fuel rods in a repository. . . . Similarly, the NRC is expanding its own program to set the regulatory requirements for such an operation. The NRC is presently developing a set of regulations to govern licensing of federal repositories to insure that permanent disposal of high-level radioactive wastes will be accomplished safely. (42 Fed. Reg. 34393, July 5, 1977)

As this statement indicates both the programmatic environmental impact statement and the regulatory licensing scheme are in the initial stages of preparation.

The California utilities have suggested that ERDA'S Fiscal Year 1977 budget constituted a transition to implementation of waste disposal technology. Nuclear Industry and California Electric Utilities, *Statement of Position*, "Federal Approvals of Technology" at II-13, May 24, 1977. However, the courts have held that a technology cannot be im-

plemented prior to the completion of an adequate programmatic environmental impact statement (*NRDC v. NRC*, 539 F 2d 824 (1976)). Therefore, since a programmatic EIS is being prepared but is not completed, a decision cannot be made to "implement" the technology.

A proceeding of related interest is NRC's generic environmental proceeding on Uranium Fuel Cycle Impacts from Spent Fuel Reprocessing and Radioactive Waste Management ("Table S-3"), a proceeding in which the Energy Commission is an interested participant. (NRC Docket No. RM-50-3) (42 Fed. Reg. 13803, March 14, 1977) This proceeding involves the incremental environmental impacts for the uranium fuel cycle which are to be included in environmental reports and environmental impact statements for individual light water reactors. The NRC has emphasized that this is not the generic environmental impact statement required prior to the implementation of reprocessing or waste disposal technologies. GESMO is the generic EIS for implementation of reprocessing; and the generic EIS for waste disposal technology is only now being prepared. The NRC in describing the scope and purpose of the Table S-3 proceeding stated:

> "At the outset the Commission wishes to make clear that its purpose in preparing Supplements 1 and 2 and the interim rule [Table S-3] is quite limited. The sole purpose of preparation of Supplement 1 and the rule was to identify and quantify environmental impacts attributable to the reprocessing and waste management portions of the LWR fuel cycle. The environmental impacts so identified are to be used only in the preparation of environmental impact statements for individual light water reactors. Supplement 1 and the rule have fulfilled this purpose. *It was not the purpose of this proceeding to decide which of the various waste management alternatives should or will be employed*

> *practice* [*sic*] or to develop site selection criteria or to define parameters for licensing of any of the Energy Research and Development Administration's (ERDA's) waste management facilities. A separate and comprehensive series of programs has been undertaken to serve these broader purposes. ERDA has several programs in progress *including a program for the preparation of a generic environmental impact statement on high-level waste management*, a program to evaluate geologic formations and specific sites for repositories, programs and research and development of waste solidification methods and development of interim storage sites. *NRC's on-going programs include the preparation of regulations for the licensing of ERDA waste management facilities and activities*, the development of performance criteria for solidified high-level waste and the development of site suitability criteria for high-level waste repositories. (Emphasis added.) (42 Fed. Reg. 13804, March 1977)

It is clear from the NRC's description of the scope of the Table S-3 proceeding that significant activities remain which must be completed before a decision is made to implement a particular waste disposal technology. Completion of the EIS does not itself constitute approval of the technology, however. It is merely a prerequisite to such a decision, and it must be utilized in the decision-making process. The NRC must complete its rulemakings on disposal site licensing criteria before it can approve either a particular waste disposal technology (e.g., bedded-salt disposal) or a particular waste repository site.

A detailed explanation of the various proposals for high-level nuclear waste disposal is included earlier in this report along with a description of the various programs for developing waste disposal technology. As indicated above,

none of these programs has reached the point where the technology may be deemed to have been approved.

The Energy Commission concludes that waste disposal technology has not yet been approved. Both NRC and ERDA are developing programs which, if successfully implemented, may lead to such an approval; however, that point has clearly not been reached.

The Energy Commission's conclusion regarding the status of the waste management problem is supported by increasing numbers of statements from a wide range of government entities, both state and federal. Examples of such statements include the following.

The House Report on the Clean Air Act Amendments of 1977 includes the following assessment of the present status of the waste disposal program:

> Somewhat ominously, however, there is not one of the major categories of radioactive wastes for which adequate disposal plans have been formulated and properly carried out. All have major areas of uncertainty or inadequacy, or both.
>
> In sum, for disposal of four major categories of radioactive waste — spent fuel, decommissioning wastes, gaseous wastes, and purified plutonium — *the needed technology, regulatory requirements, and projected environmental impacts have probably not even begun to be analyzed seriously.*
>
> For the remaining categories — high-level reprocessing wastes, transuranic wastes, and low-level wastes — *major uncertainties and inadequacies plague present disposal programs.*
>
> *Not only is the demonstrated technology for managing these major categories of radioactive wastes either undeveloped or inadequate, but a recent Government-sponsored study has called the existing Government*

> *organization intended to manage the wastes 'unworkable' and has labeled the existing framework for Government regulation of waste disposal programs 'ineffective'. (Emphasis added.)* House Report No. 95-564 at 37-38

The Department of Energy, the agency now responsible for developing a waste disposal facility proposal, in announcing a "New Spent Nuclear Fuel Policy" on October 18, 1977, stated:

> Storage of spent nuclear fuel, however, is an issue which cannot await the outcome of longer term studies for interim resolution. Currently, utilities are faced with the prospect of storing the fuel discharged from reactors for an indefinite period *with no approved plan for ultimately diposing* of it (emphasis added). Department of Energy, *Information*, v. 1, no. 2, October 21, 1977.

Clearly then, while DOE is now developing a waste disposal plan and a specific proposal to demonstrate the feasibility of waste disposal technology, those proposals have not yet been reviewed or approved by the NRC, the agency authorized to render approval (See Appendix B). The Energy Commission is therefore unable to find "that the United States through its authorized agency has approved a demonstrated technology or means for the disposal of high-level nuclear waste."

NRC licensing of the operation of a commercial high-level waste repository would clearly constitute approval under the statute. NRC licensing does not, however, provide absolute assurance that the facility will be available and operating when needed. Such assurance results only from issuance of the last permit, license, or approval which removes the last remaining legal obstacle to operation of the facility (See Appendix B).

In reviewing the federal approval process, the Energy Commission can discern no specific action prior to actual licensing of a repository which will provide the required assurance. As NRC Commissioner Victor Gilinsky testified, NRC approval is phrased not in terms of approving demonstrated technology, but rather, in terms of approving facilities. (Tr., Hearings, January 31, 1977, at 42) Mason Willrich, noted scholar on nuclear regulation, testified that "approval short of [NRC] licensing is always going to be a murky situation." (Tr., March 24, 1977, p. 29)

It may be that when NRC establishes regulations and procedures for licensing waste disposal facilities, it will devise a scheme which provides for some sort of formal approval mechanism for waste disposal technology apart from individual facilities. This seems unlikely, however, since such a suggestion has never been included in any NRC statement regarding waste management regulation. Furthermore, neither the Atomic Energy Act, 42 U.S.C. 2011 *et seq.*, nor the Energy Reorganization Act, 42 U.S.C. 5801 *et seq.*, provides for NRC approval of waste disposal technology apart from individual facilities.

For the Energy Commission to suggest, at present, that no action short of NRC licensing constitutes approval is not inconsistent with the statute. Public Resources Code 25524.2(c) states:

> As used in this section, "technology or means for the disposal of high-level nuclear waste" means a method for the permanent and terminal disposition of high-level nuclear waste. It shall not *necessarily* require that facilities for the application of such technology and/or means be available at the time the commission makes its findings. (emphasis added)

Although this section specifically addresses the fact that availability of specific facilities is not a necessary attribute

of "demonstrated technology", some have suggested that this section argues against NRC licensing as the sole approval mechanism. (See Nuclear Industry and California Electric Utilities, *Statement of Position*, May 24, 19787, [*sic*] Federal Approval of Technology, p. II-36.) Nonetheless, the Utilities have stated:

> We have no quarrel with the suggestion that one of the "authorized agencies" may be the NRC, which has the statutory responsibility for regulating commercial reprocessing and the disposal of high-level wastes. Obviously, one way the Commission can satisfy the requirements of either bills [sic] is to find that the NRC has "approved" the specified technology through actions in the course of establishing the pertinent regulatory framework or in reviewing specific license applications." *Id.*, pp. I-12,13.

Moreover, the Legislature has not, by the plain words of the statute, precluded the Commission from requiring the existence of a specific facility. If the Legislature had intended otherwise, the word "necessarily" would not have been included in this section. The Legislature may have intended for the Commission to review, as it has, the federal approval process to determine whether any action prior to licensing would provide sufficient assurance that waste disposal technology had been approved and would be implemented.

Even under an interpretation which placed approval at some point prior to licensing, approval still has not occurred since the very first steps in the approval process, preparation of a generic EIS on the technology and establishment of regulatory criteria for licensing have not been completed. To reiterate, then, the Commission is unable to find that a demonstrated technology or means for the disposal of high-level nuclear waste has been approved.

WASTE DISPOSAL
REFERENCES

1. Angino

   Angino, E.E.., "High-Level and Long-Lived Radioactive Waste Disposal," in *Science*, Vol. 198, December 2, 1977, p. 885.

2. APS

   American Physical Society, *Report to the American Physical Society by the Study Group on Nuclear Fuel Cycles and Waste Management*, July 1977.

3. Apt, et al.

   Apt, K. E., Bryant, E. A. and Brookins, D. G. "Oklo-Geologic Isolation Implications" in *Proceedings of the Symposium on Waste Management*, Tucson, Arizona, October 3-6, 1976, CONF-761020, Roy G. Post (Ed.), p. 200.

4. Bishop, et al.

   Bishop, W.P.; Malaro, J.; and Hewitt, W. (Office of Nuclear Material Safety and Safeguards), "NRC and Nuclear Waste: The Process for Decisions," paper given at Atomic Industrial Forum Fuel Cycle Conference '77, Kansas City, Missouri, April 1977.

5. Blomeke and Roberts, 1965

   Blomeke, J. O. and J. T. Roberts. "Waste Management," *Annual Reviews of Nuclear Science*, 1965, p. 157.

6. BNWL-1927

   Burkholder, H.C., et al. for Battelle Pacific Northwest Laboratories. *Incentives for Partitioning High-Level Waste*, BNWL-1927, November 1975.

7. BNWL-2052

   Battelle Pacific Northwest laboratories. *Quarterly*

Progress Report LWR Fuel Recycle Program, January-March, 1976, BNWL-2052, April 1976.

8. BNWL-2252
   Mendel, J. E., et al. (Battelle Pacific Northwest Laboratories), *Annual Report on the Characteristics of High-Level Wast [sic] Glasses*, BNWL-2252, June 1977.
9. BNWL-2256
   Johnson, A.B. Jr. for Battelle Pacific Northwest Laboratories. *Behavior of Spent Nuclear Fuel in Water Pool Storage*, BNWL-2256, September 1977.
10. CONF-770102
    U.S. ERDA. *Ceramic and Glass Radioactive Waste Forms*, Summary of a Workshop Held at ERDA - Germantown, January 4, 1977, CONF-770102.
11. Cowan
    Cowan, G.A. "A Natural Fission Reactor," in *Scientific American*, Vol. 235, Number 1, p. 36, July 1976.
12. DeBuchananne 1974
    DeBuchananne, G.D. "Geohydrologic Considerations in the Management of Radioactive Waste" in *Nuclear Technology*, December 1974, p. 356.
13. de Marsily, et al.
    de Marsily, G.; Ledoux, E.; and Margat, J. "Nuclear Waste Disposal: Can the Geologist Guarantee Isolation?" in *Science*, Vol. 197, p. 519, August 5, 1977.
14. Empson, et al.
    Empson, F.; Bradshaw, R.; McClain, W.; and Houser, B.; "Results of the Operation of Project

Salt Vault: A Demonstration of Disposal of High Level Radioactive Solids in Salt," *Third Symposium on Salt*, p. 460, (Northern Ohio Geological Society).

15. EPA 40 CFR 190
U.S. Environmental Protection Agency. *Environmental Radiation Protection Requirements for Normal Operations of Activities in the Uranium Fuel Cycle*. Final Environmental Statement (2 Vols.) EPA 520/4-76-016, November 1, 1976.

16. ERDA 77-25
U.S. Energy Research Development Administration. *LWR Spent Fuel Disposition Capabilities 1977-1986*, May 1977.

17. Ford/MITRE
Report of the Nuclear Energy Policy Study Group, *Nuclear Power issues and Choices*, sponsored by the Ford Foundation, administered by the MITRE Corporation, 1977.

18. GAO, 9/9/77
Comptroller General of the United States. *Nuclear Energy's Dilemma: Disposing of Hazardous Radioactive Waste Safely*, September 9, 1977.

19. Hambleton, 1972
Hambleton, W. W. "The Unsolved Problem of Nuclear Wastes" in *Technology Review*, March/April 1972, p. 15.

20. Holdoway
Holdoway, K. "Behavior of Fluid Inclusions in Salt During Heating and Irradiation," *Fourth International Symposium on Salt*, p. 310 (Northern Ohio Geological Society).

21. House Committee, 1977
House of Representatives Committee on Government Operations. *West Valley and the Nuclear Waste Dilemma*, House Report No. 95-755, October 1977.

22. House Interior Committee, 1977
House of Representatives Committee on Interior and Insular Affairs (Subcommittee on Energy and the Environment), Oversight Hearings on Nuclear Waste Management, Serial No. 95-15, May 16, 17 and 20, 1977.

23. JPL 77-69
Jet Propulsion Laboratory. *An Analysis of the Technical Status of High Level Radioactive Waste and Spent Fuel Management Systems*, prepared for CERCDC, JPL Publication 77-69, December 1, 1977.

24. JPL/OSTP
Jet Propulsion Laboratory. *An Analysis of the Back End of the Nuclear Fuel Cycle with Emphasis on High-Level Waste Management*, prepared for the Office of Science and Technology Policy, JPL Publication 77-59, August 12, 1977.

25. Kuhn, et al.
Kuhn, K., et al. "Recent Results and Developments on the Disposal of Radioactive Wastes in the Asse Salt Mine" (IAEA-SM-207/82) in *Management of Radioactive Wastes from the Nuclear Fuel Cycle*. Proceedings of a Symposium, Vienna, jointly organized by the IAEA and NEA (OECD), March 22-16, 1976, Vol. II, p. 287.

26. Leachman and Bishop
Leachman, R. B. and W. P. Bishop. "Relevance

of Natural Retention Experience to Nuclear Waste Management," Technical Committee on Natural Fission Reactors, 19-21 December 1977, Paris, IAEA/TC/119/30.

27. Merritt, 1976
Merritt, W.F. "The Leaching of Radioactivity from Highly Radioactive Glass Blocks Buried Below the Water Table" (IAEA-SM-207/98) in *Management of Radioactive Wastes from the Nuclear Fuel Cycle*, Proceedings of a Symposium, Vienna, jointly organized by the IAEA and NEA (OECD), March 22-26, 1976, Vol. II, p. 27.

28. Meyer, 1976
Meyer, G. L. "Recent Experience with the Land Burial of Solid Low-Level Radioactive Wastes," (IAEA-SM-207/64) in *Management of Radioactive Wastes from the Nuclear Fuel Cycle*, Proceedings of a Symposium, Vienna, jointly organized by the IAEA and NEA (OECD), March 22-16, 1976, Vol. II, p. 383.

29. NAS-NRC, 1957
National Academy of Sciences - National Research Council Committee on Waste Disposal, *The Disposal of Radioactive Wate [sic] on Land*, April 1957.

30. NAS-NRC, 1966
National Academy of Sciences - National Research Council Committee on Geologic Aspects of Radioactive Waste Disposal, *Report to the Division of Reactor Development and Technology*, U.S. Atomic Energy Commission, May 1966.

31. NRC 1978 Appropriations
Nuclear Regulatory Commission Appropriations

for Fiscal Year 1978, Hearings Before the Subcommittee on Energy and the Environment of the Committee on Interior and Insular Affairs, House of Representatives, February 17 and 18 and March 8, 1977.

32. NRC Response

U.S. Nuclear Regulatory Commission. Responses to Questions Submitted by Participants in Teble [*sic*] S-3 Proceedings, NRC Docket No. RM 50-3, Environmental Effects of the Uranium Fuel Cycle, Amendment of 10 CFR Part 51.

33. NUREG-0002

U.S. Nuclear Regulatory Commission. *Final Generic Environmental Statement on the Use of Recycle Plutonium in Mixed Oxide Fuel in Light Water Cooled Reactors*, NUREG-0002, August 1976.

34. NUREG-0016

Office of Nuclear Managerial Safety and Safeguards, U.S. Nuclear Regulatory Commission. *Environmental Survey of the Reprocessing and Waste Management Portions of the LWR Fuel Cycle*, NUREG-0116 (Supp. 1 to WASH-1248), October 1976.

35. NUREG-0216

Office of Nuclear Materials Safety and Safeguards, U.S. Nuclear Regulatory Commission. *Public Comments and Task Force Responses Regarding the Environmental Survey of the Reprocessing and Waste Management Portions of the LWR Fuel Cycle (NUREG-0116)*, NUREG-0216 (Supp. 2 to WASH-1248), March 1977.

36. NUREG-0279

Lawrence Livermore Laboratory for U.S. Nuclear Regulatory Commission. *Determination of Performance Criteria for High-Level Solidified Nuclear Waste*, NUREG-0279, July 1977.

37. NUREG-0326

U.S. NRC, Waste Management Staff. Workshop Material for State *Review of NRC Site Suitability Criteria for High-Level Radioactive Waste Repositories*, NUREG-0326, September 1977.

38. NUREG-0353

U.S. NRC. *Workshops for State Review of Site Suitability Criteria for High-Level Radioactive Waste Repositories*, NUREG-0353, October 1977.

39. OECD

Report by a Group of Experts of the OECD Nuclear Energy Agency, *Objectives, Concepts and Strategies for the Management of Radioactive Waste Arising from Nuclear Power Programmes*, September 1977.

40. ORNL-4555

Bradshaw, R.L. and McClain, W.C., eds. (Oak Ridge National Laboratory). *Project Salt Vault: A Demonstration of the Disposal of High-Activity Solidified Wastes in Underground Salt Mines*, ORNL-4555, April 1971.

41. ORNL-5052

McClaim, W.C.; Lomenick, T.F.; and Lowrie, R.S. (Oak Ridge National Laboratory), *Geologic Disposal Evaluation Program Semi-annual Report for Period Ending March 31, 1975*, ORNL-5052, July 1975.

42. ORNL-5058

Jenks, G.H. and Bopp, C.D. (Oak Ridge National Laboratory). *Storage and Release of Radiation Energy in Salt in Radioactive Waste Repositories*, ORNL-5058, October 1977.

43. ORNL-TM-4639

Clairborne, H.C., and Gera, F. (Oak Ridge National Laboratory) *Potential Containment Failure Mechanisms and Their Consequences at a Radioactive Waste Repository in Bedded Salt in New Mexico*, ORNL-TM-4639, October 1974.

44. ORNL/TM-5764

Blomeke, J. L. (Oak Ridge National Laboratory). *1972 Preliminary Safety Analysis Report Based on a Conceptual Design of a Proposed Repository in Kansas*, ORNL/TM-5764, August 1977.

45. Penn State

Pennsylvania State University Materials Research Laboratory, National Waste Terminal Storage Program Conference on Waste-Rock Interactions, Y/OWI/SUB-77/14268, July 6-7, 1977.

46. Stannard, 1975

Stannard, J.N. "Toxicity of the Transuranium Elements with Special Emphasis on Plutonium" in *Health and Safety Laboratory Environmental Quarterly*, HASL-291, April 1, 1975, p. 19.

47. TAD

U.S. Energy Research and Development Administration, *Alternatives for Managing Wastes from Reactors and Post-Fission Operations in the LWR Fuel Cycle*, ERDA-76-43, (five volumes), May 1976.

48. Transcript of ERDA Press Conference
Press Conference on ERDA Waste Disposal Program, December 2, 1976, Washington, D.C.

49. USGS, 1976
United States Geological Survey. *Program in Support of the National Waste Terminal Storage Program*, submitted to the U.S. Energy Research and Development Administration, December 1976.

50. USGS Notes, 1977
Notes on October 25, 1977, meeting attended by Newell Trask, Warren Wood, and George DeBuchananne of United States Geological Survey and Michael Ringer of California Energy Resources Conservation and Development Commission, reviewed and approved by George D. DeBuchananne, transmitted November 29, 1977.

51. USGS Responses
U.S. Geological Survey, Responses to Questions Submitted by Participants in Table S-3 Proceedings, NRC Docket No. RM 50-3, Environmental Effects of the Uranium Fuel Cycle, Amendment of 10 CFR Part 51.

52. Willrich,et al., 1976
Willrich, M. with S. Greenberg, R. Lester, H. Mitchell, and D. Walker for U.S. ERDA. *Radioactive Waste Management and Regulation*, December 1976.

53. Y/OWI-8
Office of Waste Isolation. *National Waste Terminal Storage Program Progress Report for Period April 1, 1975, to September 30, 1976*, Y/OWI-8, November 30, 1976.

54. Y/OWI/INF-3/3
Office of Waste Isolation. *National Waste Terminal Storage Program Progress Report December 1976*, January 18, 1977, Y/OWI/INF-3/3.

55. Y/OWI/INF-3/11
Office of Waste Isolation. *National Waste Terminal Storage System Progress Report August 1977*, Y/OWI/INF-3/11.

56. Y/OWI/SUB-76/16515
D'Appolonia Engineers for Office of Waste Isolation. *Preliminary State-of-the-Art Survey: Mining Techniques for Salt and Other Rock Types*, Y/OWI/SUB-76/16515, December 1976.

57. Y/OWI/SUB-76/81726
Logan, S. for Office of Waste Isolation. *Workshop on Geologic Data Requirements for Radioactive Waste Management Assessment Models*, Y/OWI/SUB-76/81726, September 1976.

58. Y/OWI/SUB-76/99068
Herndon, J. and Smith, D.R. for Office of Waste Isolation. *Plugging Wells for Abandonment*, Y/OWI/SUB-76/99068, September 1976.

59. Y/OWI/SUB-77/22320
Stanford Research Institute for Office of Waste Isolation. *Proposed Outline of Safety Analysis Report for Facilities for Geologic Isolation of Radioactive Wastes*, Y/OWI/SUB-77/22320, June 1977.

60. Y/OWI/SUB-3745/4
Piper, A.M. for Office of Waste Isolation. *Rock Types, Also Geologic and Hydrologic Settings, Favorable to Deep Placement of High-Level Radioactive Wastes*, Y/OWI/SUB-3745/4, October 1974.

61. Y/OWI/TM-18/1

Frye, J.C., et al., for Office of Waste Isolation. *Summary of Geologic Review Group Meeting*, January 20-21, 1977, Y/OWI/TM-18/1, March 7, 1977.

62. Y/OWI/TM-18/2

Frye, J.C., et al., for Office Waste Isolation. *Summary of Geologic Review Group Meeting, March 17-18, 1977 and May 26-27, 1977*, Y/OWI/TM-18/2, July 18, 1977.

63. Y/OWI/TM-20

Conter, N.L.; Goodman, R.E.; and Merrill, R.H. for Office of Waste Isolation. *Summary Review of Rock Mechanics Workshop on Radioactive Waste Disposal*, Y/OWI/TM-20, February 7, 1977.

64. Y/OWI/TM-24

Clairborne, H.C. (Office of Waste Isolation). "The United States Program for the Safety Assessment of Geologic Disposal of Commercial Radioactive Wastes," Y/OWI/TM-24, Paper presented at the Workshop on Risk Analysis and Geologic Modeling, Ispra, Italy, May 23-27, 1977.

65. Y/OWI/TM-25

Fairchild, P.D. and Russell, J.E. (Office of Waste Isolation). *In-Situ Experiments Related to Waste Repository Design*, Y/OWI/TM-25, August 1977.

APPENDIX A: EXISTENCE AND DEMONSTRATION OF TECHNOLOGIES

California Public Resources Code (PRC) Sections 25524.1 and 25524.2 condition new nuclear power plant certification on findings by the Energy Commission that "there exists a technology for the construction and operation of reprocessing plants" and that "there has been developed . . . and there exists a demonstrated technology or means for the disposal of high-level nuclear waste." Although the statutory sections employ different language, they establish similar tests for evaluating a technology. This appendix sets forth a background of considerations concerning the interpretation of these terms in the statutes in order to arrive at consistent definitions that can be employed directly in the review of the technologies for reprocessing and nuclear waste disposal. The review examines the interpretation by the courts of similar language in various federal laws, the tests applied in patent law, and several verbal formulas proposed to the Commission or published in formal reports.

A technology develops along a continuum from scientific theory to, if all steps are successful, practical and routine application. The Energy Commission must determine which milestone along the path of development represents clear and convincing evidence of the existence or demonstration of each subject technology. Clearly, an affirmative finding under either statute requires more then a favorable characterization of each technology as theoretically sound. Section 25524.1(a) concerns the existence of a technology for the *construction and operation* of reprocessing plants; and Section 25524.2 the existence of a *developed and demonstrated* technology or means for disposal of high-level

waste. Thus, each statute outlines a test more rigorous than the mere existence of each technology detached from practical application.

Guidance From Court Decisions

The experience of other government agencies in implementing statutes requiring findings about the status of technologies provides considerable guidance for determining when a technology exists or has been demonstrated.

Federal statutes, including the Clean Air Act, the Federal Water Pollution Control Act, the Noise Control Act, the Occupational Safety and Health Act and the National Traffic and Motor Vehicle Safety Act, require designated agencies to determine the status of technologies in terms of standards such as: "the best technological system . . . adequately demonstrated," "the best available demonstrated control technology," "the best practicable control technology currently available," "the best available technology economically achievable," "the best available technology," and whether a technology is "effective," "practicable," "feasible" or "available." 15 USC 1392(a); 29 USC 655(b)(5); 33 USC 1311(b)(1)(A), 1311(b)(2)(A), 1316(a)(1); 42 USC 1857c-5(a)(2)(A), 1857c-5(e)(1), 1857c-6(a)(1), 1857c-7(c)(2), 1857f-1(b)(5)(C), 4916(a)(1). Court decisions interpret the Patent Act, revised in 1952, to condition patent protection upon the "operability" of the invention and its "reduction to practice," terms akin to "existence" and "demonstration" of technology. See 34 USC 101-102; A. Deller, *Walker on Patents*, 1964, at Sections 46, 92, 95.

Litigation pertaining to these statutory provisions may be summarized in relaively brief terms:

1. In auto emission control litigation, the courts found that "effective control technology" was not "available" because no car had been tested over its op-

erating lifetime; the effectiveness of the devices might be impaired by lack of owner maintenance or by automobile malfunctions unrelated to the emission control system; and auto manufacturers might be unable to retool fast enough to meet the demand for new cars.

2. In litigation over new source air pollution control standards of performance, the courts found that "adequately demonstrated technology" had not been established by tests at only two plants or at plants operating at less than full capacity or by tests excluding abnormal plant operating conditions. Self-interested testimony of pollution control equipment vendors was rejected, as was a technology that produced an unresolved problem—sludge.
3. In litigation over air pollution standards for existing sources, the courts found "practicable" emission control technology that had been successfully utilized elsewhere but rejected as not "practicable" technology that had not been previously employed under very similar circumstances: Emission control systems for coal-fired power plants were rejected if not previously tested in plants of large capacity operating under severe load fluctuations, with limestone scrubbers guaranteed by their manufacturers, with coals of various sulfur contents, without liquid discharges, and using technology sufficiently demonstrated to merit the praise of the plant owners and operators.
4. In litigation over state air pollution control implementation plans, the courts found that control technology demonstrated at only a single plant or in plants which had experienced "operating problems" and which was not supported by unconditional guarantee "to be not technically feasible and economically rea-

sonable." Compliance with a state plan was deemed "impossible" because no system had been demonstrated on a plant of large capacity without the disadvantages of various deposits, water emissions or plant shutdowns.

5. In litigation over new source water pollution control standards of performance, the courts found "demonstrated technology available" if the standards had previously been fully achieved at full-scale plants for a sufficiently long test period. The courts rejected technologies not demonstrated under realistic operating conditions, including start-up and process interruptions, cold weather and catastrophic rainfall. Also rejected were technologies demonstrated only in atypical plants or plagued by unresolved problems (plugging, scaling, corrosion, etc.). The courts rejected expert testimony not corroborated by actual experience of emission control systems at operating facilities. Predictions of performance contained in environmental impact statements did not constitute demonstration. Finally, the courts rejected technologies if their applications would result in serious adverse economic or environmental side-effects (groundwater contamination, air pollution, etc.).

6. In litigation over the 1977 water pollution control standards for existing sources, the courts found "practicable technology currently available" if operating commercial plants in the United States or abroad had achieved the standard under various conditions, including cold weather, hot weather, start-up and excessive rainfall. Courts did not accept evidence from atypical operations, such as those with smaller waste loads or with unusually large adjacent land areas for disposal purposes, although one court

did consider data from a plant using a technology admittedly less efficient than the one relied upon by EPA. Technologies successfully employed in a different industry were accepted if demonstrated to be applicable to the subject industry but were rejected if the transferability was not supported by sufficient evidence. In determining the practicability of technologies, the courts considered their adverse side-effects, such as increased use of water in arid regions.

7. In litigation over the 1983 water pollution control standards for existing sources, the courts found "economically achievable technology available" if EPA could reasonably demonstrate that the system could be in use by 1983. Many standards were approved subject to further evaluation upon failure of control technology to develop as envisioned by EPA. To qualify, technology must be able to achieve the standards under operating conditions, including cold weather and catastrophic rain, and pilot-scale demonstrations must be shown applicable to full-size operations.
8. In litigation over occupational safety and health standards, the courts found "feasible" technologies which had already been successfully employed in the industry. Although the statute was characterized as "technology-forcing," courts rejected technologies found to be prohibitively expensive.
9. In litigation over traffic safety standards, one court found not "practicable" requirements not met in 17 to 28 percent of the retreaded tire tests, although another court concluded that the federal agency could issue standards requiring improvements in existing technology or development of new technology.

10. Finally, in patent litigation over the utility of inventions, the courts have required demonstration that alleged inventions are capable of performing their claimed function under conditions of practical operation. In litigation concerning the reduction to practice of inventions, the courts have required demonstration under service conditions at a size capable of practical use that the invention will produce the desired result in the environment where it will be used.

A more elaborate description of litigation involving various technology evaluating actions of agencies under these statutes is included as the final part of this appendix.

Although these federal statutes require the classification of technologies into categories (available, demonstrated, etc.), their purposes are different from that of the California nuclear fuel cycle statutes. As the courts have repeatedly emphasized, the federal pollution control and safety laws are "technology-forcing" as well as technology-evaluating. The federal acts are designed to enable government agencies to encourage the development of pollution control and safety technologies by establishing requirements that necessitate technological advances. Conversely, the California statutes are designed to encourage evaluation of nuclear fuel cycle technologies, not necessarily to stimulate development of those technologies. Thus, while the agencies implementing the pollution control and safety acts should classify borderline technologies as "available" or "demonstrated" in order to encourage their development, the Commission should not necessarily find borderline fuel reprocessing or waste disposal technologies to "exist."

Despite the dissimilar purpose of these other enactments, litigation over their implementation has provided useful definitions pertaining to the status of technologies. In general, courts have found a technology to be effective, avail-

able or currently available, demonstrated or adequately demonstrated, practicable, economically achievable or economically reasonable, feasible or technically feasible, operable or reduced to practice only if it has satisfied the following conditions:

1. Successful testing
   a. At full scale, full size, full capacity or large capacity;
   b. Under expected operating conditions, including start-up, input variations, output fluctuations, process interruptions, imperfect maintenance, malfunction of related systems and unusual environmental circumstances;
   c. Documenting the absence of offsetting disadvantages (enviornmental, [*sic*] cost or other);
   d. Over expected operating lifetime, if possible.
2. Successful operation, demonstrating
   a. Technical feasibility;
   b. Economic practicality;
   c. Environmental acceptability; and
   d. Reliability.

Courts generally have accepted evidence based upon tests of operating commercial facilities but have rejected the testimony of experts whose statements were not supported by operational testing. Courts have accepted the unconditional guarantees of manufacturers as evidence supporting the availability of technologies but have rejected guarantees subject to conditions and the unguaranteed claims of manufacturers. Courts have accepted the projections of owners or operators of facilities that they would not again employ the subject technology in future plants as evidence of its unacceptability and have rejected the optimistic predictions of government agencies contained in environmental impact

statements. In sum, courts have accepted evidence based on actual experience but have rejected evidence based on speculation.

Guidance from Publications and Testimony

Suggestions on defining "existing" and "demonstration" are also contained in the hearing record, submissions to the Energy Commission and reports addressing similar considerations. Dr. Joseph Lieberman, testifying on behalf of the California utilities, defined a "demonstrated" technology as:

> The level of technology when enough engineering information has been developed at laboratory, bench and/or pilot plant-prototype scale that competent governmental or commercial groups would be able, if they so desired, to design and build a full-scale plant or facility to perform the process to accomplish the defined mission. Demonstration technology does not require prior operations under actual working conditions, or at expected scale of activities, or for expected periods of operation, or at expected scale of activities, or for expected periods of operation, so long as sufficient information has been developed to provide confidence that successful operations can be accomplished. (*Commission Hearings*, March 21, 1977, at 70-71)

This definition is not consistent, however, with the court decisions finding operation at full scale and under working conditions prerequisite to "demonstration."

Floyd Culler of Oak Ridge National Laboratory defined "demonstration" as the "first few months or first year of operation of a full-scale production facility," although he concluded that pilot plant operation "could be considered as a demonstration that the technology probably will work." (*Commission Hearings*, March 8, 1977, at 55-56)

A report to ERDA by Booz, Allen and Hamilton, Inc., shows that the development/demonstration/engineering phase to be completed when the marketing phase begins—when the technology begins to generate revenue for the investor. (Booz, Allen and Hamilton, Inc., *Introduction to the Analysis of Commercialization Conditions*, ERDA-76-99, July 1976, at II-1.) It displays the demonstration plant/commercial model step as following the pilot plant/prototype step and concludes that the demonstration plant step is preceded by "determination of whether or not the product meets government standards and regulations." The report lists cost-effectiveness and reliability as "development and demonstration barriers." (*Id.* at II-6)

Another participant in the informational hearings, the Sierra Club, offered the concept of "reasonable doubt" as a tool in judging the existence of technology, suggesting that, if there is reasonable doubt whether a technology can function safely and in the manner intended, the Energy Commission should find that the technology does not exist. (*Sierra Club Comment*, November 10, 1977, at II-4)

The Sierra Club's witness at the hearings, Marvin Resnikoff, suggested that a "demonstrated technology" is "one that has performed with low occupational exposures, with minimal radiation releases to the environment, minimal plutonium losses, is commercially viable, with some tolerance to human error, with management commitment to health and safety, and a regulatory commitment to the public interest." (*Commission Hearings*, March 7, 1977, at 141-42)

In addition to these suggested definitions, the Commission received numerous others. The comments presented here are merely intended to illustrate the range of opinions expressed.

Conclusion

The Commission has determined, after carefully reviewing the testimony, comments, and court decisions, that the existence, demonstration and development of technology can only be established by extensive testing which convincingly establishes that a technology will achieve its purpose consistently without offsetting disadvantages. Definitions which the Commission has adopted for each term are presented below. These definitions are consistent with the Commission's obligations under the statutes to carefully scrutinize the developmental status of reprocessing and waste disposal technology.

1. A technology "exists" if there is a technique or method upon which enough information is available from testing at bench, pilot or semi-work scale under conditions approximating those under which it must perform in actual use to establish convincingly that the technology can achieve its intended purpose consistently without prohibitive offsetting disadvantages.

   This definition is similar to patent law concepts of utility, operability and reduction to practice.

2. A technology exists for the construction and operation of a plant if the technology has been comprehensively tested under expected operating conditions, including start-up, input variations, output fluctuations, process interruptions, imperfect maintenance, malfunction of related systems and unusual environmental conditions at a reasonable scale (either from actual full-scale operation or a pilot or semi-works scale plant) to establish convincingly that the technology can operate consistently, reliably, routinely, and within prescribed occupational and public

safety, emissions and safeguards limits over extended periods of time.

Existence of a technology for operation of a plant is closely related to an "available, practicable technology" as used in the Clean Air Act.

3. A technology has been developed and demonstrated if it can achieve its intended purpose reliably, without offsetting disadvantages such as threats to occupational or public safety, environmental quality or national security, and within prescribed safety, emissions and safeguards limits. These qualities must be shown to be achievable through previous operation of the technology or through comprehensive testing at a pilot or prototype scale under conditions approximating actual use including abnormal, upset or unusual conditions.

The two concepts of "existence for plant operation" and "developed and demonstrated" are very similar. The simple "existence" of a technology is a less stringent condition and is included only for comparative purposes.

Review of Relevant Litigation

This summary review of the litigation concerning agency decisions involving the status of technologies provides a more detailed discussion of the cases which have arisen under the Clean Air Act, the Federal Water Pollution Control Act, the Occupational Safety and Health Act and the National Traffic and Motor Vehicle Safety Act. A brief review of relevant patent law is also included.

I. Air Pollution Control.

A. Automobile Emissions.

The Clean Air Amendments of 1970 authorized the Environmental Protection Agency (EPA) to grant a one-year suspension of automobile emission standards if, *inter alia*,

the Administrator were to determine that the applicant for a suspension had "established that effective control technology, processes, operating methods, or other alternatives are not available." 42 USC 1857-f-1(b)(5)(C). In *International Harvester Co. v. Ruckelshaus*, 478 F.2d 615 (D.C. Cir. 1973), the court remanded the Administrator's denial of a suspension application because EPA's methodology had not "overcome a conclusion, a lack of available technology, supported prima faciely by the only actual and observed data available, the manufacturers' testing." 478 F.2d at 648. EPA had attempted to justify its denial upon tests in which only one car actually met the proposed standards and no car was driven 50,000 miles, the statutory duration of the standards for each car. The court stated that EPA need not consider solely "technology in being" but could also consider "the 'probable' or likely sequence of the technology already experienced." 478 F.2d at 628. "[W]e hasten to add that the Administrator's latitude for projection is subject to the restraints of reasonableness, and does not open the door to 'crystal ball' inquiry." 478 F.2d at 629, citing *NRDC v. Morton*, 458 F.2d 827, 837 (D.C. Cir. 1972). Nevertheless, the court found unconvincing EPA's finding that the technology would be available in time to enable compliance with the proposed standards. EPA had not adequately explained its failure to consider several potential problems: owners would not maintain their emission control systems in perfect conditions; even with perfectly operating systems, other malfunctions of the car could result in emissions violating the standards; and Engelhard catalysts might not function as efficiently in General Motor's cars as in Ford's. In addition, the automakers contended that the production and retooling capacity did not exist for complying with the standards while meeting the demand for new cars. The court found fault with EPA's failure to answer

this objection, stating that the Act conditioned denial of a suspension upon a finding of technology sufficient "to meet a basic level of consumer demand." 478 F.2d at 641. "The Administrator would say that it is enough to validate the principle of the electric light bulb if only one is seen at work." 478 F.2d at 647. Rejecting the EPA view, the court concluded:

> We think the vehicle manufacturers established by a preponderance of the evidence, in the record before us, that technology was not available, within the meaning of the Act, when they adduced the tests on actual vehicles; that the Administrator's reliance on technological methodology to offset the actual tests raised serious doubts and failed to meet the burden of proof which in our view was properly assignable to him . . . . 478 F.2d at 648.

Thus, although EPA was not restricted from denying a suspension on the basis of projected technological developments, the court relied upon data from tests of actual operating automobiles and considered the likely deterioration of emission control performance with age and use of the cars and the inability of automakers to comply with the standards while also producing a sufficient number of cars.

B. Stationary Source Emissions.

(1) New Source Standards of Performance.

The Clean Air Amendments of 1970 directed EPA to require that new stationary sources of air pollution comply with standards of performance reflecting "the degree of emission limitation achievable through the application of the best system of emission reduction which (taking into account the cost of achieving such reduction) the Administrator determines has been adequately demonstrated." 42 USC 1857c-6(a)(1). The Clean Air Act Amendments of

1977 (1977 CAAA) modified the definition of "standard of performance" to require "the degree of emission limitation and the percentage reduction achievable through application of the best technological system of continuous emission reduction which (taking into consideration the cost of achieving such emission reduction, any nonair quality health and environmental impact and energy requirements) the Administrator determines has been adequately demonstrated." 1977 CAAA Section 109(c)(1)(A). The 1970 and 1977 definitions are essentially similar. Both restrict EPA standards to the emission control achievable with "adequately demonstrated" technology, and both require that EPA consider the disadvantages of any technology along with its ability to reduce emissions.

Portland Cement Association v. Ruckelshaus, 486 F.2d 375 (D.C. Cir. 1973), cert. denied, 417 US 921 (1974), rejected the cement manufacturers' contention that a technology was not adequately demonstrated unless an existing cement plant was using it and meeting the proposed standard. Because the standard applied only to new cement plants, the court ruled that EPA could "make a projection based on existing technology, though that projection is subject to the restraints of reasonableness and cannot be based on 'crystal ball' inquiry." 486 F.2d at 391, citing *International Harvester*. Nevertheless, the court directed EPA to reconsider its proposed standards of performance for new cement plants after finding fault with EPA's reliance upon tests at two operating facilities. The cement manufacturers claimed that the data base was too small, that EPA had used improper emission measuring techniques, that one of the test plants had not been operating at full capacity and that emission samples were taken only during normal operations, not during start-up or process interruptions, "inescapable aspect[s] of industrial life." 486 F.2d at 398. The court

also warned against reliance on statements by vendors of emission control devices, who had offered to guarantee that their systems could meet the proposed standard except during start-up and interruptions. Their claims were biased by their interest in selling their products to the cement plants. See 486 F.2d at 400. "[T]he technology may not be one which constitutes a purely theoretical or experimental means of preventing or controlling air pollution." 486 F.2d at 391, quoting *H.R. Rep. No. 1146*, 91st Cong., 2d Sess. 10 (1970).

In *Essex Chemical Corporation v. Ruckelshaus*, 486 F.2d 427 (D.C. Cir. 1973), the court defined an "adequately demonstrated system" as "one which has been shown to be reasonably reliable, reasonably efficient, and which can reasonably be expected to serve the interests of pollution control without becoming exorbitantly costly in an economic or environmental way." 486 F.2d at 433. "This does not require that a sulfuric acid plant be currently in operation which can at all times and under all circumstances meet the standards; nor, however, does it allow the EPA to set the standards solely on the basis of its subjective understanding of the problem or 'crystal ball' inquiry." 486 F.2d at 433, citing *Portland Cement*. The court upheld the sulfur dioxide standard for sulfuric acid plants using elemental sulfur feedstock based on a series of tests conducted by American Cyanamid Company at its Warners plant. The court questioned the validity of EPA tests at the same plant, however, because it was running only at half capacity when the EPA samples were taken. The court also rejected the conclusions of literature about European plants that did not specify the level of operations at the time of the testing. 486 F.2d at 436.

The court found the sulfur dioxide standard for sulfuric acid recycle plants to be supported by a series of tests at

an Olin Chemicals Company plant using a sodium sulfite-bisulfite scrubber while operating at near full capacity. 486 F.2d at 438. The standard was remanded, however, because EPA had failed to indicate how the plants could dispose of the purge waste from the scrubber system. 486 F.2d at 439. For control of sulfur dioxide from coal-fired power plants, the court found EPA's standard supported by "tests of prototype and full-scale control systems, considerations of available fuel supplies, literature sources, and documentation of manufacturer guarantees and expectations," 486 F.2d at 440, but this standard was also remanded for EPA consideration of methods for disposing of the sludge resulting from the recommended limestone scrubbing system. Thus, the court was unwilling to find "adequately demonstrated" a technology which, although capable of achieving its primary purpose, would generate adverse side-effects.

In *National Asphalt Pavement Association v. Train*, 539 F.2d 775 (D.C. Cir. 1976), the court upheld the EPA standard for particulate emissions from asphalt concrete manufacturers on the basis of EPA tests at four plants showing emission levels well below the proposed standard and other test results submitted by state and local authorities. The court rejected the claims of the asphalt manufacturers that EPA had failed to consider several variables affecting performance of emission control systems. 539 F.2d at 786-87.

2. Standards for Existing Sources.

(a) EPA Approval of State Implementation Plans.

The Clean Air Amendments of 1970 directed EPA to approve state implementation plans which, *inter alia*, "provide[ ] for the attainment of such primary standard as expeditiously as practicable but . . . in no case later than

three years from the date of approval of such plan." 42 USC 1857c-5(a)(2)(A)(i). The statute requires state plans to attain material secondary ambient air quality standards within "a reasonable time." In *Granite City Steel Company v. EPA*, 501 F.2d 925 (7th Cir. 1974), the company petitioned for review of the compliance schedule promulgated by EPA in furtherance of the Illinois implementation plan for control of emissions from coke pushing and quenching operations. The court noted that an identified system of emission control already in operation elsewhere could have been implemented by Granite City Steel on the EPA time schedule. The experience of other plants in Missouri and West Germany had demonstrated that "adequate technology was available in time." 501 F.2d at 927.

In *Duquesne Light Company v. EPA*, 522 F.2d 1186 (3d Cir. 1975) (*Duquesne Light II*), the court rejected EPA's approval of the Pennsylvania implementation plan for control of sulfur oxide emissions from coal-fired power plants, finding insufficient evidence that the recommended scrubbing technology was available. The court permitted the Administrator to "make reasonable projections of future technological growth . . . subject to the restraints of reasonableness." 522 F.2d at 1197. Duquesne Light and the other utilities urged rejection of evidence about effective scrubber systems operating in Japan, because the systems were installed at plants not subject to load fluctuations characteristic of utility power plants, because they did not operate with coals of various sulfur contents, because they discharged liquid wastes not permitted in Pennsylvania, and because they used a carbide sludge somehow unavailable to Pennsylvania utilities. EPA pointed out that a Japanese plant complying with the proposed standard had experienced load fluctuations, had operated with a variety of coals and had periodically operated without liquid discharges. In ad-

dition, EPA stated that the difference between carbide and limestone sludge was not significant. The court rejected EPA's Japanese example because the owner of the plant had stated an intention not to use the same process in subsequent plants and because the designer of the Japanese scrubber system had failed in attempts at a Duquesne plant. EPA presented evidence of emission control at a Louisville Gas and Electric Company plant, but the court also rejected that example, characterizing the Louisville plant as a small demonstration unit (79 megawatt capacity) using a scrubbing compound "not available to the Pennsylvania power companies," and accepting the conclusion of Louisville representatives that the plant "had not demonstrated sufficient reliability for widespread commercial application." 522 F.2d at 1198. The previous finding in *Essex Chemical* that the effectiveness of sulfur oxide control technology had been demonstrated (although means for disposing of the resulting waste sludge had not) was rejected; the Union Electric and Kansas Power and Light plants used by EPA to establish the feasibility of the technology had since experienced problems contradicting the previous conclusion. 522 F.2d at 1199 n.36. As in *Portland Cement*, this court rejected the optimistic testimony of equipment vendors interested in selling pollution control systems as well as the vague statements of other witnesses that the problems were being solved.

Ultimately, the Supreme Court in *Union Electric Company v. EPA*, 96 S. Ct. 518 (1976) concluded that the Clean Air Amendments of 1970 did not permit EPA to consider economic or technological infeasibility in evaluating state implementation plans. The statute required that the national primary standards be achieved within three years regardless of the status of the technology and permitted state governments to impose more stringent controls than those neces-

sary to attain the secondary standards within a reasonable time, even if enforcement of such state requirements would result in shutting down industrial plants. Although overruled by *Union Electric*, the previous cases provided guidance for a determination about the status of a technology. The courts in *Granite City Steel* and *Duquesne Light II* both required evidence derived from previous successful performance of the candidate technology under circumstances closely approximating actual full-scale continuous commercial operation without countervailing disadvantageous side-effects.

(b) *State Implementation.*

The Illinois implementation plan directed the state's Pollution Control Board when issuing rules to "take into account . . . the technical feasibility and economic reasonableness of measuring of reducing the particular type of pollution." In *Commonwealth Edison Company v. Pollution Control Board*, 25 Ill. App. 3d 271, 323 N.E.2d 84 (1974), the court invalidated the Illinois emission standards for particulates and sulfur oxides from coal-fired power plants. Although the statute did not limit the Board to standards based on "the technology of the sulfur removal systems solely existent at the time of the adoption of its rules," the court nevertheless rejected the Board's contention that it need only show that a single plant can conform to the rules technically and economically. 323 N.E.2d at 90, 95. The Board pointed to control technologies "considerably beyond the laboratory stage," to three full-size units which had operated in England prior to World War II, to a plant in Sweden, to "existing demonstration projects" around the United States and to guarantees offered by sulfur oxide removal equipment manufacturers. The court, however, found that "operating problems had been shown to exist in some of the systems" and that the guarantees were not

unconditional. "Without any evidence that the needed systems are beyond the conceptually workable stage of development, it cannot be said that the Board's rules rest upon any evidence of statutory compliance." 323 N.E.2d at 95.

In *Commonwealth v. Pennsylvania Power Company*, 337 A.2d 823 (Pa. 1975), the court refused to find PPC officials guilty of contempt for failure to comply with the State Department of Environmental Resources standards for particuiate and sulfux [*sic*] oxide emissions, because the officials showed that compliance was impossible. PPC witnesses testified that "no desulfurization system had yet been demonstrated as workable on large coal-fired electric generating boilers, that workability was not yet predictable." 337 A.2d at 826. Department witnesses countered with evidence that such systems were already working in Japan and were being installed in several American plants. 337 A.2d at 827. The Pennsylvania Supreme Court upheld the findings of the trial and appellate courts that: "(1) serious drawbacks existed in *each* demonstration system (e.g., hard chemical deposits, low removal efficiency, soft solid build-up, severe waste, water pollution problems and continual shutdown time); (2) no available flue gas desulfurization system had been adequately demonstrated to enable compliance with the DER sulfur dioxide emission limitations; and (3) there was no way of accurately predicting which if any of these or other processes would prove acceptable in the foreseeable future." 337 A.2d at 828. The Department pointed out that PPC itself had already agreed to install Chemico scrubbers at its Shippingport plant, but the court found that evidence unpersuasive because Chemico did not guarantee that the system would meet the standards. The court characterized Shippingport and other American plants using scrubbing systems as "so experimental their ability to comply with the new regulations was only theoretical." *Id.* "Since it

was clearly shown that the predictability of the then available removal methods had not been adequately demonstrated, we doubt even the 'technology-forcing' aspects of the Federal Clean Air Act could save the instant court order." 337 A.2d at 829 n.13.

In these cases state courts have rejected as "technically infeasible" or "underestimated" pollution control technologies not yet proven to function effectively, reliably and without disadvantageous byproducts.

II. *Water Pollution Control.*

A. *New Source Standards of Performance.*

The Federal Water Pollution Control Act Amendments of 1972 directed EPA to require that new sources of water pollution comply with standards of performance reflecting "the greatest degree of effluent reduction which the Administrator determines to be achievable through application of the best available demonstrated control technology." 33 USC 1316(a)(1).

1. Corn Mills.

In *CPC International, Inc. v. Train*, 515 F.2d 1032 (8th Cir. 1975) (*CPC I*), the court rejected EPA's proposed standard for new corn wet milling plants because the necessary technology—deep bed filtration—had not been demonstrated within the corn milling industry, nor had EPA shown that results achieved by deep bed filtration in other applications were accurate indicators of the results to be expected for corn mills. 515 F.2d at 1047. The court required that there be "one operating facility which demonstrates that the level can be achieved or that there is sufficient information and data from a relevant pilot plant or semi-works plant to provide the needed economic and technical justification for such a new source." 515 F.2d at 1047 n.32, quoting the

House Report from *A Legislative History of the Water Pollution Control Act Amendments of 1972*, at 798. The Clinton corn plant incorporating the recommended technology had not yet yielded test results; even EPA concluded that the technology could not be considered "demonstrated." 515 F.2d at 1047 n.31. EPA's assertion that deep bed filtration could be applied to corn milling was not supported by evidence, only by speculation that it would enable plants to meet the proposed standards. 515 F.2d at 1049.

In *CPC International, Inc. v. Train*, 540 F.2d 1329 (1976) (*CPC II*), the court examined revised EPA standards for new corn mills, lamenting "the lack of any existing plant within the industry that includes all of the proposed in-plant controls and suggested treatment facilities" and noting that "[t]he need to be able to rely on an exemplary existing plant or to create a pilot system to demonstrate the efficacy and availability of the proposed technology is recognized by the EPA." 540 F.2d at 1332 n.4. The EPA standard governing five-day biochemical oxygen demand (BOD5) was upheld on the basis of data from 11 months of operation at the Clinton corn plant that utilized much of EPA's recommended control technology and performed generally within EPA's proposed BOD5 standard. Clinton was definitely a commercial-scale demonstration; its capacity was four times larger than that of the EPA projected model plant used to estimate pollution control capabilities. The court struck down the EPA standard governing emission of total suspended solids (TSS) as arbitrary and capricious, however, because EPA produced insufficient operational data to support a conclusion that the technology had been demonstrated. The Clinton plant did not meet the proposed TSS standard, nor did other corn wet milling plants. EPA pointed to the use of deep bed filtration technology in other industries, but the court concluded that these results did not

show that deep bed filtration would remove suspended solids with the necessary efficiency or consistency to meet the proposed TSS standard for the corn plants. EPA presented testimony from an acknowledged authority on wastewater filtration that he "would expect" new corn mills to be able to meet the proposed standard, but the court found his testimony "insufficient grounds to support this standard, particularly in light of the inability of any existing plant or pilot project to demonstrate the efficacy of this technology to consistently meet the proposed standard." 540 F.2d at 1338. Thus, a given technology was deemed "not demonstrated" in the absence of evidence from actual operating systems sufficient to show that the technology could achieve the requisite degree of effluent control.

(b) Other Plants.

In *American Iron and Steel Institute v. EPA*, 526 F.2d 1027 (3d Cir. 1975), the court remanded several of EPA's proposed standards of performance for new plants in the steel industry. The 100 gallon per ton flow rate for by-product coke plants was deemed "not demonstrated" because none of the sampled plants had achieved it. 526 F.2d at 1062. The 50 gallons per ton flow rate for sintering, blast furnace, basic oxygen furnace and continuous casting operations had not been achieved by the only plant upon which full data had been obtained, and EPA had not indicated how plugging, scaling and corrosion problems could be avoided in the absence of off gas systems atypical of basic oxygen furnaces. 546 F.2d at 1062-63. The court did uphold EPA's reliance on alkaline chlorination technology for by-product coke plants because it had been used in other industries and had been demonstrated on blast furnace effluent. Carbon adsorption technology was acceptable because it had been "applied on a large-scale basis in the petroleum industry

for years." 526 F.2d at 1064. The standard for suspended solids from continuous casting operations was upheld on the basis of a plant which had clearly achieved the limitations; for basic oxygen furnace operations, on two plants which had achieved (92 percent of standard) or had nearly achieved (104 percent of standard) the requirement. But the court rejected the suspended solids standard for vacuum degassing operations; none of the plants surveyed had achieved the limitation, nor had open hearth plants. The flouride limitation for basic oxygen furnace operations was upheld because treatment technology had been successfully used on a full-scale basis in other industries. 526 F.2d at 1065. In each instance, the court required EPA to produce evidence that the recommended technology had actually been demonstrated to work in similar applications.

In *FMC Corporation v. Train*, 539 F.2d 973 (4th Cir. 1976), the court remanded standards for wastewater flow from plants producing plastic and synthetic materials, because EPA had not identified the plants where the standard had been achieved or the technologies which had been used by those plants. The chemical oxygen demand (COD) standard was rejected on grounds that EPA had not specified treatment procedures which could achieve the required level of control. The TSS limits were remanded because EPA had not shown that mixed media filtration technology used for treating wastes from municipalities and from the petroleum industry could be transferred to manufacturers of plastics and synthetic materials.

In *Tanners' Council, Inc. v. Train*, 540 F.2d 1188 (4th Cir. 1976), the court found the recommended technology for control of BOD and TSS from tanneries inadequately demonstrated. Defining "demonstrated" as "technology presently in use," 540 F.2d at 1195, the court noted that two plants had been able to meet the BOD limit, and two

other plants had been able to meet the TSS limit, but no plant met them both. Instead of using the standards on the demonstrated performance of tanneries, EPA had used data from meat packing plants and had arbitrarily increased the meat packing effluent limits to reflect the dissimilarity between meat packing and tannery wastes. The court found no scientific data or other demonstrative evidence to support the proposed standards. 540 F.2d at 1193. Nor had EPA made allowance in the standards for the effect of cold temperature in reducing the efficiency of effluent removal devices. EPA could point to no plant where the standards had been met throughout the year. 540 F.2d at 1194.

In *du Pont and Company v. Train,* 541 F.2d 1018 (4th Cir. 1976), the court remanded nine new source standards for inorganic chemical plants because of EPA's failure to consider the effect of "catastrophic rainfall" on the achievability of the requirements. The hydrochloric acid standard was not supported by the experience of the Hooker Chemical plant relied upon by EPA, because that plant had been able to achieve the standard only during normal operation, not during start-up. 541 F.2d at 1034. For the nitric acid standard, the court did not permit extrapolation from the experience of sulfuric acid plants. 541 F.2d at 1035. The technologies for control of sodium carbonate were rejected as "neither available nor demonstrated when regard is had for nonwater environmental impact" of deep well injection and the Trona ore process. 541 F.2d at 1035-36. The court remanded the sodium dichromate standard because the evaporative technology was neither sufficiently disclosed by EPA nor demonstrated at a sufficient volume. 541 F.2d at 1036. The sodium silicate requirement was rejected because EPA had not furnished the data on its exemplary plant. 541 F.2d 1037. EPA admitted that the sulfuric acid standard could not be met by all plants at all times; the standard was

remanded. The titanium dioxide limits were rejected because EPA had "not shown [the technology] to be in use at any plant, either existing or pilot." 541 F.2d at 1039.

In *Hooker Chemicals and Plastics Corporation v. Train*, 537 F.2d 639 (2d Cir. 1976) (*Hooker II*), the court rejected EPA's proposed new source standards of performance for phosphorus and phosphorus pentasulfide plants, based on reasons presented in *Hooker I*, 537 F.2d 620 (2d Cir. 1976), applicable to the court's remand of EPA's proposed 1983 standards. *Hooker I* found the proposed 1983 wastewater limitation technology for phosphorus plants, recycling through settling ponds, impractical in colder areas were the ponds could freeze. 537 F.2d at 633-34. EPA's standard for wastewater from phosphorus pentasulfide plants was rejected for lack of documentation that the proposed technologies would work. Neither of the methods was then in use, and the court found EPA's references to literature insufficient. 537 F.2d at 635-37.

In *American Frozen Food Institute v. Train*, 539 F.2d 107 (D.C. Cir. 1976), the court upheld the new source standards for food processing plants, except the limitation on fecal coli promulgated in violation of the statutory notice and comment period requirements. The BOD limits were based on the best annual average performance of three selected commercial plants; the TSS limits, on the average annual average performance of two operating plants. 539 F.2d at 141. The court cited the Senate Report's definition of best available technology as "the degree of effluent control that has been or can be achieved through the application of technology which is available or normally can be made available. This does not mean that the technology must be in actual routine use somewhere. It does mean that the technology must be available at a cost and at a time which the Administrator determines to be reasonable, and that the

technology has been adequately demonstrated if not routinely applied." 539 F.2d at 132. The validity of the new source standards for potato processors was strongly supported by the fact that 67 percent of existing plants were using land disposal or municipal treatment systems achieving emission levels below the proposed limitations. 539 F.2d at 138.

In *American Paper Institute v. Train*, 543 F.2d 328 (D.C. Cir.), cert. dismissed, 97 S. Ct. 398 (1976), the court upheld the proposed new source standards for paper mills. The manufacturers challenged EPA's assumptions about raw waste loads, but EPA had used actual data from operating mills. 543 F.2d at 345. EPA's reliance on mixed media filtration for control of TSS was supported by industry bulletins describing studies at three mills showing greater removal of TSS than required by the standard. 543 F.2d at 346. EPA's color limitations were validated by results from two full-scale demonstration projects. 543 F.2d at 351. Because the mill using reverse osmosis for color removal was atypical, EPA conceded that reverse osmosis had not been fully demonstrated and did not include that technology in the new source standards. 543 F.2d at 353.

In *American Petroleum Institute v. EPA*, 540 F.2d 1023 (10th Cir. 1976), the court upheld new source standards for oil refineries, noting that 12 refineries were already complying with the underlying 1977 standards and that no evidence had been produced to indicate that the additional restriction on wastewater flow rate for new plants was unattainable.

In *National Renderers Association v. EPA*, 51 F.2d 1281 (8th Cir. 1976), the court found that the new source standards required only technology already meeting the 1977 standards at two plants and ammonia stripping equipment presently available. One large plant had already met the

stricter 1983 standards, and the court directed EPA to explain why it had not also required new plants to achieve that obviously achievable level of control. 541 F.2d at 1289-90. The court remanded the standards to EPA, however, for update of the analysis of the cost of achieving the standards. 541 F.2d at 1287-89.

In *Appalachian Power Company v. Train*, 545 F.2d 1351 (4th Cir. 1976), the court remanded the requirement of seawater cooling towers for new thermal power plants at coastal sites, directing EPA's attention on remand to the B.L. England Station, "the only power station presently in existence which approaches the required technology." 545 F.2d at 1371. The court also set aside EPA's requirement of control over construction site and ash pile runoff, concluding that EPA had inadequately analyzed the cost of control and had presented no data on control techniques; data on coal pile runoff was not necessarily relevant. 545 F.2d at 1374-75. Although EPA pointed to nine plants using the required dry fly ash transport systems, the court rejected two of the references because they were illegible handwritten notes, three others for lack of sufficient detail on the application of the technology, another because the plant was uniquely situated to haul its ash back into an adjoining coal mine, and three others because the documentation consisted of environmental impact statements, which "cannot support EPA's contention that dry fly ash systems are a 'demonstrated' form of technology." 545 F.2d at 76. "In all events, we do not believe that an environmental impact statement may be substituted for compliance with effluent limitations." 545 F.2d at 76 n.78. Finally, the court also found EPA's economic analysis of dry fly ash transport technology inadequate.

B. Standards for Existing Sources.

(1) 1977 Technology.

The Federal Water Pollution Control Act Amendments of 1972 direct EPA to require that existing sources of water pollution comply by 1977 with standards "which shall require the application of the best practicable control technology currently available as defined by the Administrator." 33 USC 1311(b)(1)(A). In defining this technology, the statute requires EPA to consider its total cost in relation to the effluent reduction benefits, the age of equipment and facilities, the process employed, the engineering aspects of various control techniques, process changes, nonwater quality environmental impacts (including energy requirements) and other factors deemed appropriate by the Administrator. 33 USC 1314(b)(1)(B).

In *American Iron and Steel Institute v. EPA*, 526 F.2d 1027 (3d Cir. 1975), the court upheld EPA's 1977 standards for by-product coke operations because two plants surveyed had attained the challenged flow rate limitation; two others, the ammonia discharge standard. EPA avoided the invalidation of its standards for sintering operations by suggesting that plants unable to comply could obtain variances. 526 F.2d at 1060-61.

In *American Meat Institute v. EPA*, 526 F.2d 442 (7th Cir. 1975), the court concluded that only a three-lagoon system was "practicable" because EPA had not "cost-justified" any other technologies. 526 F.2d at 454. The court accepted Senator Muskie's definition of "best practicable technology" as the average performance of the best existing plants or the performance achievable with use of technology which can be transferred from other applications. 526 F.2d at 453. EPA's limitations based on use of anaerobic lagoons was upheld, since plants in Iowa and

elsewhere had demonstrated that cold weather did not materially decrease the system's performance. 526 F.2d at 454-55. EPA was unable to support the effectiveness of aerobic lagoons in cold weather, but the standards were upheld because plants in Iowa had been able to meet the proposed five-day biological oxygen demand (BOD5) standards throughout the winter. 526 F.2d at 455. The argument of the meat packers that hot weather reduced the effectiveness of aerobic lagoons was refuted by data from operating plants in Illinois, Iowa and Ohio that met the TSS standards during the summer and from at least two plants that complied with the BOD5 standards during hot weather. 526 F.2d at 456. For simple slaughterhouses, the court accepted EPA's standard for BOD5 based on the average performance of four existing plants and for TSS based on discharge levels at three existing plants. Two additional plants had achieved the TSS standard, but EPA did not rely on that evidence because the operations were "very unusual." 526 F.2d at 457-58. For complex slaughterhouses, the BOD5 standard was upheld; the court concluded that two plants could easily meet the standard by adding an aeration step previously demonstrated at an Iowa plant. Two other plants had been meeting the standard most of the time. The court rejected the proposed standard for TSS, however, even though one plant had admittedly met the standard during two or three days of testing, exceeding it by only four percent on the third day. The court did not permit EPA to rely upon this single example, nor was the standard adequately supported by results at simple slaughterhouses with average raw waste loads 19 to 50 percent below the waste loads of the complex plants. 526 F.2d at 458-59. For low-processing packinghouses, the court approved a BOD5 standard based on emission levels achieved at four plants and a TSS standard supported by tests of anerobic lagoons at two operating

plants and tests of the remainder of the selected system at a third plant, Routh. Although the Routh plant was considered atypical, the court found persuasive its ability to limit emissions to half of those permitted by the standard while using an admittedly *less* efficient control technology than that suggested by EPA. 526 F.2d at 460-61. Finally, for the high-processing packinghouses, the court sanctioned a 98.5 percent reduction requirement on the basis of average industry performance with the recommended system of 98.3 percent, with the best plant achieving 99.5 percent reduction. 526 F.2d at 462.

In *Grain Processing Corporation v. Train*, 407 F. Supp. 96 (S.D. Iowa 1976), the court rejected EPA's proposed 1977 standards for corn wet mills because of insufficient evidence supporting EPA's assertion that the necessary technology could be transferred from municipal waste treatment facilities to corn plants. 407 F. Supp. at 105-06.

In *FMC Corporation v. Train*, 539 F.2d 973 (4th Cir. 1976), the court remanded the 1977 standard for wastewater flow from plastic and synthetic material manufacturing plants because the actual data on existing plants showed wide variations in the amount of flow. 539 F.2d at 980. The COD limits were rejected for lack of a specified treatment procedure, but the TSS restriction was upheld on the basis of data from 19 exemplary plants. 539 F.2d at 983-84.

In *Tanners' Council, Inc. v. Train*, 540 F.2d 1188 (4th Cir. 1976), the court rejected the 1977 standards, which had been based on performance data from the meat packing industry, not on the previous experience of tanneries.

In *duPont and Company v. Train*, 541 F.2d 1018 (4th Cir. 1976), the court remanded eight 1977 standards proposed for inorganic chemical plants. The performance of the Hooker Chemical plant did not support EPA's proposed

zero discharge standard; it could meet the requirement only during normal operations, not during start-up. 541 F.2d at 1034. The court ruled irrelevant the ability of sulfur acid plants to achieve the nitric acid standard proposed for the inorganic chemical plants. EPA provided no evidence that control of sodium carbonate emissions through neutralization of effluent was practicable. 541 F.2d at 1035. The sodium metal standard was rejected because EPA had not demonstrated the application of settling basins; the exemplary plant did not achieve the requirement. Nor did EPA provide data on its exemplary plant for control of sodium silicate. 541 F.2d at 1037. The sulfuric acid standard was rejected after EPA admitted that the technology was not practicable for all plants at all times. 541 F.2d at 1038. And the court rejected titanium dioxide limits based on technology "not shown to be in use at any plant, either existing or pilot." 541 F.2d at 1039.

In *Hooker Chemicals and Plastics Corporation v. Train*, 537 F.2d 620 (2d Cir. 1976) (*Hooker I*), the court remanded the 1977 standard for wastewater from phosphorus plants because EPA had failed to consider the effect of excess rainfall. 537 F.2d at 633. The phosphorus pentasulfide plant standard was rejected because EPA had not shown that the zero discharge limitation was attainable by any known technology. 537 F.2d at 637. The data base for EPA's proposed standard for food grade sodium tripolyphosphate producers was considered insufficient. 537 F.2d at 638.

In *American Frozen Food Institute v. Train*, 539 F.2d 107 (D.C. Cir. 1976), the court upheld the 1977 standards for food processing plants based on data from several commercial plants already operating in the United States and Canada. The BOD limitation for frozen food plants was derived from the worst annual average performance of three exemplary plants; for dehydrated food plants, from the av-

erage annual average performance of the three plants. The TSS standard was based on the worst annual average performance of two exemplary plants. 539 F.2d at 141. The court cited a definition of currently available technology offered on the House Floor: "control technology, which, by demonstration projects, pilot plants, or general use, has demonstrated a reasonable level of engineering and economic confidence in the viability of the process at the time of commencement of actual construction of the control facilities." 539 F.2d at 121. In other words, a technology is not currently available unless it could be confidently employed in projects ready for construction.

In *American Paper Institute v. Train*, 543 F.2d 328 (D.C. Cir. 1976) cert. dismissed 97 S. Ct. 398 (1976), the court validated EPA regulations requiring in-plant process changes that had been in common use by some paper manufacturers. 543 F.2d at 341. EPA had chosen to omit from consideration the operating paper mill with the best final effluent quality because its technology was "atypical." 543 F.2d at 344. Other plants were not considered because they had large adjacent land areas for effluent filtration, an option not available at all mill sites. 543 F.2d at 345. EPA concluded that neither the atypical technology nor land filtration was "the best practical control technology *currently available*."

In *American Petroleum Institute v. EPA*, 545 F.2d 1023 (10th Cir. 1976), the court upheld 1977 standards already achieved by 12 operating refineries. 540 F.2d at 1034.

In *Appalachian Power Company v. Train*, 545 F.2d 1351 (4th Cir. 1976), the court remanded EPA's ban on use of cooling lakes for thermal powerplants for evaluation of their total environmental impact, including use of water in arid regions. 545 F.2d at 1370.

In *C and H Sugar Company v. EPA*, 553 F.2d 280 (2d Cir. 1977), the court found adequate support for EPA's 1977 standards based on activated sludge treatment of cane sugar refining wastes. The treatment was widely practiced in other industries with similar raw waste characteristics (beet sugar refiners, fruit and vegetable processors, dairies) and had been proven in bench and pilot scale tests and in foreign cane sugar refineries. 553 F.2d at 285-88.

(2) *1983 Technology.*

The 1972 Amendments direct EPA to require the existing sources of water pollution comply by 1983 with standards "which shall require application of the best available technology economically achievable . . . as determined . . . by the Administrator." 33 USC 1311(b)(2)(A). In defining this technology, the statute requires EPA to consider the age of equipment and facilities, the process employed, the engineering aspects of various control techniques, process changes, cost and nonwater quality environmental impacts (including energy requirements) and other factors deemed appropriate by the Administrator. 33 USC 1314(b)(2)(B).

In *American Iron and Steel Institute v. EPA*, 526 F.2d 1027 (3d Cir. 1975), the court declined to rule on the availability of technology not required to be implemented for over seven years but noted that EPA could rely on pilot plant technology for establishing the 1983 standards for steel plants. 526 F.2d at 1061.

In *American Meat Institute v. EPA*, 526 F.2d 442 (7th Cir. 1975), the court upheld EPA's 1983 standards for TSS and BOD5 effluents (except the TSS standard for complex slaughterhouses) because the technology had been demonstrated to be feasible, although the opinion mentioned no specific tests of the system. 526 F.2d at 464. The ammonia standard was rejected, however, because the technology was

plagued by problems of scaling and loss of efficiency at low temperatures. Although the ammonia stripping technology had been in common use in the petroleum refining industry, the court concluded that its application to slaughterhouses had not been shown feasible. 526 F.2d at 465.

In *Grain Processing Corporation v. Train*, 407 F. Supp. 96 (S.D. Iowa 1976), the court rejected the standards for corn wet mills because "EPA had not demonstrated that the technology upon which the regulations are predicated has been shown to be available." 407 F. Supp. at 106. This finding was based on the conclusion of the 8th Circuit Court of Appeals in *CPC I* that the technology required to achieve the standard of performance for new corn wet mills had not been demonstrated.

In *FMC Corporation v. Train*, 539 F.2d 973 (4th Cir. 1976), the court remanded the wastewater flow standard for manufacturers of plastics and synthetic materials because no evidence had been presented that water conservation methods could meet the standard by 1983. 539 F.2d at 981. The court deferred judgment on the COD limit until data from further research and testing could be accumulated. 539 F.2d at 984. Similarly, the TSS standard was neither approved nor rejected; the court suggested that the matter could be adjudicated again after tests of the proposed mixed media filtration systems. 539 F.2d at 985.

In *Tanner's Council, Inc. v. Train*, 540 F.2d 1188 (4th Cir. 1976), the court permitted EPA to establish 1983 standards based on "technologies that have not been applied as long as the record demonstrates that there is a reasonable basis to believe that the technology will be available by 1983." 540 F.2d at 1195.

In *duPont and Company v. Train*, 541 F.2d 1018 (4th Cir. 1976), the court remanded 11 of EPA's proposed 1983

standards for inorganic chemical plants. EPA's exemplary plant for hydrogen peroxide effluent control could not overcome the problem of catastrophic rainfall. 541 F.2d at 1034. The sodium dichromate standard was rejected because EPA had not identified what evaporative technology it had analyzed. 541 F.2d at 1036. The other standards were remanded for reasons explained in the discussion of new source standards of performance and the 1977 technology.

In *Hooker I*, 537 F.2d 620 (2d Cir. 1976) the court rejected EPA's 1983 standards for phosphorous [*sic*] plants because the recommended technology (settling ponds and wastewater recycle) was not necessarily feasible in cold weather areas. 537 F.2d at 633-34. The phosphorous [*sic*] trichloride and oxychloride standards were remanded for consideration of the proposed refrigeration and evaporation technology and its disadvantages of cost, energy use and solid waste production. 537 F.2d at 638.

In *American Frozen Food Institute v. Train*, 539 F.2d 107 (D.C. Cir. 1976), the court upheld the 1983 standards for food processing plants which required the same technology as the new source standards discussed earlier. The court authorized EPA to consider "capabilities which exist in operation or which can be applied as a result of public and private research efforts." 539 F.2d at 119.

In *American Paper Institute v. Train*, 543 F.2d 328 (D.C. Cir. 1976), the court upheld the 1983 standards for paper mills which required the same technology as the new source standards previously discussed, plus reverse osmosis for control of color. The court found adequate evidence to support EPA's conclusion that reverse osmosis technology would be available by 1983. Although not demonstrated at full scale, pilot studies indicated that the necessary color reduction "should be achievable." 543 F.2d at 353.

In *American Petroleum Institute v. EPA*, 540 F.2d 1023 (10th Cir. 1976), the court rejected the proposed 1983 implementation of carbon adsorption technology. EPA conceded that it needed "further development before it will show the high degree of effectiveness in large-scale operation that it has already shown in pilot plant demonstrations." 540 F.2d at 1038. The court warned that "[t]he failure of the BP plant to achieve the limitations when placed in full-scale operation may not be ignored." *Id.*

In *Appalachian Power Company v. EPA*, 545 F.2d 1351 (4th Cir. 1976), the court remanded the thermal effluent backfit control requirement to EPA for discussion of its benefits and economic feasibility. EPA was also directed at least to consider NRC's proposal for no backfit requirement for licensed nuclear power plants, although the court emphasized that EPA need not abdicate to NRC in this decision. 545 F.2d at 387.

In *C and H Sugar Company v. EPA*, 553 F.2d 280 (10th Cir. 1977), the court decided that present use of the suggested sand filtration technology by industries with similar wastes supported EPA's determination that such systems could be used by 1983 in cane sugar refineries. 553 F.2d at 288.

III. *Occupational Safety and Health Regulation.*

The Occupational Safety and Health Act of 1970 directed the Occupational Safety and Health Administration (OSHA) to promulgate standards for toxic materials or harmful physical agents "which most adequately assure[], to the extent feasible, on the basis of the best available evidence, that no employee will suffer material impairment of health or functional capacity even if such employee has regular exposure to the hazard . . . for the period of his working life. Development of standards under this subsection shall be

based upon research. demonstrations, experiments, and such other information as may be appropriate. . . . [O]ther considerations shall be the latest available scientific data in the field, the feasibility of the standards, and experience gained under this and other health and safety laws." 29 USC 655(b)(5).

In *Industrial Union Department, AFL-CIO v. Hodgson*, 499 F.2d 467 (D.C. Cir. 1974), the court refused to invalidate the decision of OSHA to delay for four years the implementation of a stricter standard for worker exposure to asbestos dust. OSHA could properly consider the economic feasibility of its standards; the statute did not intend "to require immediate implementation of all protective measures technologically achievable without regard for their economic impact. To the contrary, it would comport with common usage to say that a standard that is prohibitively expensive is not 'feasible.' " 499 F.2d at 477. Nor was the statute intended to put employers out of business, "either by requiring protective devices unavailable under existing technology or by making financial viability generally impossible." 499 F.2d at 478.

In *Society of Plastics Industry, Inc. v. OSHA*, 509 F.2d 1301 (2d Cir. 1975), the court upheld an OSHA standard limiting exposure to vinyl chloride monomer (VCM), although no manufacturer had yet achieved such a low exposure level. The court stated that OSHA could impose standards "which require improvements in existing technologies or which require the development of new technology." 509 F.2d at 1309. The arguments of the manufacturers were found not credible. "[D]espite similar predictions of impossibility regarding the emergency 50 ppm standard, vast improvements were made in a matter of weeks, and a variety of useful engineering and work practice controls have yet to be instituted." *Id.* Neverthe-

less, the court was eager to show that the technology for compliance with the new standard was available, noting that engineering and work practice controls could be supplemented by use of respiratory devices which "effectively eliminate exposure to VCM . . . and are already being used by some PVC companies . . . with good success. . . . Furthermore, lightweight, inexpensive cartridge or canister-type respirators, which can effectively filter out VCM at low levels, are now available and acceptable." 509 F.2d at 1310. Finally, the court indicated that, if the manufacturers were truly unable to comply with the standard, OSHA could amend it. *Id.*

In *AFL-CIO v. Brennan*, 530 F.2d 109 (3d Cir. 1975), the court remanded OSHA's revocation of its "no hands in dies" standard for mechanical power presses. OSHA argued that the standard could not be universally attained because "automated feeding is at the present level of technology incompatible with as much as 47 percent of all power press operations." 530 F.2d at 120. Although this regulation did not involve a toxic material or harmful physical agent under 29 USC 655(b)(5), the court concluded that OSHA could consider technological feasibility under the language of 29 USC 655(a), which requires promulgation of standards to assure "the greatest protection of the safety or health of the affected employees." The question of technological feasibility could not be dominant, however. The court characterized the Act as "technology-forcing"; OSHA "would not be justified in dismissing an alternative . . . as infeasible when the necessary technology looms on today's horizon." 530 F.2d at 121. In this instance, OSHA reasonably found that compliance with the standard was not technologically feasible in the near future, a finding which "necessarily implies consideration both of existing technological capabilities and imminent advances in the art." 530 F.2d at 122.

OSHA cold [*sic*] also reasonably consider the economic consequences of the standard. The court would not uphold an "economically impossible standard" causing employers to go out of business. 530 F.2d at 123. The court remanded OSHA's revocation of the standard, however, because the agency had not shown that the standard could not be practicable in combination with a requirement for machinery hand guard devices, nor that it would be impossible to implement the standard in the 53 percent of mechanical power press applications where it would be technologically and economically feasible. 530 F.2d at 123-24.

In *Synthetic Organic Chemical Manufacturers Association v. Brennan*, 506 F.2d 385 (3d Cir. 1974), the court refused to require OSHA to establish a standard permitting zero exposure to 14 chemicals found to be carcinogenic in animals, a standard requested by the Oil, Chemical and Atomic Workers International Union and the Health Research Group. The court concluded that OSHA's standard permitting some occupational exposure to those chemicals was designed "to reduce exposure of workers to the maximum extent practicable with continued use" of the chemicals. 506 F.2d at 390. OSHA's standards were remanded for other reasons.

IV. Automobile Safety Regulation.

The National Traffic and Motor Vehicle Safety Act of 1966 authorized the National Highway Traffic Safety Administration (NHTSA) to require new cars to comply with performance standards which "shall be practicable, shall meet the need for motor vehicle safety, and shall be stated in objective terms." 15 USC 1392(a). In H and H Tire Company v. DOT, 471 F.2d 350 (7th Cir. 1972), the court rejected the NHTSA performance standards for retreaded tires. The tire industry tests showed a 28 percent

failure rate for the endurance requirement and a 17 percent failure rate on the high speed test. 471 F.2d at 354. Although some tire retreaders admitted they might be able to improve their products, the court found the standard technologically and economically infeasible, because the resulting increased price of retreads could persuade drivers to delay in replacing worn out tires, thus impeding the purpose of the statute to enhance highway safety.

In *Chrysler Corporation v. DOT*, 472 F.2d 659 (6th Cir. 1972), the court remanded NHTSA's requirement that new cars be equipped with passive restraint devices (air bags), concluding that the standard was not stated in objective terms because inconsistent characteristics of anthropomorphic test dummies could result in nonobjective findings about the effectiveness of each auto manufacturer's passive restraint system. The court rejected, however, the automakers' contention that NHTSA could not issue standards requiring any but existing technologies. "We do not intend the suggest that the Agency might impose standards so demanding as to require a manufacturer to perform the impossible, or impose standards so imperative as to put a manufacturer out of business . . . ." 472 F.2d 672. Nevertheless, "the Agency is empowered to issue safety standards which require improvements in existing technology or which require the development of new technology." 472 F.2d at 673.

V. *The Patent System.*

Patent statutes from 1790 to the present have implemented Article 1, Section 8, Clause 8 of the U. S. Constitution, which grants Congress the power "To promote the Progress of Science and useful Arts, by securing for limited Times to Authors and Inventors the exclusive Right to their respective Writings and Discoveries." The statute presently

in force, the 1952 revision, affords patent protection for "any new and useful process, machine, manufacture, or composition of matter, or any new and useful improvement thereof." 35 USC 101. To qualify for a patent, an invention must possess three qualities: nonobviousness, utility and novelty. 35 USC 101-103. The nonobviousness requirement protects society from monopolies on common sense and simple practicality. The utility criterion ensures that society receives a benefit in return for the grant of any monopoly. The novelty standard is designed to ensure that the monopoly is allocated to the actual, deserving inventor. The latter two requirements are relevant to a discussion of the status of technologies.

(A) Utility and Operability.

"Utility is absent from all inventions which cannot be used to perform their specific functions . . . ." A. Deller, *1 Walker on Patents* Section 95, at 529 (2d ed. 1964). Courts have frequently invalidated patents or have upheld the denial of patents by the Patent Office if the alleged invention has not successfully performed its claimed function. For example, in *McKenzie v. Cummings*, 24 App. D.C. 137 (D.C. Cir. 1904), the court rejected the patentability of a voting machine which failed to register one percent of the votes cast. A similar ruling was issued regarding a calculating machine that depended for accuracy upon the user's application of rules of correction at irregular intervals. *Carlin v. Crumpton*, 45 App. D.C. 166 (D.C. Cir. 1916). In *Brenner v. Manson*, 383 US 519 (1966), the Supreme Court denied the patentability of process producing a steroid with no known usefulness. The adjacent homologue of the steroid had exhibited tumor-inhibiting effects in mice, but the steroid itself had not been demonstrated on mice, let alone humans. "[A] patent is not a hunting license.

It is not a reward for the search, but compensation for its successful conclusion." 383 US at 536. The same rule applies to other patentable subject matter. "[W]here the device is of a new type, there is need for demonstration of utility under conditions of practical operation." *1 Walker on Patents* Section 92, at 525.

APPENDIX B: APPROVAL BY AUTHORIZED AGENCIES OF THE UNITED STATES

California Public Resources Code Section 25524.1 conditions nuclear power plant certification upon an Energy Commission finding "that the United States through its authorized agency has identified and approved . . . nuclear fuel rod reprocessing plants." Cal. Pub. Res. Code § 25524.1(a).[1] Section 25524.2 conditions certification of nuclear power plants upon finding "that the United States through its authorized agency has approved . . . a demonstrated technology or means for the disposal of high-level nuclear waste." Cal. Pub. Res. Code § 25524.2(a).

The Energy Commission has concluded that NRC is the "authorized agency" and that licensing of facilities is the "approval" action required by the statutes. Below is a discussion of the bases for these conclusions as well as a discussion of the status of approval.

The statutes establish two distinct tasks for the Energy Commission, to determine which agency of the United States is authorized to approve each subject plant or technology and what action by that agency constitutes its approval of the operation. Although NRC is explicitly assigned the role of "approving" the construction and operation of reprocessing plants through licensing (42 U.S.C. 2131-

---

[1]This is the grammatically correct interpretation of the language of the statute according to its punctuation, which sets off by commas the clause pertaining to "technology for the construction and operation of" reprocessing plants. The ordinary rules of grammar should apply to interpretation of the statutes, as long as the result is not absurd. See 45 *Cal. Jur. 2d* Statutes § 155 (1967). The conclusion that § 25524.1(a)(1) refers to approval of reprocessing plants, not approval of reprocessing technology, appears eminently reasonable, particularly in light of testimony received by the Energy Commission that federal agencies approve or disapprove nuclear facilities, not nuclear technologies. See note 2 and accompanying text.

2140), no agency of the United States is explicitly assigned to "approve" waste disposal technology.

Because no agency of the United States is explicitly assigned the role of declaring its "approval" of the waste disposal technology, selection of the proper agency depends upon how closely its function resembles "approval."[2]

After identifying the authorized agency for approval, the Energy Commission must determine whether that agency has in fact issued its approval.

B.1 *The Authorized Agencies*

B.1.1 *Criteria for the Selection*

An agency is positioned to issue approval of a facility if that agency's sanction is legally required before the plant may operate to achieve its purpose. Similarly, an agency performs an approval function for a technology if the practical application of the technology requires agency sanction. Operability of a plant or implementation of a technology may depend upon agency licensing, agency funding or compliance with agency regulations.

If the agency does not provide the necessary license for funding or if it promulgates regulations discouraging use of the technology, these actions may constitute disapproval of the technology. Conversely, a facility or technology is

---

[2]When asked "at what point in the present regulatory process would you consider that NRC will be able to approve the demonstrated technology and means for disposal of high-level wastes," NRC Commissioner Victor Gilinski testified, "Our approval is not phrased in those terms. I mean, we approve facilities." Tr., 31 January 1977, at 42. Commissioner Gilinski also indicated, however, that NRC issues findings applicable to more than a single facility. *Id.* at 42-43. Moreover, the Energy Reorganization Act of 1974 assigns to the NRC Office of Nuclear Reactor Regulation the function of "*evaluating methods* of . . . transporting and storing high-level radioactive wastes to prevent radiation hazards to employees and the general public." 42 U.S.C. 5843(b)(2)(B). (Emphasis added.)

approved if it receives necessary licenses, if government regulation permits its operation and if the necessary funding for its success is provided, although financing may be provided exclusively by commercial enterprises.

The statutes condition certification of nuclear power plants upon approval of plant or technology by the authorized agency of the United States. Although government agencies occasionally assert jurisdiction over a subject matter only later to find that they lack the authority to regulate, the important question is whether the asserting agency has been authorized by legislation to perform its assumed function, not whether the agency merely aspires to control. And, although many agencies may perform a legislatively authorized approval function over a particular operation, the California statutes require the Energy Commission to determine whether approval of reprocessing plants and high-level nuclear waste disposal technology has been issued by *the* authorized *agency*, not whether approval has been issued by one or a few of many agencies authorized to perform an approval function.[3]

Directed to select a single agency for approval of reprocessing plants and a single agency for waste disposal technology (not necessarily the same agency for both), the Energy Commission must choose the agency with explicit approval authority or the agency whose functions most closely resemble approval thereby providing a high degree of assurance that the technology will be available.

---

[3]The California Electric Utilities stated that the Energy Commission "must find that the specified technology has been meaningfully found acceptable by *a* responsible Federal agency" and that "NRC is not the sole Federal agency with significant responsibilities relevant to fuel reprocessing or waste disposal technology." California Electric Utilities, *Federal "Approvals" of Technology under AB 2820 and AB 2822*, 24 May 1977, at I-13 (emphasis added). Although the latter statement is accurate, the former is clearly a misinterpretation of the statutes.

In sum, the criteria for selecting the authorized agency for each operation are: (1) agency sanction legally required for operation of each plant or technology; (2) agency approval function legislatively authorized; and (3) for reprocessing plants and waste disposal technology, agency action explicitly approving operation or other agency action providing a high degree of assurance that the technology will become operative.

A test exists for providing an even higher degree of assurance that a technology is approved and will be allowed to operate. That is to choose the agency with the power to issue final approval for each facility or technology. Approval under such a test would be the agency sanction removing the final legal obstacle to operation. As discussed below, the Energy Commission believes that the Legislature intended "approval by the authorized agency" to mean something less than this stringent test.

B.1.2 *Evaluation of Candidate Agencies.*

The Energy Commission has considered the appropriateness of selecting any of a number of agencies at [*sic*] the "authorized agency of the United States" for the required approvals, including the Nuclear Regulatory Commission (NRC), the Department of Energy (DOE), the Nuclear Regulatory Commission (NRC), the Environmental Protection Agency (EPA), the Department of Transporation (DOT), state agencies implementing federal laws and the U.S. Constitution, courts, Congress and the President. A detailed examination of the authority and functions of these entities is presented in the final section of this appendix. The findings of the Energy Commission are presented below.

a. *Fuel Reprocessing Plants*

For fuel reprocessing plants, NRC approval in the form of environmental impact statements (both generic and for individual facilities), construction permits, operating licen-

ses and materials licenses is required by various federal statutes. See 52 U.S.C. 4331 *et seq.* (environmental impact statements required) 42 U.S.C. 2071-2078 (special nuclear materials), 2111-2112 (by-product material), 2131-2140 (production or utilization facilities), 4332(c) (environmental impact statements), 5841(f) (transfer of authority from AEC to NRC). Selection of NRC as the "authorized agency" for approving reprocessing plants would satisfy the criteria set forth above.

A fiscal year 1978 federal appropriations act allocates to DOE up to $14 million for study of the Barnwell Nuclear Fuels Plant "to determine if that facility may be utilized in support of the nonproliferation objectives of the United States," Public Law No. 95-96, August 7, 1977, but for commercial nuclear fuel reprocessing DOE is not legislatively authoized [*sic*] to issue approval, nor is DOE sanction legally required.

Recent legislation has authorized other agencies of the United States to grant or withhold legally required sanctions for fuel reprocessing plants. Therefore, even though present NRC licensing of reprocessing plants would provide a high degree of assurance that reprocessing technology would be available, that license alone would not provide absolute assurance.

The Clean Air Act Amendments of 1977 direct EPA within two years to determine whether emission of radioactive pollutants may endanger public health and to promulgate standards for control of such emissions. Public Law No. 95-95, §120(a). EPA and state agencies can enforce the standards of performance required for new stationary sources (such as fuel reprocessing plants), even those owned or operated by the federal government. 42 U.S.C. 1857c-6(c) (1); Public Law No. 95-95, § 109(d)(1). State agencies also may enforce state standards which are more stringent

than those promulgated by EPA against commercial and federal facilities. 42 U.S.C. 1857d-1; Public Law No. 95-95, § 116(a)(2). NRC may veto the application of an EPA or state standard only if NRC finds that the standard would "endanger public health or safety," and the President can override any veto attempt by NRC. Public Law No. 95-95, § 120(a). Furthermore, any NRC determination that an EPA or state standard would endanger the public would be subject to judicial review and could be set aside as arbitrary, capricious, unsupported by substantial evidence or unwarranted by the facts. 5 U.S.C. 706.

This new framework for control of radioactive emissions has yet to be fully implemented, but the Clean Air Act Amendments of 1977 have substantially altered the legal authority of various agencies of the United States over nuclear facilities, including fuel reprocessing plants. The Congressional conference committee emphasized that the amendment "makes it clear that the full regulatory framework of the Act is available for radioactive pollutants" and overrules the holding of *Northern States Power Co. v. Minnesota*, 477 F.2d 1143 (8th Cir. 1971), *aff'd mem.* 405 US 1035 (1972). *H.R. Rep. No. 564*, 95th Cong., 1st Sess. 142-43 (1977). The 1977 Amendments also weaken considerably the more general federal implied preemption doctrine based on *Northern States* that states may not regulate NRC licensed activities for protection against radiation hazards, because they recognize that state agencies are qualified to evaluate radiation hazards and to set and enforce standards for control of radioactive emissions. In addition, state agencies certainly have authority to impose land use and other restrictions on nuclear facilities, even though the regulation may be prompted by a concern for safety from radiation. *Northern Cal. Ass'n to Preserve Bodega Head & Harbor, Inc. v. Pub. Utils. Comm'n*, 61 Cal. 2d 126, 390 P.2d 200,

37 Cal Rptr. 432 (1964). In recent years several states have enacted statutes imposing various restrictions upon the siting of nuclear facilities, including fuel reprocessing plants. State agencies implementing these statutes are authorized by federal law, including the Tenth Amendment to the U.S. Constitution, to approve or disapprove fuel reprocessing plants.

Therefore, even though NRC licenses a reprocessing plant, actions by these other governmental entities may possibly prevent operation of those fuel cycle facilities. Thus, final approval may depend upon an NRC license or an EPA or state permit.

NRC is the federal agency with the most pervasive regulatory authority, however, and the Energy Commission believes that issuance of an NRC operating license provides adequate assurance of an operable and available technology. NRC is therefore, selected as the "authorized agency" for approval of reprocessing plants.

b. *Waste Disposal Technology.*

The Energy Reorganization Act of 1974 indirectly authorized ERDA, now DOE, to establish "[f]acilities used primarily for the receipt and storage of high-level radioactive wastes resulting from activities licensed under [the Atomic Energy Act of 1954, as amended]." 42 U.S.C. 5842(3). The Reorganization Act also authorizes NRC to exercise "licensing and related regulatory authority" over any such facility and to "evaluat[e] methods of . . . storing the high-level radioactive wastes to prevent radiation hazards to employees and the general public." 42 U.S.C. 5842, 5843(b)(2)(B). Thus, any high-level waste repository storing commercial waste will be required to obtain an NRC license.

Present NRC licensing regulations do not specifically cover high-level waste repositories. However, NRC has stated:

> While ERDA has the task of developing and demonstrating technologies for storage and disposal of high-level nuclear wastes, the Energy Reorganization Act of 1974 assigns NRC the responsibility to license and regulate the facilities to be employed for the safe storage and/or disposal of these wastes.
>
> The NRC is actively preparing for the licensing of these ERDA facilities. Factors being considered in the development of licensing procedures include assuring the protection of the health and safety of the public, the timely development of the facilities, and obtaining public participation to the fullest extent possible. With these factors in mind, the preparation of a licensing procedure which will provide for effective NRC regulation is well underway.
>
> The NRC licensing procedures will provide for an independent assessment of proposed ERDA waste management facilities.
>
> U.S. Nuclear Regulatory Commission, *Annual Report 1976*, p. 76.

NRC has more recently stated elsewhere that:

> ERDA has greatly expanded its program for selection of sites for geologic disposal and is expected to apply to the NRC for a license for such a facility in early 1980 or before. . . . Similarly, the NRC is expanding its own program to set the regulatory requirements for such an operation. The NRC is presently developing a set of regulations to govern licensing of federal repositories to insure that permanent disposal of high-level radioactive wastes may be accomplished safely. . . . 42 Fed. Reg. 34393, July 5, 1977.

These quotes reemphasize the division of responsibilities set forth in the Energy Reorganization Act with ERDA carrying out research and promotional objectives and NRC regulating those promotion and development activities. The past Chairman of the NRC, Marcus Rowden, in explaining the basis for this dichotomy has stated:

> Enactment of the ERA and its creation of the NRC, effective January 19, 1975, marked a watershed in nuclear regulation. It recognized that from technical, economic, and social standpoints, nuclear energy had matured to a stage where its regulation demanded the full attention of an independent agency. It represented a companion decision by the Congress that, if nuclear power was to be a viable option as an energy source, the public had to have full confidence in its regulation; and this, in turn, required that nuclear regulation be carried out by an agency having no promotional responsibilities.
>
> Testimony of Marcus A. Rowden, Chairman, U.S. Nuclear Regulatory Commission, *Hearings on Legislation Authorizing Appropriations*, House Committee on Interior and Insular Affairs, Subcommittee on Energy and the Environment, Feb. 17, 1977, p. 33.

Thus, NRC's authority under the Energy Reorganization Act to "license" and "evaluate" ERDA/DOE's waste disposal proposals indicate that NRC's regulatory, evaluative function is much more closely akin to an "approval" function than are ERDA/DOE's research and development activities. Once ERDA has developed a proposal for waste disposal it must still present the proposal in the form of an application to NRC for a license to construct and operate the facility. As is the case when any application for a license is presented to a regulatory agency, the mere submission of the application is no guarantee that the project will be approved. Further action is required in the form of an ap-

proval granting the license by the regulatory agency. Thus, NRC's function satisfies better than DOE's the third criteria established above, agency action providing a high degree of assurance that the technology will be operative.

Robert W. Fri, Deputy Administrator of ERDA, at a White House Press Conference on October 28, 1976, in describing the approval process and NRC's role as the evaluating agency, stated:

> The determination of what the final site ought to be is a matter of political and social judgement for which we happily have a process in the nuclear field. . .and that is called the Nuclear Regulatory Commission. Therefore, it will go through that licensing process completely with the environmental impact statement and the equities will have to be balanced by that Commission, and the decision made as to what the public interest calls for.
>
> *White House Press Release*, October 28, 1976, p. 8.

As previously noted, however, even the granting of a license by NRC is not absolute assurance that the facility will operate. The Clean Air Act Amendments of 1977 authorize EPA and state agencies to regulate radioactive emissions from commercial and federal facilities. Public Law No. 95-95, §§ 109(d)(1), 116(a)(2), 120(a). In addition, several states recently have enacted statutes imposing restrictions on the disposal of nuclear waste.

The Commission concludes, after reviewing the legislative authority and functions of all entities with responsibility for aspects of waste management regulation, set forth at the end of this Appendix that NRC has primary authority, and therefore, the Energy Commission selects NRC as the "authorized agency" of the United States for purposes of approving waste disposal measures. Furthermore, the Energy Commission does not believe this interpretation to be

inconsistent with prior amendment of the statutes which substituted "the authorized agency of the United States" for "NRC" and "approval" for "licensing," phrases included in an earlier version of the legislation. At the time these bills were passed in May, 1976, the Legislature was undoubtedly aware of both relatively recent and contemplated federal energy agency reorganizations.

Under the Energy Reorganization Act of 1974 (ERA), passed two years prior to the enactment of Sections 25524.1 and 2224.2, the Atomic Energy Commission was dissolved and its regulatory responsibilities were transferred to the NRC while its developmental and operational responsibilities were transferred to ERDA. 42 U.S.C. § 5801 *et seq.* In addition, Section 109 of the ERA provided for future reorganization, requiring the President to submit to Congress additional recommendations for reorganization of energy and related functions of the federal government. 42 U.S.C. § 5819. A significant reorganization of just this sort occurred in 1977 when Congress created the Department of Energy pursuant to the Department of Energy Organization Act of 1977. Public Law No. 95-95, August 4, 1977 (codified at 42 U.S.C. 7101, *et seq.*).

Very recently, another significant redistribution of nuclear-related regulatory authority was effected in the Clean Air act Amendments of 1977, which gave EPA authority to regulate radioactive emissions. Public Law 95-95, § 120(a). Legislative cognizance of the degree of federal energy agency reorganization occurring or about to occur is certainly a plausible explanation for the amendment.

Although some, including the Nuclear Industry and California Electric Utilities argue against such an explanation, they nevertheless state:

> We have no quarrel with the suggestion that one of the "authorized agencies" may be the NRC, which has

> the statutory responsibility for regulating commercial reprocessing and the disposal of high-level wastes. Obviously, one way the Commission can satisfy the requirements of either bills [sic] is to find that the NRC has "approved" the specified technology through actions in the course of establishing the pertinent regulatory framework or in reviewing specific license applications."
>
> Nuclear Industry and California Electric Utilities, *Statement of Position*, May 24, 1977, at pp. I-12,13.

The utilities' statement then goes on to suggest ERDA as the "authorized" agency for purposes of approving waste disposal technology. *Id* at I-14, 15. As discussed above, the Energy Commission has rejected ERDA/DOE as the "authorized agency" for approval purposes, and has adopted, instead, the utilities' prior suggestion that NRC is the appropriate agency.

B.2 *Status of Approvals*

B.2.1 *Criteria for determining the status*

Webster's Dictionary defines the term "approval" as:

> 1. the act of approving: Approbation, Sacntion [*sic*], 2. certification as to acceptability. Webster's Third New International Dictionary, Unabridged

The Legislature appears to be using the term "approval" in the reprocessing and waste disposal statutes to mean "official sanction" or official certification of acceptability. This is consistent with both the everyday plain meaning of the term as shown by the dictionary definition and with California case law. In *People v. Hall* 140 Cal. App. 745, 31 P2d 831 (1934) the court stated:

> The word 'approve' means to sanction officially, to ratify or confirm. *Id* at 835.

See also *Cosner v. Board of Supervisors of Colusa County* 58 Cal. 174, 177 (1881).

In a more recent case involving the California Environmental Quality Act (CEQA) the court was required to interpret the word "approval." The state CEQA guidelines require that the decision-making body or administrative official having final approval authority over a project involving a substantial effect upon the environment review and consider an Environmental Impact Report before taking action to approve or disapprove the project. The court stated:

> Here only the Glendale City Council has the power to approve the project, the zone change. "Approval" is the decision by the public agency which commits it to a definite course of action in regard to an intended project. . . .The parties agree that only the city council was empowered to commit the City of Glendale to the zone change. The city council is thus the decision-making body to which the state guidelines refer. The state guidelines require that it review and consider the EIR.
>
> *Kleist v. City of Glendale*, 56 Cal. App. 3d 770, 128 Cal Rptr. 781, 787.

The Energy Commission believes the Legislature in the nuclear statutes used the term "approval" in a similar fashion to the *Kleist, supra*, interpretation, that is, action by the agency empowered to commit itself or its superior to a particular course of action. The NRC is *the* agency (other than Congress, perhaps) authorized by the United States to "commit" the government to a particular nuclear technology or facility. It is the agency which can "officially sanction" or officially certify as acceptable a nuclear fuel cycle technology or project.

Federal approval of reprocessing and waste disposal facilities proceeds through a series of actions. Research and

development of technology is accompanied by preparation of a generic or programmatic environmental impact statement as required by the National Environmental Policy Act (NEPA). 42 U.S.C. §§ 4331 *et seq.* Under NEPA, all agencies of the federal government must "include in every recommendation or report on proposals for legislation and other major federal actions significantly affecting the quality of the environment, a detailed statement by the responsible official" on the environmental impact of the project, adverse effects which cannot be avoided, alternatives to the proposed action, the relationship between short term uses and long term productivity, and any irreversible and irretrievable commitments of resources which result from the project. *Id.* at § 4332.

It is clear from recent court cases that NEPA requires an environmental review of the development and implementation of technology just as it requires an EIS prior to licensing of specific facilities. The landmark decision first enunciating this principle is a case involving a technology research and development program, the Liquid Metal Fast Breeder Reactor Program (LMFBR) of the Atomic Energy Commission, ERDA's and NRC's predecessor. In this case, *Scientists' Institute for Public Information, Inc. v. Atomic Energy Commission*, 481 F.2d 1079 (1973), the Court stated,

> "We thus tread firm ground in holding that NEPA requires impact statements for major federal research programs, such as the Commission's LMFBR program aimed at the development of new technologies which, when applied, will significantly affect the quality of the human environment." *Id.* at 1091.

In discussing the timing of the NEPA statement during the technology development program, the Court stated,

> "Statements must be written late enough in the development process to contain meaningful information but they must be written early enough so that whatever information is contained can practically serve as an input into the decision-making process." *Id.* at 1094.

A case more to the point is *Natural Resources Defense Council v. Nuclear Regulatory Commission*, 539 F.2d 824 (1976) concerning the NRC's generic environmental statement on the wide-scale use of mixed oxide fuel. Cognizant of its NEPA responsibilities, NRC's predecessor, the AEC, announced on February 12, 1974, that the generic environmental impact statement (GESMO) would be prepared *prior* to a Commission decision on the wide-scale use of mixed-oxide fuel. *See* 39 *Fed. Reg.* 5356. GESMO is intended to be a comprehensive NEPA evaluation of mixed-oxide fuel use and examines environmental issues such as nationwide environmental impact, adverse environmental effects, safety, safeguards, alternatives, and economics. *NRDC, supra*, at 832-33 and GESMO, Executive Summary at p. 1.

Prior to issuance of the safeguards section of the GESMO, and after written comment and limited public hearings, the NRC issued its decision announcing that certain interim licensing of recycle-related facilities (including reprocessing plants) should proceed prior to the completion of GESMO. 40 *Fed. Reg.* 53060-63.

It was this decision to proceed with the commercialization of reprocessing technology which was being reviewed by the Court in this case.

The holding in *SIPI supra*, was reiterated when the Court stated,

> "The requirements of the NEPA apply to the development of a new technology as forcefully as they apply to the construction of a single nuclear power plant. It cannot be doubted that the Congress, in enacting

> NEPA, intended that agencies apply its standards to the decision to introduce a new technology as well as to the decision to license related activity;. . . The fact that the environmental effects of such a decision about a new technology will not emerge for years does not mean that the program does not effect [sic] the environment or that an impact statement is unnecessary." *Id.* at 841.

The court went on to state,

> "NEPA clearly required the GESMO study; the principal question on this appeal is whether NEPA requires the agency to refrain from commercial implementation until that study is complete and a final agency decision is made." *Id.* at 842.

The Court found that the activity which the order would permit involves construction of nuclear separation and reprocessing facilities, conversion of light water nuclear reactors to use of mixed-oxide fuel, and the implementation of "interim" safeguards for the transportation of radioactive material. *Id.* at 844. The Court noted that:

> "Taking such action before the completion of the environmental impact analysis has been branded as making a 'mockery' of the procedural mandates of NEPA." *Id.* at 844.

Quoting from *SIPI*, the Court stated,

> "by the time commercial feasibility of the technology is conclusively demonstrated, and the effects of application of the technology certain, the purposes of NEPA will already have been thwarted. Substantial investments will have been made in development of the technology and options will have been precluded without consideration of environmental factors." (481 F.2d at 1093-94). *Id.* at 844.

The Court then prohibited the NRC from granting applications for commercial licenses to construct or operate

plutonium-related separation or reprocessing facilities and from granting licenses for commercial scale transportation or use of plutonium and uranium mixed oxide fuel until an adequate final GESMO (including the Safeguards Supplement) has been issued.

A second prerequisite for approval is a set of licensing procedures to implement the technology. Once the licensing requirements have been established, an applicant may submit to NRC a proposal for a reprocessing or waste disposal facility. Approval of the proposal and issuance of licenses to construct and operate the facility will only follow a review which includes, among other things, an EIS on the specific site and proposed project and a detailed safety review. 52 U.S.C. 5842; 42 U.S.D. 4332; 10 C.F.R. Parts 50-51; 42 Fed. Reg. 34393, July 5, 1977.

B.3 *Review of Government Agency Authority and Functions*

B.3.1 *Nuclear Regulatory Commission (NRC)*

The Atomic Energy Act of 1954 authorized commercial enterprises to own and operate nuclear facilities and to possess and use nuclear materials under restrictions embodied in regulations and licenses issues by AEC. The Energy Reorganization Act of 1974 assigned to NRC "all the licensing and related regulatory functions" previously performed by AEC. 42 U.S.C. 5841(f). NRC now regulates commercial and experimental construction and operation of nuclear production and utilization facilities and possession and use of nuclear source, special and by-product materials. 42 U.S.C. 2131-2140 (facilities), 2091-2099 (source material), 2071-2078 (special nuclear material), 2111-2112 (by-product material).

AFC/NRC has licensed the construction of three commercial fuel separations plants: the Nuclear Fuel Services

plant at West Valley, New York, in 1963; the General Electric plant at Morris, Illinois, in 1967; and the Allied-General Nuclear Services plant at Barnwell, South Carolina, in 1970. The West Valley plant then received a provisional operating license.

In 1971, AEC promulgated the present version of Appendix F to Part 50 of Title 10 of the U.S. Code of Federal Regulations, permitting fuel reprocessing plants to be located on privately owned property, requiring conversion of high-level liquid radioactive wastes to dry solid within five years of its production, and requiring delivery of the solid wastes to a federal repository within ten years of their separation from irradiated fuel. 10 C.F.R. Part 50, Appendix F(1). The regulation also provides that NRC will take title to the wastes upon their transfer to a federal repository and that NRC will later designate a "limited number" of federal repositories. 10 C.F.R. Part 50, Appendix F(2). NRC has yet officially to designate the location or custodian of any high-lead waste repository, although NRC reports assume that the custodian will be ERDA/DOE.[4] The Energy Reorganization Act of 1974 preserved NRC's authority to license "[f]acilities used primarily for the receipt and storage of high-level radioactive wastes resulting from activities licensed" by NRC. 42 U.S.C. 5842(3).

The NRC licensing procedure is complex, particularly for nuclear production of utilization facilities, which must comply with the requirements of Parts 50 and 51 of Title 10 of the U.S. Code of Federal Regulations. No facility is considered to be approved by AEC/NRC until it has received both a construction permit and an operating license. See

---

[4]See, e.g., NRC *Annual Report 1976*, 1977, at 74; NRC, *Environmental Survey of the Reprocessing and Waste Management Portions of the LWR Fuel Cycle*, NUREG-0116, October 1976, at 1-4, 4-29, 4-73.

Power Reactor Development Co. v. International Union of Electrical Workers, 367 U.S. 396, 411, 415 (1961).

Under present regulations, for which changes are likely during 1978, a high-level nucleear waste repository would not be a production or utilization facility as defined by the Atomic Energy Act and, therefore, would not be required by the Act to obtain a construction permit and an operating license. See 42 U.S.C. 2014(v) and (cc); 10 C.F.R. 50.2(a) and (b). Instead, it would require a nuclear by-product material license and a special nuclear material license. See 42 U.S.C. 2014(e), 2071, 2073, 2077, 2111; 10 C.F.R. 30.3, Parts 70 and 73. The Energy Reorganization Act of 1974 also requires NRC to "evaluat[e] methods of . . . storing high-level radioactive wastes to prevent radiation hazards to employees and the general public." 42 U.S.C. 5843(b)(2)(B). NRC must comply with the National Environmental Policy Act of 1969 by preparing detailed environmental impact statements for licensing actions "significantly affecting the quality of the human environment."

NRC does perform an evaluative function and issues legislatively authorized sanctions legally required for the operation of nuclear fuel reprocessing fuel storage and high-level waste disposal technologies.[5]

B.3.2 *Department of Energy (DOE)*

The Department of Energy Organization Act of 1977 consolidated the energy related functions of the Energy Research and Development Administration (ERDA) and of other federal agencies into a cabinet level Department of Energy (DOE). Public Law No. 95-91, 4 August 1977

---

[5]One legal analysis had concluded that NRC is the authorized agency for approval of both reprocessing plants and high-level nuclear waste disposal technology. Note, "Slaying the Nuclear Giants: Is California's New . . .

(codified in 42 U.S.C. 7101 et seq.) This statute did not supplement the authority of ERDA/DOE regarding nuclear fuel reprocessing, spent fuel storage or high-level waste disposal but merely transferred ERDA's preexisting functions to DOE. 42 U.S.C. 7151. Previously, the Energy Reorganization Act of 1974 had separated the developmental and regulatory duties of the Atomic Energy Commission (AFC), establishing ERDA and the Nuclear Regulatory Commission (NRC). 42 U.S.C. 5814(c), 5841(f). ERDA was assigned "to bring together and direct federal activities relating to research and development on the various sources of energy, . . . exercising central responsibility for . . . research and development programs respecting all energy sources, . . . encouraging and conducting research and development, including demonstration of commercial feasibility and practical applications of . . . fossil, nuclear, solar, geothermal, and other energy sources." 42 U.S.C. 5801(b), 5813(1)-(2). Although the Energy Reorganization Act did not specify ERDA's responsibilities related to nuclear fuel reprocessing, spent fuel storage or high-level waste disposal, it did authorize NRC to exercise "licensing and related regulatory authority" over "the following facilities of the Administration [ERDA]:

> (3) Facilities used primarily for the receipt and storage of high-level radioactive wastes resulting from activities licensed under [the Atomic Energy Act of 1954, as amended].
>
> (4) Retrievable surface Storage Facilities and other facilities authorized for the express purpose of subsequent long-term storage of high-level radioactive waste generated by the Administration [ERDA], which are not used for, or are part of, research and development activities. 42 U.S.C. 5842(3)-(4).

This language appears indirectly to authorize ERDA/DOE to undertake high-level radioactive waste management functions, although this provision is expressed in the portion of the statute which outlines the duties of NRC.

The underlying authority of DOE with respect to nuclear programs stems from the Atomic Energy Act of 1954, as amended which empowers AEC/ERDA/DOE to acquire materials and facilities; AEC/NRC, to establish regulations governing design, location and operation of nuclear facilities and governing possession and use of nuclear materials. 42 U.S.C. 2201(b), (e), (i)(3).

The annual ERDA/DOE authorization acts contain no provisions of particular relevance to nuclear fuel reprocessing, spent fuel storage or high-level waste disposal. Instead, these statutes simply indicate the total amount of money which can be appropriated to ERDA/DOE, not the specific functions for which the funds are to be spent.[6] The annual appropriations acts are also routinely nonspecific, but the fiscal year 1978 statute explicitly appropriated to ERDA/DOE up to $14 million for study of the Barnwell Nuclear Fuels Plant "to determine if that facility may be utilized in support of the nonproliferation objectives of the United States."[7]

On October 18, 1977, DOE announced a proposal to acquire and store spent fuel from nuclear power plants. This is merely a proposal, however, and details will not be available until 1978.

---

[6]See, e.g., Public Laws No. 94-187, 94-269.

[7]Public Works for Water and Power Development and Energy Research Appropriation Act, 1978, Public Law No. 95-96, 7 August 1977 (codified in 42 U.S.C. 5801).

B.3.3 *Environmental Protection Agency (EPA)*

B.3.3.1 *Air Pollution Control.*

The Clean Air Act Amendments of 1977 direct EPA to determine within two years whether emission of "radioactive pollutants (including source material, special nuclear material, and by-product material) . . . will cause, or contribute to, air pollution which may reasonably be anticipated to endanger public health." Public Law No. 95-95, 91 Stat. 685, August 7, 1977, Section 120(a). For radioactive pollutants found dangerous to public health, EPA must promulgate national primary and secondary ambient air quality standards. 42 U.S.C. 1857c-4(a)(2).

Each state must adopt an implementation plan within nine months designed to achieve these standards; EPA must approve or disapprove each plan within four months of its submission. 42 U.S.C. 1857c-5(a). Failure of a state to submit an acceptable plan requires EPA to promulgate its own implementation plan for that state. 42 U.S.C. 1857c-5(c)(1). For substances, including radioactive materials, found to contribute to pollution reasonably anticipated to result in increased mortality or serious or incapacitating irreversible illness, EPA must promulgate hazardous air pollutant emission standards within 1 year. 42 U.S.C. 1857c-7(b)(1); Public Law No. 95-95, Section 110. EPA is directed to delegate authority to enforce these limitations to states submitting adequate implementation proposals, but EPA retains authority to enforce these standards in all states. 42 U.S.C. 1857c-7(d), 1857c-8. For new stationary sources of any pollutant dangerous to public health, EPA may also promulgate standards of performance reflecting "the best technological system of continuous emission reduction . . . adequately demonstrated." Public Law No. 95-95, Section 109(c)(1)(A).

Before initiating regulation of source, special nuclear, by-product or derivate radioactive materials, EPA must "consult with" NRC. Public Law No. 95-95, Section 120(a). Within six months after EPA has initiated control over any of these materials, EPA and NRC must "enter into an interagency agreement with respect to those sources or facilities which are under the jurisdiction of [NRC] . . . to minimize duplication of effort." *Id.* NRC can block application of any EPA standard to NRC licensees only if NRC finds that the standard would "endanger public health or safety," but the President can overrule any such NRC determination within 90 days. *Id.*

B.3.3.2 *Ocean Dumping Regulation*

The Marine Protection, Research, and Sanctuaries Act of 1972 and its 1974 amendments prohibit any person or government agency from transporting any material for the purpose of dumping it into ocean waters without an EPA permit. 33 U.S.C. 1411. EPA may issue permits for transportation and ocean dumping of various materials but not "high-level radioactive waste, for which no permit may be issued." 33 U.S.C. 1412(a). Thus EPA is authorized to administer this statutory ban on ocean dumping of high-level radioactive waste.

B.3.4 *Transportation Agencies*

The Hazardous Materials Transportation Act of 1974 requires the Department of Transportation (DOT) to regulate the transportation of materials designated "hazardous," including radioactive materials. 49 U.S.C. 1803-1805. Shippers of hazardous materials are required to register with DOT and to comply with DOT safety regulations under penalty of fines and imprisonment. 49 U.S.C. 1805, 1809. Nuclear materials shipments also must comply with NRC regulations. See 10 C.F.R. Part 71. A 1973 memorandum

of understanding between DOT and NRC coordinates the exercise of their respective authorities over transportation of radioactive materials. See NRC, *Annual Report 1976*, p. 57.

B.3.5. *State Agencies*

Several federal statutes explicitly authorize state governments to regulate aspects of nuclear operations.

B.3.5.1. *State Authority Under Federal Statutes*

3.5.1.1 *Clean Air Act Amendments of 1977*

a. Commercial Facilities

Clean Air Act Amendments of 1977 authorize EPA and state governments to rate radioactive air pollutants, including source, special nuclear and by-product materials. Public Law No. 95-95, Section 120(a). States may exercise authority over radioactive emissions through air pollution control implementation plans approved by EPA or through enforcement of federal standards of performance for new emission sources or federal hazardous air pollutant standards. 42 U.S.C. 1857c-5(a), 1857c-6(c)(1), 1857c-7(d)(1). NRC may nullify the application of EPA or state standards to NRC licensees upon a finding that "such standard . . . would endanger public health or safety," but the President may overturn any NRC nullification within 90 days. Public Law No. 95-95, Section 120(c)(3). States may also exercise control of air pollution outside the federal framework; the Act explicitly does not preempt "the right of any State . . . to adopt or enforce (1) any standard or limitation respecting emissions of air pollutants or (2) any requirement respecting control or abatement of air pollution." 42 U.S.C. 1857d-1. According to the report of the Congressional conference committee on the 1977 Amendments:

> Thus, any State or political subdivision thereof, may establish standards more stringent than Federal, or where a Federal standards (sic) has not been established, may establish any standards they deem appropriate. Thus the provision would not preempt States and localities from setting and enforcing stricter air pollution standards for radiation than the Federal standards, and would not follow the holding of *Northern States Power Co. v. State of Minnesota*, 447 F.2d 1143 (8th Cir. 1971), aff'd 405 U.S. 1035 (1972) in the context of radioactive air pollution. H.R. Rep. No. 564, 95th Cong., 1st Sess. 143 (1977).

b: Federal Facilities

In 1976 the Supreme Court ruled that federal facilities need not comply with state requirements that sources of air pollution obtain and adhere to state permits. *Hancock v. Train*, 426 U.S. 167 (1976). The 1977 Amendments countermanded this decision, directing that every federal agency comply with:

> . . . all Federal, State, interstate, and local requirements, administrative authority, and process and sanctions respecting the control and abatement of air pollution. . . . The preceding sentence shall apply . . . to any process and sanction, whether enforced in Federal, State, or local courts or in any other manner. This subsection shall apply notwithstanding any immunity of such agencies, officers, agents, or employees under any law or rule of law. *Hancock v. Train*, 426 U.S. 167 (1976).

This directive means that all reprocessing and waste disposal facilities, whether federally or commercially owned and operated, must comply with state air pollution requirements.

B.3.5.2 *Hazardous Materials Transportation Act of 1974*

The Hazardous Materials Transportation Act of 1974 authorizes state agencies to regulate the safety of radioactive materials shipments if DOT determines that the state requirement affords equal or greater public protection than the federal standard and that the state regulation does not unreasonably burden interstate commerce. 49 U.S.C. 1811(a) and (b). Several states have undertaken to regulate transportation of radioactive substances.[8] Thus, final approval of reprocessing and waste disposal technologies may depend upon state regulation of the transportation of spent fuel and other high-level nuclear waste and the products of reprocessing.

B.3.5 *Atomic Energy Act of 1954, as amended*

The Atomic Energy Act of 1954, as amended, explicitly "recognize[s] the interests of the States in the peaceful uses of atomic energy [and] the need . . . for cooperation between the States and [NRC] with respect to control of radiation hazards associated with the use of [source, special nuclear, and by-product] materials." 42 U.S.C. 2021(a)(1) and (2). The Act permits NRC to delegate to state governments its authority to regulate these materials, except special nuclear materials in quantities sufficient to form a critical mass. 42 U.S.C. 2021(b). NRC is to retain authority to regulate the construction and operation of production or utilization facilities, including fuel reprocessing plants, and the disposal of nuclear material it deems sufficiently hazardous to require NRC supervision. 42 U.S.C. 2021(c).

---

[8]See, e.g., *Connecticut Public Act No. 76-321*, June 1, 1976, 2 *CCH Nuc. Reg. Rep.* 16,201; *Oregon Revised Statutes* 469.530 (1975).

In addition to authorizing NRC to delegate authority to states, the Act preserves the independent authority of the states "to regulate activities for purposes other than protection against radiation hazards." 42 U.S.C. 2020(k).

B.3.5 *Police Power of the States*

Pursuant to their power to regulate for the protection of health and welfare, several states have enacted statutes pertinent to nuclear fuel reprocessing and disposal of nuclear waste, including Georgia, Kentucky, Louisiana, Minnesota, Montana, New Mexico, Oregon, South Dakota, Texas, and Vermont.[9]

B.3.6 *Courts*

In determining whether administrative agencies have complied with statutes, courts can reverse approvals of technology or remand unreasonable refusals to approve. Federal agencies, as well as state agencies exercising federal authority, must comply with the National Environmental Protection Act of 1969 (NEPA), which requires preparation of an adequate environmental impact statement prior to federal action significantly affecting the environment. 42 U.S.C. 4332(C). The federal courts can enjoin federal actions not preceded by sufficient environmental analysis. See F. Anderson, *NEPA in the Courts*, 1973, at 239-45. Agencies must also comply with the Administrative Procedure Act, which forbids several categories of agency action, among them decisions, findings or conclusions found to be arbitrary or capricious or in excess of statutory jurisdiction, authority or limitations. 5 U.S.C. 706(2)(A) and (C).

---

[9]See 1977 La. Acts, No. 193; 1977 Minn. Laws, Ch. 416; 1977 Montana Laws, Ch. 68; N.M. Laws, Ch. 122; 1977 S.D. Sess. Laws, Ch. 283; Vt. Stat. Ann. tit. 10, Section 157; [1976] 168 *Energy Users Report* (BNA) A-21.

In *NRDC v. NRC* (Vermont Yankee) for example, the federal court ruled "arbitrary and capricious" NRC's promulgation of Table S-3 setting forth the environmental impacts of supporting nuclear fuel cycle activities. 547 F.2d 633 (D.C. Cir. 1976). "In substantial part, the materials uncritically relied on by the Commission in promulgating this rule consist of extremely vague assurances by agency personnel that problems as yet unsolved will be solved. That is an insufficient record" to satisfy the requirements of NEPA. *Id.* at 653.

Courts can, as illustrated in the *Vermont Yankee* case, reverse decisions of agencies if those decisions are not in compliance with procedural or substantive requirements of law. NRC's decision to implement reprocessing technology was reversed by a federal Court of Appeals in *NRDC v NRC* (GESMO) 539 F.2d 824 (1976) because of NRC's failure to comply with the National Environmental Policy Act. The Court held that NEPA required NRC to prepare a programmatic Environmental Impact Statement on reprocessing technology prior to its decision to license reprocessing plants. *Id.* at 842. Because NRC had failed to complete the EIS, the Court forbade NRC licensing of reprocessing plants. *Id.* at 846.

Thus, courts can have dramatic influence over decisions of agencies regarding licensing of plants or implementation of technology, even though they are not normally considered to be "agencies" of the federal government for purposes of approving facilities or technologies.

B.3.7 *Congress and the President*

Together, Congress and the President legislate; the President administers the laws under congressional oversight. Actions by these agents of government may influence or

ultimately determine whether the United States approves fuel reprocessing, spent fuel storage, or high-level nuclear waste disposal technology.

B.3.7.1 *Legislation*

The power of Congress and the President to determine the fate of these technologies appears plenary, unless limited by the Constitution. Recently, Congress and the President through the Clean Air Act Amendments of 1977 have altered significantly the framework for federal and state regulation of nuclear activities. Legislation revising drastically the authority of various federal and state agencies under the Atomic Energy Act has been proposed by the Carter Administration. See e.g., *Nucleonics Week*, November 3, 1977, at 3-4. Congress is also considering bills providing for use of the Barnwell plant in an international fuel recycling program and delegating management of high-level nuclear wastes to a federally chartered corporation. Future action by Congress and the President could require the Commission to change its selection of the "authorized agency" and its criteria for determining "approvals of technology."

B.3.7.2 *President*

The President may have authority to control the development of fuel reprocessing and waste disposal technologies outside of the described legislative framework. For example, on April 7, 1977, President Carter announced a policy "to defer indefinitely the commercial reprocessing and recycling of the plutonium produced in the U.S. nuclear power programs." NRC licensing of commercial reprocessing facilities might be overruled by the President on national security grounds. In addition, the President may impound funds to impede disfavored projects. Therefore, the President could under certain circumstances prevent the actual reprocessing of fuel from nuclear power plants. The Pres-

ident's views were, for example, particularly influential in NRC's decision to terminate all licensing proceedings for reprocessing related activities. NRC Mixed Oxide Fuel Order, December 27, 1977.

The President, the Courts, and Congress are not, however, generally considered to be "agencies" of the United States for purposes of "approving" facilities or technologies. A review of their functions is included merely to demonstrate that even though a technology or facility may be approved or licensed by the NRC, that action itself is not absolute assurance that a project will be successfully carried out.

APPENDIX C:
DEFINITION OF HIGH-LEVEL WASTE

The requirements of Section 25524.2 regarding waste disposal technology are limited to "high-level nuclear wastes." However, there is no generally accepted definition for "high-level nuclear waste".

Although the Energy Reorganization Act of 1974 assigned to NRC licensing responsibility over facilities for receipt and storage of "high-level radioactive waste", 42 U.S.C. 5842(3), neither that statute nor the Atomic Energy Act of 1954 defines high-level nuclear waste. The only statutory definition for "high-level radioactive waste" is found in the Marine Protection, Research, and Sanctuaries Act of 1972. The Act's definition found at 33 U.S.C. 1402(j) reads as follows: "high-level radioactive waste" means the aqueous waste resulting from the operation of the first cycle solvent extraction system, or equivalent, and the concentrated waste from subsequent extraction cycles, or equivalent, in a facility for reprocessing irradiated reactor fuels, or irradiated fuel from nuclear power reactors. This definition, of course, leaves open what the "equivalents" to the specified wastes are.

NRC regulations nowhere define the phrase "high-level nuclear waste", the phrase that is used in Section 25524.2 of the California Public Resources Code. However, 10 CFR Pt. 50, Appendix F, which is a statement of policy relating to the siting of fuel reprocessing plants and related waste management facilities, states in subsection 2, "for the purpose of this statement of policy 'high level *liquid* radioactive waste' means those aqueous wastes resulting from the operation of the first cycle solvent extraction system, or equivalent, and the concentrated facility for reprocessing irradiated reactor fuels." This provision merely defines which

liquid wastes produced by a reprocessing plant are to be considered "high-level," however, and is by no means a comprehensive definition of high-level nuclear waste.

When the definition first evolved, it was "clearly meant to address only one kind of problem", i.e., "what to do with the liquids resulting from reprocessing", and "no consideration was given to any other application of that definition." (Cunningham, Tr. 3/24/77, p. 133) Because of its limited scope, Dr. Carl Kuhlman of ERDA in his testimony before the Commission termed the regulatory definition "patently unsatisfactory" and indicated that "everyone in the industry, everybody in the regulatory business knows it's going to have to be changed." (Tr. 3/24/77, pp. 102-3)

Dr. Richard Cunningham, Deputy Director of the Division of Fuel Cycle and Material Licensing of the NRC, stated in testimony that what is treated as high-level waste is a function both of high specific activity of wastes and the persistence of their toxicity or their half-life. (Tr. 3/24/77, p. 144) Mason Willrich, author of significant reports on nuclear waste management, also concluded that the wastes of most concern were those of intense and persistent toxicity for which long-term isolation is required. (quoted in Tr. 3/24/77, pp. 110-111) A high specific activity waste may require heavy shielding for protection. However, if it does not persist for a significant period (say, it decayed to background levels in one year), then it would not be a management problem. Persistence seems to be a key consideration, therefore. Some wastes, notably those contaminated with transuranic elements such as plutonium, pose management problems not because of heavy shielding requirements, but because they are toxic in extremely small quantities (Stannard 1975, pp. I-19 to 36) and have long half-lives (on the

order of 20,000 years depending on the particular transuranic nuclide).

Therefore, as Carl Kuhlman testified, "it is necessary to have another category of waste which will cover that waste which technologically doesn't require heavy shielding but does have this long-lived biological hazard." (Tr. 3/24/77, p. 105) Moreover, he stated that in addition to spent fuel and high-level liquid wastes, transuranic contaminated wastes may also be placed under federal jurisdiction for disposal and, therefore, could be considered high-level waste. (Kuhlman, Tr. 3/24/77, p. 94)

A "high-level waste" material may be thought of as having a high radiotoxicity *hazard*, then, if it: (1) has a high level of activity and sufficient hard radiation that requires a lot of shielding; (2) has a long-lived biological toxicity; or (3) has a mixture of characteristics (1) and (2). This approach is clearly embodied in a definition of "high-level waste" given by the NRC in a recent notice denying a petition for rulemaking on the safety of waste disposal technology. (42 Fed. Reg. 34391-34394). In the notice, NRC states:

> The Commission's definition of high-level waste for purposes of this notice . . . includes high-level wastes as defined in 10 CFR Part 50, App. F., spent fuel rods, and transuranic contaminated wastes. (42 Fed. Reg. 34391, fn. 1)

"Intense and persistent toxicity" is a characteristic of many forms of nuclear waste:

1. *Aqueous solvent extraction waste streams from a Purex reprocessing plant.* According to the GAO, this waste is considered one of the most hazardous and complex of all radioactive wastes to manage. (GAO, 9/9/77, p. 3) It contains more than 99.9 percent of all the non-volatile fission products, 0.5 per-

cent of the uranium and plutonium, and all the other actinides formed in the reactor. (Y/OWI-8, p. 5) It is generally characterized by high levels of penetrating radiation, high heat generation rates, and a long toxic life.

2. *Spent Fuel (In the Absence of Reprocessing).* Spent fuel contains all the fission and transuranic elements found in high level Purex waste, but in addition contains all the unused uranium and plutonium as well as fission product gases which are otherwise released during reprocessing. Like high-level waste from reprocessing, it is characterized by high levels of penetrating radiation, high heat generation rates, and a long toxic life. (GAO, 9/9/77, p. 3) In testimony before the Subcommittee on Energy and the Environment of the House Committee on Interior and Insular Affairs in May, 1977, NRC testified that spent fuel, if it is to be disposed of or stored for long periods, requires consideration and care over the same long period of time as the high-level waste from reprocessing. (in GAO, 9/9/77, p. 24)

   Others agree. In testimony before the Commission, Carl Kuhlman called spent fuel rods "clearly high-level wastes." (Tr. 3/24/77, p. 103) The Group of Experts of the OECD Nuclear Energy Agency said "should the 'throw-away' option be adopted, the irradiated fuel elements would eventually have disposal requirements similar to high-level waste." (OECD, p. 60)

3. *Cladding Hulls.* Cladding hulls are the structural remains from the reprocessing step when a fuel rod is cut up and the fuel and waste products are leached out of commercial reactor fuel. It is contaminated with transuranics which do not require heavy shield-

ing but do present a long-lived biological hazard. (Kuhlman, Tr. 3/24/77, pp. 105-106) Therefore, they are "classed as clearly high level waste." (*Id.*, p. 103)

4. *Transuranic Contaminated Waste (TRU) From Reprocessing and Recycling Operations.* This type of waste contains much lower concentrations of radioactivity than traditional high-level waste and is generated by plutonium fuel fabrication and fuel reprocessing facilities. The waste generally consists of items such as clothing, gloves, bags, filters from effluent treatment systems, and equipment which have become contaminated with actinides. These are the same actinides that comprise the transuranic content of high-level waste which is of long-term concern. (Daly, Tr. 3/22/77, p. 133) Therefore, "you consider TRU waste in the same category you consider high-level waste." (Cunningham, Tr. 3/24/77, p. 144)

   Currently, materials containing long-lived alpha emitters at concentrations greater than 10 nanocuries/gram are designated as TRU wastes (Y/OWI-8, p. 6) and will be placed in deep geological repositories along with other materials which clearly are "high-level" waste by other criteria. (Kuhlman, Tr. 3/24/77, pp. 94-96)

   The level of contamination at which a material will be designated as TRV [*sic*] is currently undergoing review, but according to Gerald Daly, it probably will ultimately be decided on a sum level of transuranic contamination (Daly, Tr. 3/22/77, p. 131); further, he expects it to be a very low sum level.

5. *Long-Lived Wastes from Decommissioning.* When fuel cycle facilities are decommissioned, there is a wide variety of wastes including structural members made radioactive by neutron activation or contamination.

   The variety of materials of concern range from nuclides such as cobalt-60, which has high gamma activity but a relatively short half-life, to nickel-59 which, because of its long half-life (80,000 years) will "require very, very long periods of controlled storage" on the order of 500,000 years. (Manion, Tr. 3/22/77, pp. 155-156)

6. *Trapped Gaseous Fission Products.* Some of the fission products formed in a reactor are gaseous. Under proposed new standards and regulations, some of these gases must be captured when released during fuel reprocessing and disposed of. EPA proposed standards for normal operations of the uranium fuel cycle under 40 CFR 190 would place limits on the release of krypton-85 and iodine-129 effective in 1983. (FES, p. 70)

   The proposed action was taken, in part, "to limit the environmental burden of long-lived radioactive materials." (EPA, p. 8)

   The NRC is scheduled to develop final performance criteria for the storage or disposal of krypton-85 and iodine-129 by 1980. (NRC Responses, p. 1-65) Regulations for disposal would be proposed approximately ten months following development of the criteria. Additionally, criteria for the disposal of carbon-14 would be developed approximately 15 months after completion of criteria for krypton-85 and iodine-129, and tritium storage or disposal cri-

teria would be developed after carbon-14 disposal criteria. (NRC Responses, p. 1-65) Iodine-129 is of particular concern since it has a half-life of 1.6 × 10 years and is biologically active, being able to concentrate in the thyroid.

The Commission is persuaded by its technical evaluation of waste forms, the testimony and comments of participants, the recent NRC decision on reprocessing, NRC documents and studies, and the scope of the DOE programs discussed in the technical sections that a definition of high-level nuclear waste must include more than just the aqueous wastes resulting from the first cycle solvent extraction system in reprocessing. The Commission, therefore, adopts as its definition of high-level nuclear wastes, for the purposes of this report, wastes of intense and persistent toxicity, including *inter alia*, high-activity wastes from reprocessing, spent fuel rods and transuranic contaminated wastes. The Commission believes that it was the Legislature's intent to include within the scope of this section the highly toxic wastes which result from the operation of the nuclear fuel cycle. Therefore, if reprocessing were implemented and the majority of wastes generated were those from the reprocessing operations, those would be the wastes of greatest concern; and it would be those wastes for which the Commission must find that an adequate method of waste disposal exists.

However, since the fuel cycle has been redefined by the NRC to exclude reprocessing, spent fuel has become the major waste form. Thus, the Commission has had to investigate technologies and programs for the disposal of spent fuel. As noted above, a complete technical valuation of these programs is found in Section *4.0* of this report. Specific consideration of gaseous fission product wastes and long-lived wastes from decommissioning are reserved for further study.

4. Decision of the State of California Energy Resources Conservation and Development Commission, in the Matter of: Implementation of Nuclear Reprocessing and Waste Disposal Statutes, Docket Nos. 76-NL-1, 76-NL-3, Dated January 25, 1978 (Filed September 11, 1979 in the District Court in Support of Plaintiffs' Motion for Summary Judgment).

United States District Court for the Eastern District of California.

[Case omitted in printing.]

Before the State of California, Energy Resources Conservation and Development Commission.

In the Matter of: Implementation of Nuclear Reprocessing and Waste Disposal Statutes. Docket Nos. 76-NL-1, 76-NL-3.

DECISION.

In June 1976 the California Legislature passed three bills in response to the public debate over nuclear power. Two of those bills, now California Public Resources Code sections 25524.1 and 25524.2, prohibit further certification of nuclear power plants unless the Commission can find:

1. "that the United States through its authorized agency has identified and approved, and there exists a technology for the construction and operation of, nuclear fuel rod reprocessing plants;" and
2. "that there has been developed and that the United States through its authorized agency has approved and there exists a demonstrated technology or means for the disposal of high-level nuclear waste."

In September 1977, AB 1852 (Pub.Res.Code § 25524.25) was enacted requiring the Energy Commission to determine

whether all the findings required by sections 25524.1 and 25524.2 can now be made.

Over the past 15 months, the Commission has conducted an intensive investigation of the technical and programmatic status of the federal programs for nuclear fuel reprocessing and waste management. The investigation included public informational hearings, technical studies by consultants, participation in national and international proceedings and conferences on the nuclear fuel cycle, onsite meetings with technicians at the national laboratories studying the fuel cycle, as well as internal staff research and review.

At the request of the Senate Public Utilities, Transit and Energy Committee, the Commission transmitted to the Legislature in July 1977 an Interim Report on Nuclear Fuel Reprocessing and High-Level Waste Disposal summarizing the investigation to that date and highlighting areas requiring further research.

Following further investigation by the Commission, a draft report on waste disposal and reprocessing was issued by a Committee of the Commission on January 11, 1978. This report contains a comprehensive discussion of the status of reprocessing and waste disposal technology and federal programs to implement these technologies, as well as the Committee's findings and conclusions under the provisions of sections 25524.1 and 25524.2.

A synopsis of the conclusions on the status of reprocessing and waste management is presented below.

Reprocessing

Since section 25524.1(a) applies only to "thermal powerplant(s) requiring the reprocessing of fuel rods," at present, this section is not applicable to light-water reactors in California. Evidence has not shown that reprocessing is required for the technical operations of light-water reactors.

The economic incentive to reprocess is uncertain, and the federal government has determined that at present, nuclear weapons proliferation concerns stemming from reprocessing outweigh any economic advantage that may exist. The federal policy is, however, subject to some uncertainty. Because of this uncertainty and in the interest of providing the Legislature with a comprehensive analysis of both reprocessing and waste management, a complete review of reprocessing technology and the history and present status of the federal government's programs for implementing those technologies has been prepared.

The report shows that a technology exists for the basic reprocessing operation, that is, solvent extraction technology producing separated streams of uranium, plutonium and high-level waste. However, a complete technology for the successful operation of a commercial reprocessing plant meeting all regulatory requirements, as required by the statute, does not exist.

Furthermore, the United States Nuclear Regulatory Commission, in response to a request by the President, has terminated all activities related to the implementation of reprocessing technology, including all pending reprocessing plant licensing proceedings. This action makes clear that there has been no federal approval of reprocessing, and that the approval process itself has been terminated. Therefore, the required findings of section 25524.1(a), if that section were presently applicable, could not now be made.

High-Level Waste Disposal

California Public Resources Code section 25524.2 conditions new nuclear plant construction in the state on a finding by the Energy Commission that a high-level nuclear waste disposal technology has been developed and demonstrated, and that the technology has been approved by the

appropriate federal agency. The conclusions on the demonstration and federal approval of waste disposal technology are summarized below.

While several concepts for waste disposal have been postulated, none have been confirmed to be feasible. Necessary experimental verification has not yet been completed. At present no demonstration project exists although one experimental facility is now in the early planning stages. The report thus concludes that waste disposal technology has not yet been demonstrated.

Two of the necessary prerequisites to federal approval of waste disposal technology are completion of a generic environmental impact statement on waste disposal technology and establishment of regulations and criteria for licensing waste disposal facilities. While the federal government presently has programs to address each of these requirements, those programs have not been completed. We, therefore, have neither an environmental assessment of waste disposal technology nor even the regulations necessary for NRC licensing of a particular waste disposal facility. Furthermore, the criteria to be used in selecting a specific site have not yet been issued.

The Energy Commission therefore must find that even the initial steps necessary for federal approval of waste disposal technology have not been completed. The Commission cannot, for this reason as well as the absence of demonstrated waste disposal technology, make the affirmative findings required in Public Resources Code section 25524.2.

CONCLUSION

Having carefully considered the evidence before it, the analysis performed by the Committee and the findings and conclusions reached therein the Energy Commission finds that:

1. Reprocessing is not required as a part of the fuel cycle for light-water reactors. Therefore, section 25524.1(a) does not at this time apply to new light-water reactors proposed in California.
2. If section 25524.1(a) were applicable at this time, the findings required by that section could not be made.
3. Under section 25524.1(b) the Commission will, on a case-by-case basis, review carefully the spent fuel storage capacity at individual reactor sites.
4. The affirmative findings on waste disposal technology required by section 25524.2 cannot be made at this time.

Because hearings on the Committee's draft report have just been completed, the Committee of the Commission is directed to review comments of the Commission members and the public and to incorporate any necessary revisions or corrections into a detailed report to be submitted to the Commission for adoption and transmittal to the Legislature within 30 days. A copy of this Decision shall be transmitted to the Legislature immediately.

Dated at Sacramento, California, this 25th day of January, 1978.

/s/ Richard L. Maullin
RICHARD L. MAULLIN
Chairman

Dissenting:

/s/ Alan D. Pasternak
ALAN D. PASTERNAK
Commissioner

/s/ Ronald D. Doctor
RONALD D. DOCTOR
Commissioner

/s/ C. Suzanne Reed
C. SUZANNE REED
Commissioner

/s/ Emilio E. Varanini, III
EMILIO E. VARANINI, III
Commissioner

5. Affidavit of Terry R. Lash, Dated October 18, 1979 (Filed October 29, 1979 in the District Court in Opposition to Plaintiffs' Motion for Summary Judgment).

United States District Court for the Eastern District of California.

[Case omitted in printing.]

AFFIDAVIT OF TERRY R. LASH

State of California, County of San Francisco — ss:

TERRY R. LASH, being duly sworn, deposes and says as follows:

1. I am employed as a staff scientist by the Natural Resources Defense Council (NRDC), an intervenor in this matter, and I have worked in this capacity for over five years in NRDC's Western Office, now located in San Francisco, California. This affidavit is submitted in connection with intervenor's opposition to plaintiffs' motion for summary judgment herein.

2. I hold a doctorate from the Department of Molecular Biophysics and Biochemistry of Yale University. During the last five years, I have devoted the bulk of my time as a staff scientist for NRDC to the study of the technical and institutional questions associated with the management and disposal of radioactive waste generated, *inter alia*, by commercial nuclear power reactors. Since 1973, I have been the director of a special Project on Radioactive Wastes established in NRDC's Western Office. As part of this project, I co-authored in 1974 a "Citizens' Guide: The National Debate on the Handling of Radioactive Wastes from Nuclear Power Plants." In 1977, I served as a consultant to the California Energy Resources Conservation and Development Commission ("Energy Commission"), advising it on,

and participating in, the Commission's hearings on implementation of the California Nuclear Statutes, which are the subject of his lawsuit.

3. Based on my technical expertise on the subject of radioactive waste management, I have also served as a consultant to the federal Office of Science and Technology Policy and a member of the Risk/Impact Panel of the Committee on Nuclear and Alternative Energy Systems for the National Academy of Sciences — National Research Council, the Task Force on Uranium Mill Tailings of the Argonne National Laboratory (under contract with the United States Nuclear Regulatory Commission), the Advisory Committee on Radioactive Waste Management for the Western Interstate Nuclear Board, and the Technical Advisory Group to the federal Interagency Review Group on Nuclear Waste Management. I have presented testimony on the subject of radioactive waste management before the Oregon Energy Facility Siting Council, the Wisconsin Public Service Commission and in the United States Congress before the House Interior and Insular Affairs Committee, House Government Operations Committee, and the Senate Subcommittee on Nuclear Regulation. I have personal knowledge of the matters hereinafter set forth, and if called to present testimony in this matter, I would be competent to testify thereto.

4. One of the California Nuclear Statutes challenged in this suit relates to radioactive waste disposal. Section 25524.2 of the Public Resources Code predicates the siting of a nuclear power plant within the state by the California Energy Commission upon a finding that "there has been developed and the United States through its authorized agency has approved and there exists a technology or means for disposal of high-level nuclear waste."

5. The purpose of this affidavit is to set forth before this Court the nature of the radioactive wastes and disposal

technologies which are referred to in this law, the technical and institutional problems which remain unresolved in providing for a means of waste disposal, the federal government's efforts to resolve this problem, and the effect of present and future uncertainties in this area on the continued use or reliability of nuclear power plants as a resource for generating electricity in California and elsewhere.

[*The Impact on the Reliability and Cost of Nuclear Power of the Failure to Develop Adequate Means of Radioactive Waste Disposal*]

6. The development of nuclear power has become a matter of public controversy in part because of concerns about the potential risks to public health and safety which may be incurred. These concerns relate not only to the potential for accidents at nuclear power plants themselves, but also the potential risks to public health and safety from the mining and milling of uranium to fuel these facilities, from the transportation of these nuclear fuels and the waste products of nuclear plants through populated areas, and the unresolved problem of adequately storing the waste products of nuclear plants.

7. While these questions have perhaps received the greatest public attention, in my judgment of equal concern to energy planning are the questions of how reliable and costly reliance upon nuclear power will be. Because a lead time of over twelve years is required for construction of a nuclear power plant, the state has little flexibility to meet increased growth in the need for electricity if those plants are substantially delayed, become "dry holes" or their use has to be aborted because of unresolved safety problems. Extended delays for nuclear power plants may occur because they require federal licenses or permits that are becoming harder to obtain and because they require provision of re-

liable radioactive waste storage. Those are matters largely under the control of sources outside the state of California and in each instance there are substantial doubts about their availability.

8. Moreover, the construction of large-scale nuclear power plants and associated facilities requires extraordinary amounts of capital. Present construction costs are estimated in excess of one billion dollars for a thousand megawatt nuclear power plant, and costs are escalating rapidly. If utilities are not successful in raising the required capital, the state may face a shortfall in the electrical energy supply assumed in development plans which rely upon nuclear power. Indeed, one recent proposal to construct a nuclear power plant in California — the Sundesert Project — was predicated upon extraordinary financing arrangements and utility rate increases that are unprecedented in California. It is therefore apparent that in any state's energy planning which includes consideration of future use of large scale "central station" generating resources like nuclear power, foremost among the questions presented are the reliability and cost of reliance upon these power sources.

9. Thus, I wish to emphasize that nuclear power cannot be considered a sound or reliable future source of electricity for any state in this country, unless satisfactory means are developed for permanently storing the radioactive wastes generated by all nuclear power plants. At present, these wastes are *temporarily* stored in cooling ponds at each nuclear reactor site, but this method is not acceptable as a basis for permanent storage of the wastes. As described below, despite almost 30 years of scientific effort to develop safe methods of permanent waste disposal, significant technological uncertainties remain unresolved. The radioactive wastes generated by nuclear power plants are among the most toxic substances that would be handled in large quan-

tities. The toxicity of some waste components remains high for thousands of years, furthermore. Accordingly, a technological solution to waste disposal must accomplish the unprecedented task of virtually complete isolation from life on this planet in perpetuity.

10. In my judgment, if it becomes evident that satisfactory methods of waste disposal cannot be developed, we will perforce have to forego any further reliance on nuclear power, and public concern about the problem may force a shutdown of existing nuclear power plants in order to limit the magnitude of the problem. In the shorter term, if additional acceptable storage facilities for these wastes cannot be developed, then the temporary storage capacity at reactor sites may be soon exhausted, thus forcing a shutdown or interruption of those power plants until the wastes can be transferred to an acceptable interim storage facility.

11. In this affidavit, I have described the kinds of health and safety concerns posed by radioactive wastes and the technological uncertainties that exist in finding a permanent method for their storage. However, by my extensive discussion of these issues, I do not mean to imply that the potential radiation hazards from waste disposal are what prompted the passage of California's Nuclear Statutes. In my view, the questions of reliability and cost of nuclear power are substantially more significant for a state like California, and these are issues which are affected by the matters referred to in those statutes. Indeed, so far as I am aware, California has never been proposed as the site for a permanent high-level radioactive waste disposal facility, and the only potential site now under consideration is in New Mexico.

12. In sum, no state engaged in planning for the energy resources to meet its future needs, can afford to ignore the technological and institutional problems with waste disposal

for the simple reason that these problems, wherever they occur, may ultimately force shutdowns or extended interruptions of the use of nuclear power plants throughout the country. In this regard, substantial doubts exist about the reliability of nuclear power to meet a state's energy needs, until greater progress is made in resolving these problems.

[*Radioactive Wastes: Their Toxicity and Magnitude*]

13. The "high level nuclear wastes" which are referred to in Section 25524.2 of the California Nuclear Laws are produced by commercial nuclear power plants. These plants generate electricity through the fissioning of uranium and plutonium atoms in the core of the nuclear reactors. This fission process ("splitting of the atom") produces heat which converts water into the steam which in turn powers electric generators. The primary waste product of these nuclear reactors is the "spent fuel," comprised of irradiated fuel rods which are withdrawn from nuclear reactor cores as the fissionable isotopes are depleted.

14. These radioactive wastes are highly toxic substances, and their disposal perhaps represents the most difficult problem of the nuclear era. Human exposure to radiation from such wastes can produce immediate death, life-shortening cancer, or serious genetic defects affecting future generations. Moreover, some of these radioactive wastes are extremely long-lived. Many remain potentially lethal for hundreds of thousands of years. In consequence of their extraordinary toxicity and longevity, radioactive wastes will require isolation from the biosphere for periods of time unparalled in human history.

15. For example, plutonium-239 is one of the most abundant and dangerous of the radionuclides generated by commercial nuclear reactors. It is so toxic that as little as three micrograms — a "speck" — can cause lung cancer

in animals. Moreover, its exceedingly long half-life (decay period) of 24,000 years means that it will remain potentially harmful for at least many tens of thousands of years. Accordingly, plutonium-239, like some of the other radioactive wastes which are produced as a result of the operation of nuclear power plants, must be isolated from the environment essentially in perpetuity.

16. When measured by amount of radioactivity (as an indicator of potential hazard), significant quantities of commercial radioactive wastes have been generated already in the United States, and the waste inventories are growing rapidly. Using this measure, the current inventory of radioactive wastes in temporary storage is expected to double within three or four years; and the inventory produced by commercial reactors by the end of the century may be 20 times greater than that currently on hand.

17. The extraordinary toxicity and longevity of these radioactive wastes make it imperative that a permanent, safe method of storing these wastes be developed and implemented in the near future. The continued failure to accomplish this fundamental task will not only jeopardize the health and safety of future generations, but will also make further use of nuclear power substantially more unreliable and costly.

18. For example, in 1977 the United Kingdom's Royal Commission on Environmental Pollution called for a solution to the waste disposal problem prior to the continued generation of such wastes:

> ". . . [t]here shall be no commitment to a large program of nuclear fission power until it has been demonstrated beyond reasonable doubt that a method exists

to ensure the safe containment of long-lived, highly radioactive wastes for an indefinite future."[1]

19. The United States General Accounting Office has also noted that a solution to the waste disposal problem is critical to the expansion of the nuclear industry:

"The unsolved problem of radioactive waste disposal threatens the future of nuclear power in the United States. Nuclear critics, the public, business leaders, and Government officials concur that a solution to the disposal problem is critical to the continued growth of nuclear energy."[2]

20. To the same effect is a recent report by the House Committee on Government Operations:

"It is incumbent upon the Federal decisionmakers, whoever they may be, to carefully weigh the costs and dangers relative to the back end of the fuel cycle before blindly forging ahead, even for a moment and for whatever distance.

The time for that evaluation is now. The Nation cannot wait any longer."[3]

21. Despite these concerns, the efforts of the federal government to develop a satisfactory program of radioactive waste disposal have so far been unsuccessful. They have been beset by a host of delays, missteps and changes in direction, as described below.

---

[1]Sixth Report, *Nuclear Power and the Environment* 131 (September 1976).

[2]General Accounting Office, Report to the Congress, *Nuclear Energy Dilemma: Disposing of Hazardous Radioactive Wastes Safely*, cover page (September 9, 1977) (hereinafter "GAO Waste Disposal Report").

[3]H.R. Rep. No. 95-755, 95th Cong., 1st Sess. 2 (1977).

[*The Federal Government's Efforts to Find a Satisfactory Method of Waste Disposal*]

22. As previously noted, Section 25524.2 of the California Nuclear Laws requires as a predicate to further reliance on nuclear power as a source of electricity for this state, that a federally approved and demonstrated technology or means for the disposal of high-level waste exists. Although the search for an appropriate waste disposal technology began about 30 years ago, there still exists no "approved" or "demonstrated" technology for radioactive waste disposal. Some review of the history of these efforts may be helpful in apprising the Court of the technical and institutional problems which apparently prompted the above requirement of the California Nuclear Laws.

23. After the passage of the Atomic Energy Act in 1954, the Atomic Energy Commission (AEC)[4] and its advisors focused on bedded salt deposits as the most likely geological formation for disposal of the long-lived wastes. Then, in the early 1960's, the AEC de-emphasized the goal of achieving federally regulated, deep geologic disposal. Instead, it proposed to delegate responsibility to industry and eventually a state government under a plan that contemplated indefinite storage of reprocessed high-level wastes in liquid form in near-surface storage tanks through the repeated

---

[4]Pursuant to Section 104 of the Energy Reorganization Act (ERA) (42 U.S.C. § 5814), the Atomic Energy Commission was abolished and its functions split between the Energy Research and Development Administration (ERDA) and the NRC (42 U.S.C. §§ 5811 and 5841). ERDA was given responsibility for research and development programs related to nuclear activities. 42 U.S.C. § 5813. The NRC was given licensing responsibility over nuclear activities, including licensing of nuclear reactors (42 U.S.C. § 5843) and waste disposal facilities (42 U.S.C. § 5842). Pursuant to Section 202 of the Department of Energy Organization Act, Pub. L. No. 95-91 (1977), ERDA's nuclear waste management development and research functions were transferred to the Department of Energy.

transfer of these wastes to new tanks as the old storage tanks wore out.

24. This program, instituted at a storage facility near West Valley, New York, was marked from the beginning by inadequate study and unforseen safety problems. Although the liquid wastes at West Valley were placed in storage tanks, no method was established in advance to ensure that the wastes could be safety removed from the tanks when it came time to transfer them. Even today, no satisfactory, safe removal method has been developed for the wastes at West Valley, and additional special research must now be conducted to rectify past errors in decision-making. The cost of rectifying the waste disposal problem at West Valley may be more than five hundred million dollars.

25. In the late 1960's the government renewed its emphasis on the development of a deep geologic repository, and the AEC finally selected an abandoned salt mine near Lyons, Kansas, as the location for a pilot repository. However, later investigation disclosed that water from adjacent mining operations might seep into the repository and dissolve the salt. In early 1972, the Lyons, Kansas, project was abandoned, following strong political opposition to the proposed repository within the State of Kansas.

26. Next, in May 1972, the AEC announced its plan to build a so-called "retrievable surface storage facility" or "RSSF" — an engineered facility constructed near the surface of the earth — to store the wastes for an indeterminate period of time, while the prolonged search for an acceptable, safe geological site continued. Three years later, however, the waste program changed direction once again. In the spring of 1975, the Energy Research and Development Administration (ERDA) withdrew the request for budgetary funding for the RSSF, although the RSSF was purportedly

retained as a back-up system in case other repository plans failed.

27. With a resurrected emphasis on the development of a deep geologic repository, ERDA expanded its efforts to locate a potential geologic formation, and in 1976 focused ultimately on a salt formation in the State of Michigan. However, in June 1977, after residents of northern Michigan had voted overwhelmingly to prohibit the siting of a waste repository within their state, the federal government abandoned its efforts to locate a waste repository in the State of Michigan.

28. The government has now begun anew the search for potential salt or other geological formations that can serve as a permanent disposal facility. However, in addition to the unresolved technical problems, serious political and social resistance to the development of a geologic repository continues to mount throughout the country. Against this backdrop of past mistakes, abandoned programs and mounting political opposition, there is no guarantee that the federal government can or will ever develop a safe, permanent waste disposal facility.

[*Continuing Uncertainties About the Feasibility of Safe Waste Disposal*]

29. In the wake of the federal government's so far unsuccessful efforts, there remains substantial uncertainty whether the federal government will even have the capability to develop and implement a safe method for long-term disposal of radioactive wastes. A number of recent studies point out that the existing program is inadequate.

30. For example, a government-sponsored report prepared at the Energy Laboratory of the Massachusetts Institute of Technology concluded as follows:

"The existing organization for radioactive waste management is likely to be unworkable if left unchanged."

* * * *

"The existing framework for waste regulation is likely to be ineffective if left unchanged."[5]

Similarly, a report prepared by the Jet Propulsion Laboratory for the President's Office of Science and Technology Policy concluded

"that the U.S. program for high-level waste management has significant gaps and inconsistencies."[6]

31. The United States General Accounting Office concluded that the facts do not substantiate any optimism that safe waste disposal is assured:

"After several decades of work, AEC did not, and ERDA has not yet (1) demonstrated acceptable solutions for long-term storage and/or disposal of its high level waste and (2) satisfied the scientific community that present storage sites are geologically suited for long term storage or disposal."

* * * *

"The Energy Research and Development Administration has begun a program to demonstrate by the mid-1980's the feasibility and safety of placing radioactive wastes in deep geological formations. GAO points out that not only has progress been negligible to date, but that future program goals are overly optimistic because the Energy Research and Development Administration faces many unsolved social, regulatory and geological obstacles."[7]

---

[5]M. Willrich, *Radioactive Waste Management and Regulation*, Energy Laboratory Report No. MIT-EL 76-011, at 1-5, 1-6 (December 1976).

[6]T. English, *An Analysis of the Back End of the Nuclear Fuel Cycle with Emphasis on High-Level Waste Management*, Jet Propulsion Laboratory Publication 77-59, viii (August 12, 1977).

[7]G.A.O. Waste Disposal Report, p. 50 and cover page.

32. In the last few years, the debate within the scientific community about the ultimate feasibility of safe waste disposal has greatly intensified, and the federal agencies charged with responsibility in the development of a waste disposal system have issued a number of studies which highlight the continuing uncertainties that exist. For example, a task force appointed by the Department of Energy, the agency with primary authority for development of the disposal system, issued its study of the problem in February 1978, entitled *Report of the Task Force for Review of Nuclear Waste Management* (February 1978, DOE/ER-0004/D) (hereinafter "DOE Report"). At the outset, the DOE Report notes that the "federal government, as an entity, has not formally reached a conclusion on ultimate disposal of high level wastes" (p. 7). The report concludes that an earlier deadline of 1985 set by the federal government for the establishment of a waste repository will now be delayed until 1988, at "the earliest date" (p. 12). It is also apparent from the DOE Report that fundamental technical questions continue to exist about the threshold determination of what geologic medium is appropriate for waste disposal.

33. The United States Geological Survey (USGS), the most knowledgeable federal agency on technical geological matters, has also recently emphasized the existing uncertainties involved in assessing the capability of geological formations to isolate radioactive wastes,[8] and these opinions are reinforced by a recent report to the United States Environmental Protection Agency by a special panel of earth scientists.[9]

---

[8] *Geologic Disposal of High-Level Radioactive Waste — Earth-Science Perspectives*, Geological Survey Circular 779 at 3 (1978).

[9] *Report of Ad Hoc Panel of Earth Scientists, The State of Geological Knowledge Regarding Potential Transport of High-Level Radioactive Waste From Deep Continental Repositories*, EPA/520/4-78-004, at 32 (June 1978).

34. Finally, in March 1979, a federal interagency review group prepared a comprehensive report for submission to the President, reviewing the nuclear waste disposal issue and recommending changes to improve the existing program. The final report, entitled *Report to the President by the Interagency Review Group on Nuclear Waste Management*, TID-29442 (March 1979), acknowledges that "[t]he management of radioactive wastes for the past three decades can be characterized by inadequate integration of waste management R&D [research and development] efforts . . . caused in part by inadequate perceptions of the additional technological and scientific capabilities needed to develop an acceptable disposal capability . . . ." (p. 2). Among other things the report proposes an "idealized" schedule, which shows that the earliest possible time for completion of a high-level waste repository may be slipped again to as late as 1995, depending on the approach that is chosen. *Report to the President by the Interagency Review Group on Nuclear Waste Management*, at 60, 126, 142.

35. It is apparent from the above studies that a significant doubt exists among the experts in the nuclear field whether the government's waste disposal "program" can achieve its goal of safe waste disposal.

[*Conclusion*]

36. At the time the California Nuclear Statutes were passed, substantial uncertainties existed as to whether the federal government would ever drop or implement a system of radioactive waste disposal which would satisfy acceptable levels of protection for public health and safety. For almost thirty years, the federal government's program to develop these technologies had been plagued by a series of mistakes, changes in direction, inadequate analyses and aborted test projects. In turn, these uncertainties posed great risks that

reliance on nuclear power as a source of energy for California would have to be aborted at a later time or that nuclear power plants would otherwise be limited in their operation because of the continuing failure to provide adequate, safe capacity for storage of their waste products.

37. In the two and a half years since the passage of the California Nuclear Statutes, the scientific debate over the feasibility of waste disposal technologies has in fact greatly intensified. As a result, even under an "idealized" schedule, the siting of a permanent radioactive waste repository may not occur for at least fifteen more years. In fact, there remains substantial uncertainty whether the development of a safe, permanent method of waste disposal is ultimately feasible or can ever be accomplished.

/s/ Terry R. Lash
TERRY R. LASH

Subscribed and sworn to
before me this 18th day
of October, 1979:

/s/Janelle Viglini
Notary Public

My commission expires: 9/10/83

[Seal]

6. Declaration of Charles Warren (and Supporting Exhibits), Dated October 22, 1979 (filed October 29, 1979 in the District Court in Opposition to Plaintiffs' Motion for Summary Judgment).

United States District Court for the Eastern District of California.

[Case omitted in printing.]

DECLARATION OF CHARLES WARREN

I, Charles Warren, declare:

All of the matters stated herein are known to me of my personal knowledge, or (where indicated) of my personal qualifications, experience, and studies, and if called as a witness I would testify as follows:

1. At present, I am a consultant and lecturer on energy and environmental policy.

2. Until June 30, 1979, I was Chairman of the President's Council on Environmental Quality, a position I held since my appointment by President Carter on March 10, 1977. The Council, established pursuant to the National Environmental Policy Act of 1969 (NEPA), 42 U.S.C. 4321 *et seq.*, is primarily responsible for implementing NEPA, by reviewing, monitoring and reporting on changes in the nation's environmental quality and by recommending to the President national policies and programs related to environmental issues. Among the many issues addressed by the Council, energy is one of the most significant, including specific issues related to nuclear power.

Under my chairmanship, CEQ was involved in studying several aspects of nuclear power development, principally international nuclear non-proliferation and nuclear waste disposal issues. We also monitered the attempts of state and federal agencies to resolve the waste disposal issue, and

finding that little progress was being made, CEQ urged that a deadline be established by the federal government for a solution to the waste disposal problem, after which time, no further nuclear powerplant construction licensing would be permitted until an adequate waste disposal technology had been developed. The Council also actively participated in the President's Interagency Task Force on Nuclear Waste Management.

3. Prior to my appointment to CEQ, I served fourteen years as an Assemblyman in the California Legislature representing the 56th and 46th Districts in Los Angeles from the years 1963 to 1977. While a member of the California Assembly, I served as Chairman of the Resources, Land Use and Energy Committee in 1975-77; Chairman of the Energy and Diminishing Materials Committee in 1974-75; and Chairman of the Planning and Land Use subcommittee on State Energy Policy in 1972-74.

4. I was principal author in 1973 of Assembly Bill 1575 which the legislature enacted as the Warren-Alquist State Energy Resources Conservation and Development Act, Public Resources Code Sections 25000, *et seq.*, of which certain provisions are the subject of this lawsuit. In 1976, as Chairman of the Assembly Resources, Land Use and Energy Committee, I was principal author of Assembly Bills 2820-2822, the California nuclear fuel cycle and undergrounding laws, enacted as Public Resources Code Sections 25524.1-25524.3, also challenged here.

5. In this declaration, I will set forth the facts relating to the history and rationale for the legislation which I proposed, which the California legislature adopted, and which two California utilities now challenge. I will first describe the extensive legislative study and hearings on California's energy quandry which led to the enactment of the original

Warren-Alquist Act. I will then describe the further actions and concerns which produced three nuclear-energy related amendments to that Act in 1976.

The Warren-Alquist Act

6. One of my major concerns during the years I served in the California Legislature, which is reflected in legislation I introduced, was prudent development of energy resources which did not unduly impair the quality of California's environment or threaten its economy. I introduced AB 1575 at a time when the public was only slowly becoming aware of the need for energy conservation and for sensitive energy development which respected both economics and environmental protection.

7. I knew that numerous state and local agencies in California, pursuant to their traditional police powers, had long possessed the authority to regulate the siting, construction, and operation of electric generating power plants in order to protect public health and safety, to promote environmental quality, and to ensure the wisest use of land within their respective jurisdictions. During legislative hearings it became apparent, however, that this fragmented authority spread over so many agencies, resulted in haphazard, inconsistent and often totally ineffective regulation. In addition, even though the California Public Utilities Commission had exercised its constitutional authority to regulate the economic activities of California utilities to ensure a fair rate of return to the companies and to protect the consuming public from unnecessarily high rates, PUC regulation was inadequate, in my view, in its lack of any serious scrutiny of alternatives to utility proposals and its lack of comprehensive energy resource planning.

8. I found that existing authority was so fragmented among state and local agencies, that in order to construct

a proposed power plant a utility might find itself faced with the prospect of obtaining as many as forty or fifty permits from different agencies. I found that these local and state agencies regulated in a variety of ways many aspects of powerplant construction and operation, including structural design, environmental impacts such as water quality and air quality, transportation of fuel and materials into and out of the facility, waste disposal, land use and socioeconomic impacts, emergency services requirements, transmission line locations and impacts, seismic considerations, and economic impacts. In many instances I discovered that the problem was not as much lack of regulation, as it was uncoordinated and overlapping regulation by the agencies and local governments who were entitled to regulate under existing state law.

In addition, California laws before 1975 provided no coordinated, systematic, state-wide review of forecasts for energy demand, in fact, no significant projections of future demand were prepared by anyone other than the utilities and those were not publicly scrutinized. There was no mechanism for comprehensive planning to meet energy needs, except blind faith in the unchallenged judgment of utility executives. No public process existed for a rational selection among alternative energy technologies or alternative sites for a given technology. Decisions made behind closed doors in utility executive offices constituted California's energy resource planning.

The most disturbing aspect of the status quo in my view was the exclusion of the public from this energy resource decision-making process. The utilities decided privately what was best for the people of the State of California and that is what they got. I was already aware of the significant impact that energy choices would have on the future of Californians and I was determined to replace those decisions

which the utilities viewed as their private reserve with an open and public planning process in which all citizens could participate.

9. The existing fragmented authority to regulate power plants, particularly siting authority, and the absence of coherent energy planning and policy formulation, motivated the Legislature to consider centralizing planning and siting authority in one state-wide body. I was particularly concerned about rationalizing the energy planning process. Therefore, the Assembly Committee on Planning and Land Use over which I presided held a special hearing on power plant siting on November 18, 1971. Testimony at these hearings demonstrated widespread support for state level energy planning and power plant siting. In these hearings, Pacific Gas and Electric Co. (''PG&E'') and Southern California Edison (''SCE'') strongly supported the concepts of a ''one-stop state permitting agency'' for power plant siting and licensing, and ''site-banking'' — presenting a state siting agency with multiple sites, whose approval could then be ''banked'' for future power plants.

At the hearing, David Fogarty, Vice-President of Southern California Edison Company, comprehensively summed up the necessary factors which a state siting agency should address in ''making judgments about power plant sitings'':

1. Population growth factors to include at least a 20-year projection of population and industrial growth in the utility's service area and in the area surrounding the proposed plant site.
2. An estimate of the public's acceptance of the proposed power plant should be made.
3. Power requirements at present and projected in the future for the requesting utility's service area. These estimated power requirements should be obtained from as many different sources as are

available. An independent study should be made if estimations are not available.

4. Land requirements of the plant site and for associated transmission lines, fuel lines, fuel tank farms, safety buffer areas, and so forth. Also include a study of projected land use in surrounding areas.
5. The geology of the site to include mapping and examination of the faults in the siting area and determination of the acceptability of the foundation material.
6. Seismological design requirements for the power plant.
7. The hydrology of the proposed plant site to include analysis of dangers from storm runoffs, flash floods, and/or tidal waves.
8. The requirements for cooling waters to include studies of quantities of water necessary, inlet and outlet water temperatures, changes in the water quality such as increased salinity, and water availability in the present and future. If cooling towers or ponds are used, the source of make-up water and the effects of carry-over and blowdown water on surrounding areas must be included.
9. Meteorology of the proposed site to include wind velocity and directions, atmospheric stability, site diffusion, precipitation, temperature ranges, and air mass movements.
10. The aesthetic impact of the proposed plant upon the surrounding terrain and communities.
11. Potential effects upon air quality in the surrounding areas.
12. Noise levels and their impact upon the surrounding communities.

13. Environmental impacts to the surrounding flora and fauna both upon land and in the marine environment. Monitoring and studies of surrounding flora and fauna started prior to plant installation and continuing during plant operation are the most valid method for detecting unfavorable environmental impacts. Correction can then be made to remove these adverse effects.
14. Laws, regulations, and rulings of Federal, State, and local agencies with jurisdiction over the proposed plant site and over the surrounding communities affected by the operation of the power plant.
15. In the case where the proposed plant's operation will have effects upon environment of surrounding sites, consultation and coordination with the proper agencies of the affected state will be necessary.
16. The economic factors relating to the proposed plant's design and operation including the costs of installation of devices to protect the environment such as cooling towers, air filtering equipment, etc.

Other factors depending upon the proposed plant site, the plant design, and other conditions may appear and must also be considered. Mr. Fogarty did add a qualification that decisions concerning nuclear plant safety should remain with the Atomic Energy Commission. (*Special Hearing on Power Plant Siting Before the Assembly Committee on Planning and Land Use, November 18, 1971*, at 78, 80-82.)

10. In 1972, the California Senate Public Utilities and Corporations Committee held hearings similar to those which I conducted on power plant sitting focusing on: 1) energy demand forecasting; 2) methods for lowering demand; 3) coastal vs. inland siting of power plants; 4) the

appropriateness of various existing and proposed governmental agencies to site power plants; 5) selection among alternative types of generating technologies; 6) land use and environmental considerations; and 7) research and development of alternative energy technologies. (*Hearings on Power Plant Siting Before the Senate Public Utilities and Corporations Committee, February 10-11, 1972.*) In response to these concerns, two Senate bills, SB 1195 and 1310, were introduced in 1972 proposing the establishment of an Electrical Power Facilities Siting Council.

11. In September 1972, the Rand Corporation issued its report on California's electrical energy problems. The study had been commissioned in 1971 by the Assembly Committee on Planning and Land Use, to assist the Legislature in understanding the complex technical questions involved in developing a state electrical energy policy. The reports included: 1) *California Electricity Quandry* [*sic*] *I: Estimating Future Demand*, W.E. Mooz, *et al.*; 2) *California's Electricity Quandry* [*sic*] *II: Planning for Power Plant Siting*, R.H. Ball, *et al.*; 3) *California's Electricity Quandry* [*sic*] *III: Slowing the Growth Rate*, R.D. Doctor, *et al.* (R-1084-NSF/CSRA, R-1115-RF/CSA, R-I116-NSF/CSA, Rand Corp., Sept., 1972).

12. After Rand released the study, as Chairman of the Subcommittee on State Energy Policy of the Assembly Committee on Planning and Land Use, I supervised the drafting of four sets of interrogatories on specific findings of the Rand reports and on the broader questions of energy policy. We submitted these questions to five major California utilities, including SCE and PG&E, state agencies and environmental groups. Their responses are compiled in *Survey of Energy Problems and Programs*, Assembly Committee on Planning and Land Use, Subcommittee on State Energy Policy, June 1973. Again the interrogatories and

responses addressed concerns about energy demand forecasting, power plant siting, and energy conservation.

13. In answering these interrogatories, the utilities generally expressed their views that forecasting reponsibilities should remain with the utilities, and that certification responsibilities for new power plants should remain with the Public Utilities Commission. PG&E and SCE as well as other California utilities favored in addition the creation of a new state agency with jurisdiction to approve sites for new power plants. For example, PG&E stated:

> "Under the circumstances, we believe that the major opportunity for state action is in the area of improving power plant siting procedures so that siting may be better related to overall land use policies.
>
> * * * *
>
> "The decision for the siting agency still remains one of land use and environmental impact. The questions to be resolved at that time are whether the site proposed is the preferred site, whether there is reasonable assurance that the proposed construction will satisfy the environmental protection constraints, and whether the plant and transmission lines to transport the energy generated to the integrated transmission system are consistent with overall land-use planning." (Survey of Energy Problems and Programs, *supra*, at 295, 307).

Southern California Edison similarly expressed its view that:

> "One agency such as the Power Facility Siting Agency should have responsibility to coordinate siting procedures to obtain the best overall sites in terms of environmental, economic, and power supply considerations." (*Id.* at 243).

Although we focused most of the interrogatories on the division of authority between state and local agencies, the

utilities also expressed their views as to the division of responsibility between state and federal agencies in the nuclear area, by stating that the Atomic Energy Commission has jurisdiction over matters of nuclear plant safety. The utilities acknowledged the state's legitimate regulatory role in the licensing of nuclear power plants, and referred in numerous answers to their own applications for state certification of nuclear facilities which they had filed with the California Public Utilities Commission (e.g., Diablo Canyon, San Onofre, and Bodega Head).

14. In addition to obtaining written comments on interrogatories in these areas, my Energy Subcommittee held six days of hearings on state energy policy in February and March of 1973. These hearings focused on 1) California's electricity demand and supply characteristics, 2) the consequences of pursuing present policies relying heavily on nuclear power production, 3) reducing undesirable consequences of electrical energy use, 4) power plant siting and 5) review of AEC nuclear reactor safety criteria. (*Hearings on State Energy Policy*, before the Assembly Committee on Planning and Land Use, Subcommittee on State Energy Policy, February 15-16, 22-23; March 8-9, 1973.)

15. After extensive review and reflection on the information derived from these extensive studies and hearings, I proposed a comprehensive energy policy bill, Assembly Bill 1575, ultimately enacted as the Warren-Alquist Energy Resources Conservation and Development Act.

Senate Bill 283, incorporating AB 1575, passed both houses of the Legislature in 1973, but was vetoed by Governor Reagan. Later, following the oil embargo which occurred during the October 1973 mideast hostilities, we held further discussions with Governor Reagan with the result that Governor Reagan, his administration, PG&E, and SCE agreed to support AB 1575. Exhibit A to this affidavit is

a letter I signed shortly before passage of the bill which reflects this agreement. Exhibit B is a contemporaneous statement of support by investor-owned utilities, including PG&E and SCE. As a result of my discussions with Governor Reagan and the utilities, on May 16, 1974 the Legislature enacted the bill and Governor Reagan signed it on May 21.

16. Throughout the extended legislative process described above, I often expressed my concerns about the lack of credible state-wide demand forecasting, the absence of energy conservation and efficiency efforts, the irrational and complex power plant siting and licensing requirements, and the unavailability of opportunities to select among existing and future alternative electricity-generating technologies, and the absence of any significant public involvement in such decisions.

The four years of hearings and legislative studies culminated in a majority of the Legislature voicing similar concerns and adopting findings as follows:

— Electrical energy is essential to the health, safety and welfare of the people of California and that it is the responsibility of state government to ensure that a reliable supply of electrical energy is maintained at a level consistent with the need for such energy for the protection of the people's health and safety and for environmental quality protection.

— The present rapid rate of growth in demand for electrical energy is in part due to wasteful, uneconomic, inefficient and unnecessary use of power and a continuation of this trend will result in serious depletion or irreversible commitment of fuels, land and water resources and potential threats to California's environmental quality.

— Planning for future electrical generating and transmitting facilities should be coordinated with state, regional and local plans for land use, urban expansion, transportation systems, environmental protection and economic development.

— There is a pressing need to accelerate research and development into alternative sources of energy and to improve technology of design and siting of power facilities.

— Prevention of delays and interruptions in the orderly performance of electrical energy, protection of environmental values, and conservation of energy resources requires expanded authority and technical capability within state government:

Based on these findings, the Legislature declared that the policy of this state shall be:

— First: to establish and coordinate within state government responsibility for managing the state's energy resources, for encouraging and conducting research and development into energy supply and demand problems, and for regulating electrical generating and transmitting facilities;

— Second: to employ a range of measures to influence the rate of growth and electrical consumption in order to reduce wasteful, uneconomical and unnecessary uses, prudently conserve energy resources and assure state-wide environmental, public safety and land use goals.

17. With the passage of my proposed legislation, California had achieved a centralized energy planning and regulatory scheme which was widely acclaimed among energy planners and policy-makers. I intended that as part of its statutorily mandated planning and regulatory functions, the Energy Commission would consider the relative merits of various electrical generating alternatives, such as oil, coal,

solar, geothermal and nuclear. In considering the relative merits of various alternatives my legislation required the Commission to consider such factors as: (1) potential economic impact on the ratepaying public; (2) availability of the technology, including measures to deal with by-products of the technology, e.g., air pollution control equipment and waste disposal technology and facilities; (3) potential environmental impacts; (4) availability of necessary resources such as cooling water; (5) reliability of the technology; (6) land use impacts; (7) public health and safety impacts and (8) public acceptability of the technology.

I singled out no energy technology for special treatment in this legislation. I recognized that each of the conventional technologies, oil-fired plants, coal-fired plants, and nuclear power plants had its own set of promises and problems. We had only recently survived the oil embargo of the early 1970's, which jolted all of us into recognizing the dangers of overdependence upon foreign-produced oil. Federal policies affecting our reliance upon coal presented the state with conflicting directives which have still not been completely resolved. On the one hand, use of coal could reduce reliance upon imported oil, as coal is an abundant indigenous fuel source. Unfortunately, however, conventional coal facilities also produced serious air pollution impacts which could worsen California's already significant air pollution problems. The enactment and strict enforcement of air pollution standards in the early seventies served a necessary function, but also potentially constrained the rapid development of coal use in California. Finally, I was aware of serious economic and technological problems with the nuclear fuel cycle and the continuing concerns regarding nuclear safety. In addition, California's general geologic instability had prevented the siting of numerous nuclear power plants previously proposed by California utilities.

With all of these problems threatening the state's future energy resources, I realized that creative planning was essential. No longer would the conventional wisdom of the utilities provide us with satisfactory answers. The conventional options needed to continue to be explored, but highly promising alternatives such as geothermal, cogeneration, solar, and conservation of energy needed a much greater emphasis. I tried in my legislation to ensure that the state would have not only a sophisticated means of determining what its actual future energy needs might be, but also a mechanism to determine what supply alternatives could best be employed to meet those needs.

18. I understand and have been informed that the California Legislature continues to view with serious concern the issue of appropriate technology selection. Since 1974 the Legislature has investigated the problems and promises of conventional and alternative energy resources and has amended the original Warren-Alquist Act to reflect its determination that, for a variety of reasons including economics, reliability, and environmental concerns, certain technologies should be even more aggressively promoted; these technologies include geothermal, solar, and promising advanced clean-burning coal technologies, i.e., combined cycle plants burning gasified coal. These amendments appear as Public Resources Code sections 25540, 25601, and 25651.

While I was still serving in the Legislature, my Committee evaluated the economic and reliability uncertainties of the nuclear fuel cycle and determined that it would be prudent to await further development of the federal government's nuclear fuel cycle programs before finally certifying the siting of additional nuclear plants. I drafted these amendments which the Legislature enacted as Sections 25524.1,

25524.2, and 25524.3 of the California Public Resources Code.

19. In addition to our general concerns regarding energy policy and planning, I, and the majority of my colleagues in the California Legislature became increasingly concerned during the early 1970s about the use and development of nuclear power. These concerns became particularly acute when the Rand Study and the ensuing utility comments revealed the extent to which California utilities planned to rely upon nuclear power for future electricity generation, and the dramatic impact such heavy reliance would have on California's economy and environment.

For example, California utilities had planned to build 31 new large nuclear power plants by 1994, a growth in the use of nuclear power of 18% per year. To build these 31 plants would have required a six-fold increase in the rate of investment by utilities from $600 million to 4 billion per year by 1994, an investment which would also have required massive and unprecedented consumer rate increases. Those plans also would have lead to the consumption of as much as 340,000 acre-feet of increasingly scarce fresh water per year (an amount equivalent to ⅓ of the current output of the entire California Water Project. (*California's Nuclear Future*, a Staff Background Analysis, Assembly Committee on Resources, Land Use, and Energy, October 14, 1975).

20. In the Rand studies, the Energy Committee's *Survey of Energy Problems and Programs*, and in the hearings held in 1973, the Legislature obtained substantial information relating to the benefits and disadvantages of heavy reliance on nuclear power. The study and hearings revealed concern about the availability of uranium for fueling reactors; the economics of nuclear power; the water, land, and manpower requirements of a nuclear economy; the as-yet unsolved problems in the nuclear fuel cycle, particularly the lack of

spent-fuel reprocessing or waste disposal facilities; and the lack of [illegible]iable and certain method for decommissioning and dismantling a large-scale reactor in order to render the reactor site available for other land uses. Fears were also expressed that reactor safety problems could lead to an economically disastrous premature shutdown of previously licensed reactors or that such problems could lead to adverse public health or safety consequences. (*See also, California's Nuclear Future*, a Staff Background Analysis, Assembly Committee on Resources, Land Use, and Energy, October 14, 1975.)

Even though many members of the Legislature were concerned about certain unique problems of nuclear power identified above, we recognized that all energy sources have some disadvantages. We therefore included provisions in the legislature which would require the Energy Commission to consider the benefits and disadvantages of proposed power projects in its long-term planning and in individual licensing proceedings. The proposed legislation which was finally adopted did not single out or prohibit the licensing of new nuclear power plants in California. In our view, the past promises of nuclear power had not been definitively outweighed by its increasing uncertainties. I did intend in the proposed legislation to ensure that the Commission would specifically address certain troublesome issues which potentially affected the State's economy, the reliability of the state's electrical system, public health and safety, and the quality of California's environment. These provisions which apply to all power plant proposals are among the many challenged by the plaintiff utilities in this action.

I will briefly review each of the sections addressed in the case setting forth my understanding as the author of these provisions as to the reasons for their enactment.

* * *

The 1976 Laws

22. The public's growing interest in nuclear issues heightened sufficiently in the fall and winter of 1975-76 that enough signatures were gathered to qualify the California Nuclear Safeguards Initiative for the June 1976 general election. Because of the complexity of the issues involved and the intensity of public concern, the Assembly Committee on Resources, Land Use, and Energy, under my chairmanship, held 15 days of hearings to educate both the California public and its lawmakers on the initiative's implications. The Committee published full transcripts of these hearings prior to the June election. (*Hearings on Proposition 15 Before the California Assembly Committee on Resources, Land Use and Energy* (1975-76) ("Assembly Hearings").) The hearings provided a forum for the widest possible spectrum of views on the problems associated with the expanded use of nuclear power as well as those associated with passage of the initiative. At the conclusion of the hearings, the Committee offered no recommendation to the voters on Proposition 15, but instead I and thirteen of the fourteen members of the committee[1] coauthored three bills (Assembly Bills 2820, 2821 and 2822) to present the public with an alternative to the initiative.

22. The nuclear initiative, entitled the Nuclear Safeguards Act, proposed to the voters in 1976 a nuclear safety reassessment, comprised of three parts. First, the initiative required that the liability limits of the federal Price-Anderson Act be removed by the federal government or be waived by California utilities. If this were not accomplished on a specified timetable, nuclear facilities in Caliornia would be derated (forced to operate at lower levels of output)

---

[1]The one remaining member who did not join in authoring the legislation failed to attend even one day of the hearings.

according to a dictated schedule. The Initiative also required the California Legislature to assess the safety of the operation of nuclear reactors and the safety and existence of nuclear waste disposal after 1981. If the Legislature could not determine to its satisfaction that safe operation of reactors and safe waste disposal existed or would exist, existing reactors would be derated and no new reactors would be allowed.

As a result of study and hearings, the Committee's perspective focused on economics, supply and demand issues, and reliability of a future nuclear economy. (See, e.g., Committee Staff presentations, California's Nuclear Future, Hearings on Proposition 15, at 1-36.) The Committee viewed with concern the potential economic consequences of the Initiative's passage as well as the potential and economic reliability consequences of pursuing a heavily nuclear economy in this state. When the hearings concluded, we were convinced that the most serious concerns were related to the lack of certain necessary technology in the nuclear fuel cycle.

We believed that this technology gap posed serious problems for California's increasing reliance upon nuclear facilities. As long as the fuel cycle remained uncertain, questions regarding the availability and economics of waste disposal and the availability of uranium resources in the absence of reprocessing posed serious threats to the security of the electric supply system. Without adequate fuel for the reactors, and without any means of treating spent fuel either by reprocessing or by waste disposal, nuclear facilities might be shut down prior to the end of their useful lives, representing a scientific, technological, political and economic disaster. These uncertainties impressed the Committee as being of great importance in the state's choice among alternative generating technologies. For these reasons, the

Committee authorized new legislation requiring the Commission to follow developments in federal nuclear fuel cycle programs to determine when these uncertainties had been satisfactorily resolved. The legislation thus embodied some of the same concerns as the initiative, but its focus differed.

24. Our Assembly Committee Report, *Reassessment of Nuclear Energy in California, A Policy Analysis of Proposition 15 and Its Alternatives,* Assembly Committee on Resources, Land Use, and Energy, May 10, 1976, ("Reassessment") embodied this perspective as follows:

> "The bills are designed to provide a pause in the deployment of nuclear power plants until (1) certain stipulated problems which may 'clog' the nuclear fuel cycle are resolved (AB 2820 and AB 2822) and (2) a study is conducted to determine if an extra margin of safety can be feasibly attained by putting reactors underground (AB 2821)" (*Id.* at 154-155).

25. While the nuclear initiative was pending and the California Legislature was considering these laws in 1976, most major California utilities, including Pacific Gas and Electric Co. and Southern California Edison, supported their enactment. The Legislature subsequently enacted the bills as amendments to the Warren-Alquist Act, Public Resources Code Sections 25524.1, 25524.2, and 25524.3.

26. Public Resources Code section 25524.1 and 25524.2 address the status of the federal government's plans for reprocessing, storage and ultimate disposal of spent nuclear fuel and nuclear waste. These laws do not regulate the means by which a nuclear power reactor is constructed, designed, or operated; nor do they regulate the construction, design or operation of reprocessing plants or waste repositories. The laws recognize the federal government's responsibility for developing and approving reprocessing or waste technology by requiring the Energy Commission to look to de-

cisions of federal agencies in determining the status of reprocessing and waste disposal.

27. The Committee's nuclear hearings were replete with testimony regarding the problems in the nuclear fuel cycle. Although no reprocessing plants have ever been proposed for California, licensing and construction of the few reprocessing facilities in other parts of the country were far behind schedule, no reprocessing plants were in operation and the only U.S. reprocessing plant to have operated in the past was plagued by operations and maintenance problems. Cost estimates for reprocessing began to sky-rocket and many industry and government officials began questioning whether it was even worth attempting to salvage the reusable uranium through reprocessing. The federal government's program for nuclear waste disposal had experienced several set-backs and had produced no demonstrated method for disposing of the high-level radioactive wastes. Meanwhile, spent fuel from presently licensed and operating reactors continued to accumulate on-site, taxing the utilities' planned storage capacity and raising the prospect that reactors might be shut down because the spent fuel storage capacity was exhausted.

28. My Committee reported that certain problems with the nuclear fuel cycle were so widely acknowledged by the nuclear industry and the federal government that they could be classified as "stipulated problems":

1. No method for the disposal of nuclear wastes has been adopted.
2. Fuel reprocessing capacity is inadequate to handle the spent fuel from reactors soon to be in operation.
3. Fuel enrichment capacity will soon be exceeded.
4. Fuel cycle and construction costs have been increasing very rapidly for nuclear plants. (*Reassessment* at 2.)

All of these "stipulated" problems potentially affected the future economics and reliability of nuclear generated power.

29. Our committee thus reported its predominant concern for the reliability and economics of nuclear generated electricity. Without available enriched uranium at reasonable prices, nuclear power plants may not or perhaps should not become part of the energy supply on which California relies. Without a method for disposing of spent fuel either by recycle through reprocessing facilities or ultimate disposal, spent fuel storage capacity at reactor sites may soon be exceeded with possible premature, economically disastrous closure of already licensed and operating nuclear power plants. Overall, this concern for the costs of nuclear power is primarily an economic one, the Legislature's clearly expressed desire to protect the rate paying consumer from a possibly overly-expensive energy generation alternative.

30. The hearings, the Committee's Reassessment Report, and the nuclear laws themselves show that the California Legislature recognized the federal government's authority and responsibility for solving these unique nuclear fuel cycle problems. The reprocessing and waste disposal laws do not in any way purport to dictate the method of reprocessing or waste disposal used, nor do they in any way purport to regulate the construction, design, or operation of reprocessing or waste disposal facilities. They merely recognize the federal government's authority and responsibility to solve these problems, and establish their solution as a predicate to the certification of new nuclear reactors in California. Thus, having previously established an energy planning and policy scheme, the state Legislature now factored into the state's choice among alternative technologies the economic and reliability uncertainties which we discovered to be associated with the nuclear fuel cycle.

31. The Committee heard testimony on the constitutional questions arising from the Nuclear Safeguards Initiative. The Reassessment Report indicates that the Legislature was aware of constitutional questions and restraints when the nuclear laws were drafted and that the Legislature intended to enact laws which were within permissible constitutional bounds.

* * *

I declare under penalty of perjury that the foregoing is true and correct as to the best of my knowledge.

Executed at Sacramento, California on October 22, 1979.

/s/ Charles H. Warren
Charles H. Warren

EXHIBIT A.

[Letterhead]

May 7,1974

Members of the Senate
State Capitol
Sacramento, California

Dear Colleague:

The State Energy Resources Conservation and Development Act (AB 1575) was reported out of the Finance Committee favorably on May 1, and will shortly be considered on the Senate floor. The bill is now supported by:

Honorable Ronald Reagan, Governor
Honorable Houston I. Flournoy, Controller
Honorable Evelle J. Younger, Attorney General
Honorable Tom Bradley, Mayor of Los Angeles
City Council of Los Angeles
Pacific Gas and Electric Company
Southern California Edison Company
San Diego Gas and Electric Company
Los Angeles Department of Water and Power
California Municipal Utilities Association
AFL-CIO
Sierra Club
Planning and Conservation League
Assembly Science & Technology Council, Panel on Energy Planning Programs
Lester Lees, Director of Environmental Quality Lab, California Institute of Technology and Chairman of the Lieutenant Governor's Energy Workshop
James H. Krieger, Co-chairman of the Lieutenant Governor's Energy Workshop

Supporting editorials have also been published in the Los Angeles Times and the McClatchy Newspapers and deliv-

ered by KABC-TV in Los Angeles. Recent editorials from the San Jose Mercury and the Los Angeles Times are attached for your consideration.

A number of questions have consistently been raised about provisions of this bill concerning applicance efficiency standards and the preemption of local jurisdictions involved in powerplant siting decisions. These issues were considered fully in the Assembly and have been dealt with in both the Public Utilities and Corporations Committee and the Finance Committee of the Senate.

To give you the benefit of much of this prior discussion, two brief papers are attached which summarize the main points of each dispute.

We hope you will find this information of value and urge your favorable consideration of this bill.

Best regards,

/s/ Al
ALFRED ALQUIST

/s/ Charles
CHARLES WARREN

AA:CW:vlg
Enclosures

EXHIBIT B.

STATEMENT BY INVESTOR OWNED ELECTRIC UTILITIES ON A.B. 1575

AB 1575 is the result of serious effort by Mr. Warren, the Governor, and the utilities to reach accommodations with respect to those features of SB 283, which passed this Legislature last year and was vetoed, which we felt would have made it impossible to construct major new electric facilities in time to serve our customers. The bill now holds promise for expediting the process of siting major power plants and related facilities while at the same time giving due consideration to environmental concerns and the importance of public participation. Although there may be specific provisions in the bill with which one person or another might find fault, we believe that it represents a reasonable compromise and is now a workable bill. Taken by its four corners as a document which is the result of negotiations seeking to represent more than one legitimate interest, we believe it deserves support.

April 25, 1974

7. Declaration of Emilio E. Varanini, III, Dated October 25, 1979 (Filed October 29, 1979 in the District Court in Opposition to Plaintiffs' Motion for Summary Judgment).

United States District Court for the Eastern District of California.

[Case omitted in printing.]

DECLARATION OF
EMILIO E. VARANINI, III

I, Emilio E. Varanini, III, declare:

All of the matters stated herein are known to me of my personal knowledge, or (where indicated) of my professional opinion based on my personal qualifications, experience, and studies; and if called as a witness I would testify as follows:

1. Prior to my appointment to the Energy Commission, I served as Consultant to the Assembly Committee on Resources, Land Use, and Energy (formerly, Assembly Committee on Planning and Land Use) from January 1, 1971 to July, 1976. Extensive Committee investigations prior to 1975 of California's energy policy concerns and of the appropriate development of nuclear power led then-Chairman of a subcommittee of the Assembly Planning and Land Use Committee, Charles Warren, to author the enabling legislation creating the California Energy Commission.

2. I am presently a Commissioner on the California Energy Resources Conservation and Development Commission (hereafter, "Energy Commission" or "Commission"). I am a member of the California Bar and I was appointed to the Commission by Governor Edmund G. Brown, Jr. in July, 1976, to serve as the Commission's

lawyer-member.[1] I have been appointed to a second term which expires on January 6, 1983. Among my duties at the Energy Commission, I sit on the Commission's Committee on Power Plant Regulations, which conducts all rulemakings to consider and promulgate rules implementing the siting provisions of the Warren-Alquist Act, including those which are challenged in this action. I was one of the two members of the Commission Committee which heard testimony in the Sundesert Nuclear Project Notice of Intent and which prepared the proposed decision for the Commission's consideration prior to its approval of the Sundesert NOI. I am also the presiding member of the Energy Commission's Nuclear Fuel Cycle Committee which is reponsible for implementing California Public Resources Code sections 25524.1, 25524.2, and 25524.3, three of the laws plaintiffs challenge in this action. As such, I am personally familiar with all Commission investigations, decisions, and actions pursuant to the challenged Warren-Alquist Act provisions.

3. I have also served on federal panels, have testified before Congress, and have participated in and addressed numerous conferences on energy matters generally and nuclear matters specifically. As presiding member of the Energy Commission's Nuclear Fuel Cycle Committee, I have frequent meetings and communications with federal officials involved with fuel cycle programs and I have visited several of the national science laboratories for additional discussions. This background and the Sundesert and Fuel Cycle Committee's intensive study of federal regulations, policies

---

[1]Under California Public Resources Code Section 25201, three other members of the Energy Commission must be qualified in engineering, economics, and environmental matters, and the fifth member is appointed from the public at large.

and programs provide me with a general understanding of the federal energy and nuclear regulation systems.

* * *

Energy Commission & Implementation of Sections 25524.1 & 25524.2

9. The Energy Commission's on-going activities implementing the fuel cycle laws now focus on Section 25524.2, the nuclear waste disposal section. As discussed below, present federal policy on the nuclear fuel cycle necessitates this perspective. The Commission has completed its investigation of undergrounding and berm containment and has determined not to require these measures; therefore, activities pursuant to section 25524.3 have ceased.

10. Because of the extensive nature of the investigations required by the waste disposal and reprocessing provisions, the Energy Commission delegated authority to the Nuclear Fuel Cycle Committee to conduct studies, hold hearings, and prepare advisory reports on the progress of the investigation. Pursuant to this delegation, the Committee is engaged in wide range of activities including holding numerous hearings and informal workshops, reviewing all relevant technical studies and documents, reviewing federal programs, policy statements, and decisions regarding reprocessing and waste disposal, meeting with federal officials and technicians actually working on reprocessing and waste disposal programs at various national laboratories, and participating in federal fuel cycle proceedings, attending national and international conferences and workshops on waste disposal reprocessing.

11. From time to time the Committee prepares reports designed to advise the public, the Legislature, and the utilities on the present status of waste disposal and reprocessing. Two such reports have been issued thus far, an interim

report in July, 1977 and a second status report in January 1978. A copy of the second report has been filed as Appendix B to the Plaintiff's Memorandum of Points and Authorities in support of their motion for summary judgment. The Commission issued the first report on its own initiative. The Legislature enacted a law, Public Resources Code Section 25524.25, (introduced as AB 1852), requiring a second status report, for the Legislature's use in determining whether to exempt San Diego Gas and Electric's proposed Sundesert Nuclear Project from the conditions of the waste disposal and reprocessing provisions.

12. Pursuant to Public Resources Code Section 25524.25, the Commission issued its January report on the nuclear laws advising the Legislature that the reprocessing condition had been rendered moot by federal actions, and that the finding on the availability of waste disposal could not yet be made. The Commission subsequently found that while additional power was needed in Southern California, it could be supplied by economical and environmental alternatives to the Sundesert Project. Thus, the Commission recommended no Sundesert exemption and the Legislature followed the Commission's advice by failing to exempt the project.

13. The Committee's January 1978 advisory report contained the Committee's interpretation of key terms in the waste disposal and reprocessing sections. During the Committee's hearings, the California utilities and nuclear industry submitted written statements and presented oral testimony that certain terms in the statues [*sic*] were ambiguous, but also vigorously disagreeing with the Committee's proposed interpretation of those terms. (*See Statement of the California Electric Utilities and Nuclear Industry Before the Energy Resources Conservation and Development Commission*, January 24, 1978; and *Petition for Reconsideration*

in the Matter of Implementation of Nuclear Reprocessing and Waste Disposal Statutes, February 24, 1978, by PG&E, Southern California Edison, and Los Angeles Department of Water and Power. The utilities' position throughout the fuel cycle proceedings had been that the fuel cycle laws posed no obstacle to the licensing of future nuclear powerplants since the requirements in the reprocessing and waste disposal provisions had already been satisfied. They argued that the Nuclear Fuel Cycle Committee had improperly interpreted the nuclear laws, and that if the Commission corrected its interpretation, the Commission could make affirmative findings on the waste disposal and reprocessing requirements. The Commission rejected the utilities' arguments and denied the petition for reconsideration.

14. The Affidavit of Barton W. Shackelford filed by plaintiffs in support of their motion for summary judgment at ¶11 and the Affidavit of David J. Fogarty at ¶12 refer to the Fuel Cycle Committee's Report as requiring the utilities to construct nuclear plants with spent fuel storage capacity "for 50 years after plant shutdown all the spent fuel resulting from the expected 40-year operating life of the plant, in addition to capacity to store, at any given time, all fuel required to load the plant." The Fuel Cycle Committee's Report *required no such storage capacity*. The Committee reviewed the serious lack of capacity problems related to spent fuel storage and suggested that the adoption of such a policy would "result in a lessening of the threat to continued operations and an ability to make the affirmative findings on a case-by-case basis under section 25524.1(b)." (Status of Nuclear Fuel Reprocessing Spent Fuel Storage and High-Level Waste Disposal, Draft Report on the Nuclear Fuel Cycle Committee, January 11, 1978, at 113.)

That recommendation was *not* adopted by the full Commission in its advisory decision adopted on January 25. The only reference in the entire decision to spent fuel storage is that "Under section 25524.1(b) the Commission will, on a case-by-case basis review carefully the spent fuel storage capacity at individual reactor sites." (Decision of the California Energy Resources Conservation and development Commission in the matter of Implementation of Nuclear Reprocessing and Waste Disposal Statutes, 76-NL-1, 76-NL-3, January 25, 1979, at 5.)

15. The Commission's activities since January 1978 have focused on waste disposal rather than reprocessing because federal policy on reprocessing has dramatically shifted since the laws were enacted in 1976. In 1976 the federal nucler fuel cycle program was premised on reprocessing of spent fuel. On April 7, 1977, however, President Carter announced the indefinite suspension of all United States activities associated with reprocessing. This position was necessary, he said, because the nuclear weapons proliferation concerns spawned by wide-spread reprocessing of nuclear fuel outweighed any possible economic advantages of reprocessing. The Nuclear Regulatory Commission followed the President's directive and has subsequently terminated all licensing and rulemaking proceedings involving reprocessing. Since Section 25524.1(a) states that the reprocessing technology finding applies only to "nuclear fission thermal power plants requiring the reprocessing of fuel rods," the Energy Commission has determined that the requirement for a finding on reprocessing is no longer applicable. Federal policy not only does not require reprocesing, [*sic*] it now prohibits reprocessing. Thus, the Committee is focusing its remaining attention on the waste disposal section, 25524.2.

16. The Committee is continuing its review of the federal government's increasing activities in the nuclear waste management area. The Committee reviewed and commented on the draft report of the Federal Interagency Review Group for Nuclear Waste Management. The group's final report and recommendations on nuclear waste management policies and plans have been presented to President Carter for his own policy formulation. The President has not yet adopted any of the recommendations, and I understand that he is not likely to do so until after the Presidential Kemeney Commission investigating the Three-Mile Island accident has issued its report later this month.

On the issue of linking further nuclear energy development to a satisfactory resolution of the nuclear waste disposal problem, the Interagency Review Group remained neutral since its members had so decisively split on this question. The IRG further reports that the NRC in commenting on the draft stated that while the Atomic Energy Act did not legally impose a conditional relationship between further powerplant licensing and satisfactory waste disposal, that the NRC would nonetheless terminate the licensing of reactors if it did not continue to have reasonable confidence that nuclear wastes can and will be disposed of satisfactorily.

The Committee is following NRC's development of a rulemaking proceeding in which the NRC will investigate that very question, whether the NRC does in fact continue to have confidence that nuclear wastes can and will be disposed of safely. I understand that the NRC will initiate this proceeding shortly, in response to a remand from the District of Columbia Circuit Court of Appeals requiring the NRC to conduct some sort of proceeding to produce a record reassessing NRC's confidence in the future availability of waste disposal. In addition, I have attended a number of

workshops and conferences to present California's views on the participation of the states in nuclear waste management.

17. Other federal developments relevant to the findings in the waste disposal section presently under review include the emerging EPA criteria for waste disposal and NRC's draft licensing criteria for a high level waste disposal repository. The Commission intends to continue its efforts in this area, to prepare further status reports, and to hold additional hearings when warranted by the acquisition of substantial new information. I must emphasize, however, that up to and at the present time no waste disposal repository has been proposed for California nor is such a proposal likely to appear, given California's relatively unsuitable geology.

* * *

I declare under penalty of perjury that the foreging is true and correct.

Executed at Sacramento, California on October 25, 1979.

/s/ Emilio E. Varanini, III,
Emilio E. Varanini, III

8. Affidavit of Dale G. Bridenbaugh, Dated October 26, 1979 (Filed October 29, 1979 in the District Court in Opposition to Plaintiffs' Motion for Summary Judgment).

United States District Court for the Eastern District of California.

[Case omitted in printing.]

AFFIDAVIT OF DALE G. BRIDENBAUGH

State of California County of Santa Clara — ss.

DALE G. BRIDENBAUGH, being duly sworn, deposes and says as follows:

1. I am a Professional Nuclear Engineer, technical consultant, and a founder and partner of MHB Technical Associates, technical consultants on energy and environment, with offices at 1723 Hamilton Avenue, Suite K, San Jose, California. I have participated as an expert witness in licensing proceedings before the U.S. Nuclear Regulatory Commission (NRC); have served as a consultant to the NRC; have testified at the request of the Advisory Committee on Reactor Safeguards; have appeared before various committees of the U.S. Congress and testified in various state licensing and regulatory proceedings, as is further discussed below. I am familiar with the operations and organization of Southern California Edison and Pacific Gas & Electric Company by way of close association with each utility in my previous employment by General Electric Company. I am also familiar with the Warren-Alquist Act and organization of the California Energy Commission, with the three "nuclear bills" passed by the California State Legislature in 1976, and have been informed as to the nature of the issues in this civil action. This affidavit is submitted in

conjunction with defendants' opposition to Plaintiffs' motion for summary judgment herein.

2. I am a graduate engineer thoroughly familiar with the design, construction, and operation of nuclear generating plants, including operational errors, equipment and system failures, and other problems that could lead to adverse safety and reliability consequences. I received a B.S. in Mechanical Engineering from the South Dakota School of Mines and Technology in 1953, and have since been registered in the state of California as a Professional Nuclear Engineer.

3. For approximately twenty-two years, until February 1976, I worked as an engineer and manager with the General Electric Company on a wide variety of most aspects of power generation equipment design, manufacture, installation, and operation. During the last ten of those twenty-two years, I held management positions in the area of construction, operation, maintenance, and evaluation of nuclear power plants. My responsibilities included the development of cost estimates, schedules, and plans associated with the operation of those plants. Substantial effort was spent on resolution of problems affecting plant performance including primary system, containment, fuel, fuel storage pool leaks, fuel handling problems, and other portions of the plant and equipment.

4. Since the fall of 1976, I have been a partner and consultant with MHB Technical Associates. In this capacity I have analyzed reactor safety as a consultant to the Union of Concerned Scientists in a study of the Nuclear Regulatory Commission's Reactor Safety Study, WASH-1400 (the "Rasmussen Report"). Following completion of this study, my firm was engaged by the Swedish Energy Commission to perform a detailed risk analysis of the Barseback Swedish

nuclear plant. This study was completed and presented to the Government of Sweden in April, 1978.

5. In 1978, I was retained as a consultant by the U.S. Nuclear Regulatory Commission to review the Light Water Reactor (LWR) Safety Improvement Plan. In 1979, I have performed, along with my two partners, a major study for the U.S. Department of Energy, through the Sandia Corporation, to further define safety improvement programs for light water reactors.

6. I have read the Complaint in this action and am generally familiar with the Plaintiffs' allegations and the arguments advanced in Plaintiffs' memorandum supporting their motion for summary judgment. Based on my own professional experience as an expert witness and consultant in both federal and state licensing proceedings, this affidavit explains how technical matters considered by the Nuclear Regulatory Commission strictly for health and safety reasons, also have a direct bearing on the concern of a state, like California, that power plants be both economical and reliable for state energy planning purposes.

7. The purpose of federal regulation by the NRC is to protect the public health and safety, (except when defense and security matters are involved; none are in this affidavit). NRC regulation is narrowly confined to the protection of public health and safety; in my experience, the NRC is required by law to be concerned with whether a plant or system is safe, not with the cost of making it so. State regulation of the design, construction, and operation of nuclear power plants is concerned with the cost to the ratepayer of providing electricity from the plant; the state is concerned with overall system reliability in delivery of power so that adequate reserves are available to meet demand.

8. The plan for a nuclear power plant involves an enormous mass of complex technical data requiring years of preparation. Evaluation of the technical intricacies of the design, construction and operation plan can be made only by technical matters, disclosure of the same mass of technical information can be made to the NRC for determination of public health and safety purposes (to determine, in essence; Is the system safe? Is the public health adequately protected?) and the same data submitted to state review, *e.g.*, by the California Energy Commission under provisions of the Warren-Alquist Act for economic and system reliability purposes (to determine, in essence; Do the people of California need this plant? What is the cost as compared to alternative energy sources? Will the system operate reliably over projected lifetime to provide a dependable power resource for the State?)

9. I submit this affidavit to identify some of the more significant technical areas subject to coordinated review by the California Energy Commission for economic and system reliability for energy supply planning purposes.

[I. *Economic Consideration, Reliability of Nuclear Power Plants, Measurement of Plant Performance*]

10. Economic considerations are significant factors and often decisive in a state's decision to approve one power source and site for a power plant over alternative technologies and sites. If initial cost projections by a utility for a nuclear plant could be relied upon in that decision, the state's selection of the most economical generating resource could be made by simply comparing the utility's cost projection for a nuclear plant with other cost projections for alternative technologies. But utility cost projections for nuclear plants are not reliable, and independent state review of the cost is necessary. For example, the original cost

projections of Plaintiffs in this case on earlier nuclear plants are from ⅓ (San Onofre) to ⅕ (Diablo Canyon) of actual construction costs. In practice, cost projections for nuclear plants are subject to great uncertainty arising from (1) rapid rate escalation in cost of building nuclear plants which far exceeds the rate of inflation; (2) failure to consider all relevant costs in projections, especially cost to decommission a plant, currently projected at about 10% of construction cost; and cost of disposal of high and low-level waste; (3) contingencies inherent in nuclear plants, such as cost increases resulting from enforcement of NRC safety regulations, and cleanup costs incurred after accidents. The California Energy Commission, in exercise of authority under the Warren-Alquist Act, should consider these economic aspects in evaluating nuclear power with alternative technologies. The NRC makes no such broad economic evaluation of a proposed plant.

[II. *Measurement of Performance of a Nuclear Power Plant*]

11. The performance of a power plant throughout its operating lifetime has a very significant impact upon the cost and reliability of the power to be supplied by the power plant. Numerous factors can be calculated to describe plant operating efficiency (performance), but the three most common factors used to express overall plant performance are (1) availability, (2) forced outrage rate and (3) capacity factor.

a. The availability of a power plant is expressed as a percentage of the time in a given period (usually a year), that a plant is capable of being operated, whether or not it is actually in operation. In the availability calculation, the only criterion is that the plant can be operated. Thus, actual

power generation is not taken into account in determining "availability."

b. The forced outrage rate of a plant is the percentage of time that the plant is required to be shutdown for unscheduled maintenance or repairs. In determining whether or not a repair outage is "scheduled," an outage is considered "forced" if it cannot be delayed beyond the weekend immediately following the first indication of a problem.

c. The capacity factor of a plant is the percentage expression of the power produced by a plant during a given time period compared to the amount of power that could have been produced had the plant operated at full-rated power 100% of the period time. For mature power plants (those in operation approximately 3 or more years), capacity factors usually run 10 to 15% less than availability factors.

12. All three factors have their own purpose. Availability and forced outage rates are most useful to equipment designers in performing reliability or safety evaluations. They are also important in evaluating the adequacy of a utility system's reserve margin. For estimating the cost of power generated by a given plant, capacity factor is the most meaningful term, playing an essential part in the calculation.

13. In the past, U.S. utilities have planned on capacity factors in the 70 to 80% range, or higher. For example, in PG&E's first submittal to the PUC on Diablo Canyon, power generation costs based on 90% capacity factor were used, However, nuclear plants have generally been operating in the 50 to 60% range. This lower-than-expected capacity factor seriously affects the actual power generation costs, degrades the reliability of the power generation system, and imposes additional requirements on the reserve margin required to make the total power system reliable.

[III. *Economic Effect of Nuclear Plant Performance; Analysis of Factors Related to Reliability Under California Public Resources Code 25511*]

14. The effect of lower capacity is to increase the cost of power. The cost increase is particularly significant on high-capital-cost nuclear plants, where the fixed charges are high. Lower capacity explains some of the large cost increases seen in nuclear power generation in recent years. Based on the past performance of large light water reactors, it appears that 50 to 60% capacity factor is the most that can be expected for the first 10 to 15 years of operation. Projections beyond 15 years are extremely speculative, as there is little or no actual operating experience with units of this age. Poor performance of some older plants indicates that aging effects and increased radiation levels with [*sic*] the plants may well force a significant downward trend in capacity.

15. One of the most complete assessments of power plant performance was performed by Charles Komanoff of Komanoff Energy Associates. His report, *Nuclear Plant Performance Update No. 2, Data Through December 1977*, concludes that large pressurized water reactors cannot be expected to produce capacity factors of greater than approximately 59% over the early years of operation with boiling water reactors projected at an even lower value of approximately 50%. Mature forms of power generation generally improve with age, but it has not seemed to work out that way for nuclear facilities. The primary reason seems to be that aging effect on the plant's reliability, coupled with the problem of increasing radiation levels, making maintenance difficult, if not impossible in some cases, compounds the outage time as the plants get older. In addition, because of the changing safety standards and difficulty in maintaining radioactive components, there is some indica-

tion that nuclear plants may not be able to achieve the design life anticipated. For example, two of the earliest plants in operation in the U.S., Indian Point-1 and Humboldt Bay-3, have both been removed from service for the past several years due to inability to meet current safety standards. It is most likely that these plants will never operate again.

16. Several pressurized water reactors in the U.S. (Turkey Point, Surry, Palisades, North Anna) are facing extensive outages of a year or more due to the necessity for the replacement of leaking and radioactive steam generators. A similar steam generator problem at the Mihama plant in Japan has resulted in its being out of service for the past four years. The impact of these types of problems is further complicated by the growing pressure to reduce allowable occupational radiation exposure limits in nuclear plants. A reduction in occupational limits by a factor of 10, as is currently being considered, may result in an even earlier shutdown of a number of currently operating reactors.

17. The effect of reduced capacity factor on power generation costs is relatively easily calculated. The following table shows the result of operating at capacity factors of 80%, 65%, and 50% on a plant typical of those expected for operation in the mid-80's. The plant is assumed to have a total capital cost of $1.9 billion, a fixed charge rate of 15%, and a rating of 1180 MW.

Capacity Factor	Capital Cost Mills/KWhr	Levelized Fuel Cost (assumed) Mills/KWhr	O&M Cost (assumed) Mills/KWhr	Total Cost Mills/KWhr
80%	34.5	12.6	4.0	51.1
65%	42.4	12.6	4.0	59.0
50%	55.1	12.6	4.0	71.7

18. A decrease of capacity factor from 80% to 50% results in a 40% increase in power generation cost, assuming

other costs remain constant. A cost increase factor not quantified in this calculation is that if the capacity factor is lower than anticipated, there would be a need for more power reserve in the system. In addition, if plant life is foreshortened, there would be an earlier need for more expensive replacement generating stations to make up for loss of generation capacity brought about by the early shutdown of nuclear facilities.

19. The calculation of the effect of early plant shutdown is relatively simple to approximate, but how it would be handled financially is more difficult. In simplistic terms, if a plant's actual useful life is, for example, 80% of design, the entire plant cost must be written off over 20% fewer kilowatt-hours of production. Thus, if a 65% capacity factor is assumed for a plant operating to only 80% of expected life, instead of a capital cost factor of 42.4 mills per kilowatt hours, there would be an increase of the capital cost factor by (42.4 ÷ 0.8) - 42.4, or 10.6 mills per kilowatt hours, thus raising the actual power cost to approximately 70 mills per kilowatt-hour. If such an early shutdown happened unexpectedly, the financial impact of a large cost write-off in one year would be difficult for any utility to manage.

[IV. *System Reliability for Energy Planning Purposes; Outages*]

20. The performance of a nuclear power plant (also any other power plant) can be degraded by outages (inability to operate the plant) or by derating (inability to operate the plant at full rating). Outages occur because of serious equipment failure, the need to shutdown for maintenance, inspection, or refueling, or because of the fact of unsafe conditions making continued plant operation inadvisable. Deratings usually occur as a result of equipment failure or less-than-expected design performance of some portion of

the system which limits the power level at which the plant can operate. For example, years ago, PG&E's Humboldt Bay-3 plant operated at less than design rating because of higher-than-expected failure rates in the stainless steel cladding of the nuclear fuel than in use at that plant. Derating was required in order to keep the emission of radioactive gases from the off-gas system below the license limit of the plant.

21. Plant outages can generally be divided into two categories, scheduled and unscheduled. Scheduled outages are expected and predictable and can be planned by the utility to coincide with decreased periods of electrical demand. For example, every nuclear power plant is required to shut down approximately annually for removal of a portion of the expended nuclear fuel and for the installation of new fuel in order to permit it to continue operating he next period of time. During this annual refueling outage, the utility attempts to perform as much as possible of the required maintenance and inspection work so as to mizimize [*sic*] the operating time power generation between refueling outages and to minimize the unscheduled outages required for unanticipated equipment failures or modifications. Nuclear plant operators expect to devote approximately four to ten weeks per year to scheduled refueling and maintenance outages with the goal of minimizing unscheduled outages to as near zero as possible. The zero goal is never attainable and, in fact, the typical nuclear plant unscheduled outage time usually exceeds the scheduled outage time. Extended unscheduled outage periods are generally brought about by serious equipment failures, system deficiencies, or changes in the state of the art or NRC requirements. Such major plant modifications require extensive periods of time to complete and the fact that much of the equipment is

radioactive further complicates the repair or modifications procedures. Following are examples that illustrate these different causes of unscheduled outages:

[V. *Outages Resulting From Equipment or System Failure*]

i) SMUD's Rancho Seco plant near Sacramento had extended outages in the 1975-76 years, most of which were due to turbine and turbine-generator failures. Rancho Seco's lifetime capacity factor through the year 1977 was only 50.5%

ii) Southern Cal Edison's San Onofre Unit 1 had to extend the planned refueling outage (the unplanned extension of a scheduled outage is called a forced outage) several weeks in 1979 due to cracks being discovered in the steam generator feedwater lines.

iii) The 1975 fire experienced at TVA's Browns Ferry plant resulted in an outage of approximately 18 months. The susceptibility of the complicated control systems to common-mode failures such as fire represents a particularly significant risk to nuclear plant reliability and safety.

iv) VEPCO's Surry-2 nuclear unit is currently shutdown for the complete replacement of the nuclear system steam generators. This was required due to excessive tube failures in the steam generators. This task will take approximately one year to complete and will cost on the order of $50 million, excluding replacement power costs.

v) Iowa Electric Light and Power's Duane Arnold plant was out of service for approximately 9 months starting mid-1978 due to failures (cracking) of nuclear system piping and the required replacement of these critical components. The cracks were discovered as a

result of a routine check following an unexpected shutdown of the plant and occurred just prior to the summertime load peak for the utility.

[VI. *Outages Resulting From Enforcement of NRC Safety Requirements*]

i) PG&E's Humboldt Bay-3 plant was shutdown in July 1976 in order to complete some planned seismic modifications. While the plant was shutdown, failures of reactor internals were found and subsequently repaired, but the plant has been prohibited from being returned to service due to the discovery of new seismic faults at the plant site. An NRC order prevents the plant from returning to operation until the seismic review is complete and necessary modifications are made (if possible).

ii) Southern Cal Edison's San Onofre Unit 1 plant was shutdown for approximately 6 months starting in the fall of 1976. This shutdown for installation of a secondary containment was necessary to reduce calculated post-accident radiation doses. This new structure reportedly cost Southern Cal Edison (and presumably its ratepayers) in excess of $30 million, in addition to the makeup power costs.

iii) PG&E's Diablo Canyon plant has been unable to commence initial operation for several years beyond the scheduled start-up date due to the new discovery of earthquake faults and the subsequent need to upgrade the plant seismic design. The NRC's ongoing review of the adequacy of the plant to withstand the seismic loadings that could occur continues.

[VII. *Outages Resulting From Generic Shutdown Orders Issued by the NRC*]

From time to time, the NRC or the equipment designers or utilities discover generic deficiencies which require that a closing of all plants potentially involved be ordered. The following are three of the more significant that have occurred recently:

i) In early 1975, the NRC ordered all boiling water reactors (plants built by the General Electric Company) shut down within 30 days to conduct extensive inspections of nuclear system piping because of the discovery of cracks at a number of boiling water reactor plants. This generic shutdown took almost half of the U.S. nuclear capacity out of service for two to four weeks.

ii) In March 1979, it was discovered that the computer codes used to perform the seismic analysis of critical piping systems by Stone & Webster was deficient. The NRC ordered the immediate shutdown of five nuclear plants, Maine Yankee, Beaver Valley, Fitzpatrick, Surry-1 and Surry-2. The Fitzpatrick plant did not start up until September 7, 1979 and the Surry-2 plant remains down for steam generator replacement.

iii) Following the Three Mile Island-2 accident in March, 1979, the NRC subsequently ordered the shutdown and modifications of all other plants manufactured by Babcock & Wilcox. These included Rancho Seco, Three Mile Island-1, Arkansas Nuclear One, Crystal River, Oconee-1, 2, & 3, and Davis Besse. All units have subsequently returned to service with the exception of Three Mile Island-1 and, of course, Three Mile Island-2. Three Mile Island-1 will receive a complete NRC review which is currently scheduled to take

approximately one year. Three Mile Island-2 is currently scheduled to take several years to return to service if operation is possible at all.

22. The impact of extended outages on long-term system energy planning could be disastrous. With a design/construction time cycle of ten to twelve years for a nuclear plant, the loss, perhaps permanently, of a block of power as large as is represented by the Three Mile Island plant could cause both short and long-term consequences to the area's ability to plan for and achieve a reliable power supply.

23. It is therefore vitally important from the stand-point of energy supply planning to recognize that a power plant's reliability is directly affected by its susceptibility to lengthy, unscheduled outages caused by events such as:

a. Equipment or system failure,
b. Failures by means of external causes, *i.e.*, fire, storm, earthquake, explosions, or sabotage,
c. System or equipment design errors,
d. The need to meet more stringent safety requirements, and
e. Recovery from accidents and subsequent repair and modification.

For plants proposed to be located in California, the only method by which the California Energy Commission can make an economic and reliability analysis of these events for energy supply system purposes is by full disclosure by the applicant and analysis by qualified experts of technical information now required to be furnished by provisions of the Warren-Alquist Act, which may, and often will be, the same technical information the applicant may be required to furnish to the NRC for safety analysis.

[VIII. *Public Resources Code Section 25511*]

24. With regard to the specific language of Public Resources Code Section 25511, the following is just one example of how information required to be furnished under that section would be the basis for economic and reliability analysis of the proposed power plant. PRC Section 25511 requires the applicant to furnish the California Energy Commission with "detailed information on . . . . . plans for transport, handling and storage of waste and fuels . . . . ."

25. The ability to transport the high, intermediate, and low-level radioactive waste produced as a by-product of plant operation can be a critical factor in assuring the operating reliability of a nuclear plant. In one current licensing proceeding, the Shoreham plant being built by the Long Island Lighting Company, the transport of high-level waste from the Shoreham plant, located on Long Island, through the City of New York is an issue of vital concern to the state. In recent decisions announced by the respective governors, both the states of Nevada and Washington have closed their borders to further transport of radioactive waste to the Beatty and Hanford storage facilities located within the states. Of the three recently operating waste facilities in the U.S., only one, located in South Carolina, is still open to receive waste. Unless an applicant utility can establish that a plan exists for transportation of wastes and fuels that complies with NRC, Department of Transportation, and related state guidelines, the utility is not able to assure that the proposed plant can operate either economically or reliably.

26. Until 1974, it was fully intended within the nuclear industry that spent fuel discharged from nuclear reactors would be commercially reprocessed in privately-owned re-

processing facilities. This was to have been a step in the ultimate disposal of the high-level radioactive waste with the high-level waste product from the reprocessing plants to be turned over to the federal government within five years after separation. In 1977, the U.S. Government ruled that reprocessing of spent fuel would not be in the best interest of the United States due to the weapons proliferation hazard and declared a halt to all commercial reprocessing activities until further notice.

27. Subsequent to the cessation of reprocessing planning, in the fall of 1977, the U.S. Department of Energy announced that a spent fuel disposal program would be offered to U.S. and foreign utilities. This program was to make available to the utilities on a full-cost recovery basis, a method for disposal of all fuel that had been discharged from operating reactors for five or more years. In the initial program, the DOE expected to build away-from-reactor (AFR) storage facilities to take care of the storage requirements until permanent disposal repositories had been developed, licensed, and placed in operation. As of today, no federal AFR's have yet been built, or started, and the date for even beginning to work on permanent disposal facilities has not yet been determined.

28. The absence of permanent high-level and low-level waste disposal capabilities has caused difficult problems for the planners and operators of the nation's commercial nuclear power plants. The potential disruption of the power supply to the nation's industry (and particularly to the continuous process needs of California's electronic industry) could cause vast losses, and backup supply plans are presently stymied. As a result of the lack of development of AFR storage facilities, almost all currently operating reactors are finding a need to expand the on-site storage capabilities.

29. Some currently operating plants are expected to fill all available on-site storage capability as early as 1983. Many will be short of spent fuel storage space by 1985. The NRC's Draft *Generic Environmental Impact Statement on Handling and Storage of Spent Light Water Power Reactor Fuel* (NUREG-0404, March 1978, Table F.4) estimates that even if fuel storage is compacted at all plants by a factor of 2.5, and if plants only operate at a 60% capacity factor, the following plants will lose storage and full core discharge capacity as indicated:

YEAR	PLANT	STATE
1976	Point Beach-1 & 2*	Wisconsin
1980	Maine Yankee	Maine
1980	Prairie Island-1 & 2	Minnesota
1980	San Onofre-1*	California
1981	Humboldt Bay-3	California
1981	Oconee-1, 2, & 3	So Carolina
1981	Robinson-2	So. Carolina
1982	La Crosse	Wisconsin
1982	Conn Yankee	Connecticut
1982	Turkey Point-3	Florida
1983	Fort Calhoun	Nebraska
1983	Indian Point-1	New York
1983	Calvert Cliffs-1 & 2	Maryland
1983	Kewaunee	Wisconsin
1983	Palisades	Michigan
1983	Surry-1 & 2	Virginia
1984	Turkey Point-4	Florida
1984	Indian Point-2	New York

*Some of the immediate pressure was relieved on these plants by shipment in 1978 and 1979 of some spent fuel to GE's Morris, Illinois Fuel Storage Facility. Future shipments are limited by the small storage capacity of that facility.

30. Away-from-reactor facilities have still not been authorized. It is essential that full core discharge capability be maintained for all operating reactors. Consequently, if no facilities are available by 1983-85, some of the above operating plants will have to derate or shutdown in order to ease the problem of disposal of spent fuel. California legislation and subsequent actions have attempted to safeguard the vital supply of energy from disruption and loss of reliability resulting from such problems. Until full resolution of these waste storage problems has been demonstrated, it is essential that the State of California continue to review the efforts of the federal government to solve the problem in order to assure the future reliability of California's energy supply.

[IX. *Other States' Concern About Economics and Reliability of Nuclear Plants for State Energy System Planning*]

31. The following are cases in which I have been involved in other states. My testimony there concerned matters which may be subject to NRC safety review and are also subject to state review for economics and reliability analysis purposes.

32. *In New York*: In 1977, I testified before the New York State Public Service Commission considering approval of the Jamesport Nuclear Plant proposed by the Long Island Lighting Company, concerning the financial and power generating reliability aspects of unresolved safety issues of the proposed plant.

33. *In New Jersey*: During the past two years, I have been a consultant to the State of New Jersey on three different projects. The first was a review of the proposed floating nuclear plant to be located off the coast near Atlantic City. The issue of concern to the state was the potential

impact such a plant may have on the tourism and fishing industries. The second project was to provide technical advice on the U.S. NRC hearing concerning the proposed expansion of the fuel storage facilities at the Salem nuclear plant. The third project, which is currently underway, is to evaluate the causes of the Three Mile Island accident. This accident has jeopardized the reliability of the electrical supply to consumers served by Jersey Central Power and Light (a subsidiary of GPU, owner of Three Mile Island) and has caused a substantial rate increase due to the need to procure make-up power to satisfy the needs of industry and residents of the area.

34. *In Oregon*: In 1978, I presented testimony before the Oregon Siting Council in the case of Portland General Electric's proposed Pebble Springs plant to be located in Oregon. The issues addressed in this testimony were the probable impact of the continued lack of resolution of high-level waste disposal on the reliability of the plant.

35. *In Louisiana*: In 1978, I presented testimony before the Louisiana Public Service Commission in the case of the Gulf States Utility's River Bend plant. Issues addressed in this study and testimony were the potential cost of unresolved safety issues, waste disposal, and decommissioning on the partially-completed plant which is scheduled for operation in 1985. The essence of this testimony was that the various unresolved problems confronting nuclear power could result in substantially increased costs to the consumer and in loss of generating capability due to a possible early shutdown of the plant.

36. *In Massachusetts*: In July, 1979, I was retained as a consultant to the Massachusetts Attorney General's Office to present testimony in the review of the proposed Pilgrim-2 nuclear plant by the Massachusetts Department of Public Utilities. The essence of this testimony is that the

unresolved generic problems and the new issues raised by the Three Mile Island accident will likely cause a substantial plant cost increase, construction delays, and affect the future reliability of the plant.

37. *In California*: In 1977, I was retained by the California Energy Commission to prepare and present information concerning the potential costs of decommissioning of nuclear power plants to be presented in the Sundesert case. The essence of my testimony was that decommissioning costs have not been carefully estimated nor have necessary provisions been made and that an amount equal to approximately 10% of the initial capital cost of the plant should be accrued for each plant and retained, with appropriate escalation provisions, to ensure that funds are available for future decommissioning.

38. In conclusion, in my opinion it is essential that State energy planning agencies have access to the type of information required to be submitted to the California Energy Commission by PRC Sections 25502, 25503, 25504, 25511 and 25520. This information is required to describe the proposed and alternative facilities and site characteristics, type of fuel, and the intended method of operation. Such disclosure is essential in order to evaluate the environmental impact, the cost, as compared to alternative systems, and the reliability of the proposed plant. "Safety and reliability" factors specified in PRC 25511 have a decided potential effect on plant cost and performance and on the reliability of the total electrical supply system. The State will be able to assure that a reliable power supply will be provided if the State, acting through the Energy Commission, has the authority in the Notice of intention phase to require full disclosure of all technical iformation [*sic*] on the project, as is required by PRC Sections 25502, 25503, 25504, 25511 and then conducts expert review and analysis, incorporated

into a preliminary and final report, as required by PRC Sections 25512 and 25514, with power to enforce compliance to State requirements through comparable sections in the Application for Certification stage. Authority to monitor the construction and operation of the proposed nuclear facility as provided in PRC Section 25532 is necessary to protect the interest of the State and its citizens to assure that the facility is constructed and operated as proposed in the Notice of Intention and Application for Construction to provide an economic and reliable source of power for the State of California.

39. All of the matters herein are known to me of my personal knowledge or of my personal opinion based on my education and experience. If called as a witness I am competent and would testify thereto.

OCTOBER 26, 1979

/s/ Dale G. Bridenbaugh
DALE G. BRIDENBAUGH

Subscribed and sworn to
before me this 26 day
of October 1979.

/s/ Paul C. Valentine
NOTORY PUBLIC

My commission expires: May 31, 1983

[Seal]

9. Order of the Supreme Court of the United States Granting Petition for Writ of Certiorari, Entered June 21, 1982.

Re: Pacific Gas and Electric Company, et al. v. State Energy Resources Conservation and Development Commission, et al., No. 81-1945

The petition for a writ of certiorari is granted limited to the following questions:

Whether petitioners' challenges to the provisions in the 1976 amendments to California's Warren-Alquist Act, Cal. Pub. Res. Code Sections 25524.1(b) and 25524.2 (West 1977), which condition the construction of nuclear plants on findings by the State Energy Resources Conservation and Development Commission that adequate storage facilities and means of disposal are available for high-level nuclear waste, are ripe for judicial review, and whether Sections 25524.1(b) and 25524.2 are pre-empted by the Atomic Energy Act of 1954, 42 U.S.C. Section 2011, *et seq.*

10. Contents of Appendix to Petition for Writ of Certiorari (Filed in the Supreme Court of the United States on April 20, 1982). This Appendix Has Not Been Reprinted but Is Incorporated by Reference and Itemized Herein.

App. Page

1. Opinion of the United States Court of Appeals for the Ninth Circuit in *Pacific Legal Foundation, et al. v. State Energy Resources Conservation and Development Commission*, et al., Nos 79-3365, 79-3382, 80-4265, 80-4273, filed October 7, 1981 1
2. Order of the United States Court of Appeals for the Ninth Circuit in *Pacific Legal Foundation, et al. v. State Energy Resources Conservation and Development Commission, et al.*, Nos 79-3365, 79-3382, 80-4265, 80-4273, denying the Petition for Rehearing, filed January 20, 1982 53
3. Opinion of the United States District Court, Eastern District of California in *Pacific Gas and Electric Company, et al. v. State Energy Resources Conservation and Development Commission, et al.*, No. CV S-78-527-R, filed April 25, 1980 55
4. Findings of Fact and Conclusions of Law of the United States District Court, Eastern District of California in *Pacific Gas and Electric Company, et al. v. State Energy Resources Conservation and Development Commission, et. al.*, No. CV S-78-527-R, filed April 25, 1980 65
5. Judgment of the United States District Court, Eastern District of California in *Pacific Gas and Electric Company, et al. v. State Energy Resources*

Conservation and Development Commission, et al., No. CV S-78-527-R, filed April 25, 1980 83

6. Pertinent provisions of the Atomic Energy Act of 1954, as amended, 42 U.S.C. §§ 2011-2296. . 87

7. Pertinent provisions of Title 10 of the Code of Federal Regulations 111

8. Pertinent provisions of the Warren-Alquist State Energy Resources Conservation and Development Act, California Public Resources Code §§ 25000-25986 193

9. September 29, 1977 letter from Energy Resources Conservation and Development Commission to Pacific Gas and Electric Company returning Notice of Intention for Stanislaus Nuclear Project. (Exhibit X admitted into evidence at trial.) 221

10. Staff Report on Data Adequacy for the Pacific Gas and Electric Company, Stanislaus Nuclear Project, Notice of Intention (NOI), November-1977, California Energy Resources Conservation and Development Commission. (Exhibit Y admitted into evidence at trial.) 241

Opposition

No. 81-1944
No. 81-1945

Office - Supreme
FILE
MAY 24 1982
ALEXANDER L. STEVAS,
CLERK

IN THE
SUPREME COURT OF THE UNITED STATES

October Term, 1981

PACIFIC LEGAL FOUNDATION, *et al.*,
Petitioners,

vs.

STATE ENERGY RESOURCES CONSERVATION AND DEVELOPMENT COMMISSION, *et al.*,
Respondents.

PACIFIC GAS AND ELECTRIC COMPANY and SOUTHERN CALIFORNIA EDISON COMPANY,
Petitioners,

vs.

STATE ENERGY RESOURCES CONSERVATION AND DEVELOPMENT COMMISSION, *et al.*,
Respondents.

Consolidated Response to Petitions for Writ of Certiorari to the United States Court of Appeals for the Ninth Circuit

RALPH CAVANAGH
Natural Resources Defense Council, Inc.
25 Kearny Street
San Francisco, CA 94108
Counsel for Respondents-Intervenors

LAURENCE H. TRIBE
Counsel of Record
Chief Appellate Counsel
1525 Massachusetts Ave.
Cambridge, MA 02138
(617) 495-4621

ROGER BEERS
KATHRYN BURKETT DICKSON
Special Counsel
350 Hayes Street, Suite One
San Francisco, CA 94102

WILLIAM M. CHAMBERLAIN
General Counsel

DIAN GRUENEICH
Deputy General Counsel
California Energy Resources Conservation and Development Commission
1111 Howe Avenue
Sacramento, CA 95825
Counsel for Respondents

QUESTIONS PRESENTED

1. Did the Ninth Circuit err in holding that a nuclear engineer, who allegedly lost his job when his employer cancelled a power plant project, was not entitled to summary judgment on the issue of his standing to challenge the validity of a state law, where (a) factual disputes existed as to whether the challenged law caused the project's cancellation, and (b) the engineer failed even to allege that invalidation of the law would likely redress his loss of employment?

2. Did the Ninth Circuit err in treating as unripe for adjudication two utilities' omnibus preemption challenges to state statutes that had not yet been authoritatively interpreted or finally applied to any utility's nuclear project, where the plaintiff utilities' claims of present injury were based exclusively on their fears about how the provisions might be interpreted and applied in the future?

3. Did the Ninth Circuit err in holding that two California statutes which address California's need for a reliable, economical, and environmentally acceptable supply of electrical energy, do so without intruding into federally preempted areas of radiation hazard control or obstructing any congressional objective regarding nuclear power?

4. Does any of these questions pose an issue of sufficient legal or factual significance to warrant current resolution by this Court?

TABLE OF CONTENTS

	Page
QUESTIONS PRESENTED	i
TABLE OF CONTENTS	iii
TABLE OF AUTHORITIES	v
JURISDICTION	1
STATEMENT OF THE CASE	2
Proceedings Below	2
The Atomic Energy Act of 1954 and the Challenged Statutes	4
Petitioners' Omnibus Preemption Claims	9
REASONS FOR DENYING THE WRIT	10
I. THE NINTH CIRCUIT WAS CLEARLY CORRECT IN HOLDING THAT PETITIONER THORNBERRY WAS NOT ENTITLED TO SUMMARY JUDGMENT ON THE QUESTION OF STANDING	12
II. THE UTILITIES' CHALLENGES TO STATE STATUTES THAT MIGHT NEVER BE APPLIED, ADMINISTRATIVE ACTIONS THAT MIGHT NEVER BE TAKEN, AND JUDICIAL DETERMINATIONS THAT MIGHT NEVER BE MADE, DO NOT WARRANT PLENARY REVIEW	14
A. The Ninth Circuit Was Clearly Correct in Refusing to Award the Utilities the Anticipatory Advisory Opinions They Sought	15
B. Even if the Utilities' Challenges to the Waste Disposal Law and Three-Site Requirement Were Ripe, Plenary Review by This Court of the Validity of Those Statutes Would be Premature	18
III. NOTHING IN THE MERITS OF PETITIONERS' OMNIBUS PREEMPTION ATTACK ON CALIFORNIA'S POWER PLANT REGULATIONS WARRANTS THIS COURT'S PLENARY CONSIDERATION	20
A. The Regulatory Means Chosen by California Herein Were So Plainly Authorized by Congress Itself That Petitioners' Only Proper Recourse Is To That Body Rather Than to This Court	20

Page

B. The Ninth Circuit's Decision Does Not Portend Any Nationwide Impact of a Sort Which Might Merit Review on Certiorari 23

C. Nor Is Certiorari Warranted to Consider Hypothetical "Conflicts" Which Petitioners Adduce From the Inaction of the NRC 26

CONCLUSION 27

TABLE OF AUTHORITIES CITED

Cases

Page

Commonwealth Edison Co. v. *Montana*, 101 S.Ct. 2946 (1981) 24
Communist Party v. *Subversive Activities Control Board*, 367 U.S. 1 (1961) 18
DeCanas v. *Bica*, 424 U.S. 351 (1976) 26
Duke Power Co. v. *Carolina Environmental Study Group, Inc.*, 438 U.S. 59 (1978) 14
Exxon Corp. v. *Governor of Maryland*, 437 U.S. 117 (1978) 25
FTC v. *Standard Oil Co.*, 449 U.S. 232 (1980) 17
Hodel v. *Virginia Mining & Reclamation Association*, 452 U.S., 264 (1981) 16
Illinois v. *Kerr-McGee Chemical Corp.*, Nos. 81-1110, 81-1152, (7th Cir., May 4, 1982) 11, 22
Kewanee Oil Co. v. *Bicron Corp.*, 416 U.S. 470 (1974) 26
McCulloch v. *Maryland*, 17 U.S. (4 Wheat.) 316 (1819) 20
Merrill Lynch, Pierce, Fenner & Smith, Inc. v. *Ware*, 414 U.S. 117 (1973) 23
New Hampshire v. *Atomic Energy Commission*, 406 F.2d 170 (1st Cir.), cert. denied, 395 U.S. 962 (1969) 26
New York Telephone Co. v. *New York Labor Department*, 440 U.S. 519 (1979) 26
Northern States Power Co. v. *Minnesota*, 447 F.2d 1143 (8th Cir. 1971). aff'd mem., 405 U.S. 1035 (1972) 11, 21
Orr v. *Orr*, 440 U.S. 268 (1979) 13, 14
Pacific Gas & Electric Co. v. *State Energy Resources Conservation and Development Commission*, 489 F.Supp. 699 (E.D. Cal. 1980) 3
Pacific Legal Foundation v. *State Energy Resources Conservation and Development Commission*, 472 F.Supp. 191 (S.D. Cal. 1979) 3
Perez v. *Campbell*, 402 U.S. 637 (1971) 22
Peterson v. *City of Greenville*, 373 U.S. 244 (1963) 13, 14
Ray v. *ARCO*, 435 U.S. 151 (1978) 26
Red Lion Broadcasting Co. v. *Federal Communications Comm'n.*, 295 U.S. 367 (1969) 22
Regents of Univ. of California v. *Bakke*, 438 U.S. 265 (1978) 13
Silkwood v. *Kerr-McGee Corp.*, 667 F.2d 908 (10th Cir. 1981) 11
Silver v. *New York Stock Exchange*, 373 U.S. 341 (1963) 23
Simon v. *Eastern Kentucky Welfare Rights Organization*, 426 U.S. 26 (1976) 14
Singleton v. *Wulff*, 428 U.S. 106 (1976) 14
The Montrosa v. *Carbon Black Export, Inc.*, 359 U.S. 180 (1959) 18
United States v. *Nixon*, 418 U.S. 683 (1974) 2
Valley Forge Christian College v. *Americans United for Separation of Church and State, Inc.*, 102 S.Ct. 752 (1982) 13

Page

Village of Arlington Heights v. *Metropolitan Housing Dev. Corp.*, 429 U.S. 252 (1977) 13

Federal Constitutional Provisions, Statutes, and Regulations

United States Constitution:
Article III 13, 14
Atomic Energy Act of 1954, 42 U.S.C., §§ 2011 et.seq. ..... passim
§ 1, 42 U.S.C., § 2011 24
§ 1, 42 U.S.C., § 2013(d) 24
§ 271, 42 U.S.C., § 2018 ..... 4, 21, 24, 27
§ 274, 42 U.S.C., § 2021 ..... 5, 22
§ 274(b), 42 U.S.C., § 2021(b) 5
§ 274(c), 42 U.S.C., § 2021(c) 5, 21
§ 274(k), 42 U.S.C., § 2021(k) 5, 21, 22, 24, 27
Clean Air Act Amendments of 1977:
§ 116, 42 U.S.C., § 7416 ..... 5, 21, 25
§ 122, 42 U.S.C., § 7422 ..... 5, 21, 25
Department of Energy Reorganization Act of 1977:
42 U.S.C., § 7112 25
Energy Reorganization Act of 1974:
42 U.S.C., § 5801 25
42 U.S.C., § 5812 25
42 U.S.C., § 5814 4
42 U.S.C., § 5841 4
NRC Authorization Act for Fiscal Year 1980, 96th Cong., 2d Sess. (1980) 16, 21, 25
§ 108(f) 5
28 U.S.C. § 1254(1) 1
U.S. Sup.Ct. Rule 19.6 1
10 C.F.R. §§ 51.20–51.26 20

State Constitutional Provisions and Statutes

Warren-Alquist State Energy Resources Conservation and Development Act, Cal. Pub. Res. Code, §§ 25000 et seq. ..... passim
§ 25500 6
§ 25502 6
§ 25503 4
§ 25504 ..... 4, 6
§ 25511 6
§ 25512 6
§ 25514 6
§ 25516 ..... 4, 6
§ 25517 6
§ 25519 7
§ 25520 7
§ 25523 7

Page

§ 25524 7
§ 25524.1(a) 15
§ 25524.1(b) 15
§ 25524.2 ..... 3, 9, 19
§ 25524.3 15
§ 25525 7
§ 25528 ..... 7, 16
§ 25532 7
N.Y. Public Authorities Law § 1005 24

Miscellaneous

Nucleonics Week, April 29, 1982, at 9 19
Petition for Reconsideration in the Matter of Nuclear Reprocessing and Waste Disposal Statutes, Docket Nos. 76-NL-1, 3 (1978) 18
R. Stern & E. Gressman, Supreme Court Practice 54–55 (5th ed. 1978) 1, 2
Washington Post, April 27, 1982 at 17 8

No. 81-1944
No. 81-1945

IN THE
SUPREME COURT OF THE UNITED STATES

October Term, 1981

PACIFIC LEGAL FOUNDATION, *et al.*,
Petitioners,
vs.
STATE ENERGY RESOURCES CONSERVATION AND DEVELOPMENT COMMISSION, *et al.*,
Respondents.

PACIFIC GAS and ELECTRIC COMPANY and SOUTHERN CALIFORNIA EDISON COMPANY,
Petitioners,
vs.
STATE ENERGY RESOURCES CONSERVATION AND DEVELOPMENT COMMISSION, *et al.*,
Respondents.

Consolidated Response to Petitions for Writ of Certiorari to the United States Court of Appeals for the Ninth Circuit

JURISDICTION

Of the seven petitioners filing papers with this Court herein, four were not even "parties to the proceedings in the court whose judgment is sought to be reviewed" (Sup. Ct. R. 19.6), and accordingly cannot seek certiorari under 28 U.S.C. § 1254(1) to review the Ninth Circuit's decision.[1] *See* R. STERN & E. GRESSMAN, SUPREME

[1] The petitioners listed in No. 81-1945 are Pacific Gas & Electric Company and Southern California Edison Company. Four of the

COURT PRACTICE 54–55 (5th ed. 1978); *cf. United States v. Nixon,* 418 U.S. 683, 690–92 (1974). Thus, only the petitions of Robert C. Thornberry in No. 81-1944 (*"PLF"*), and of Pacific Gas & Electric Company and Southern California Edison Company in No. 81-1945 (*"PG&E"*), are properly before this Court.[2]

STATEMENT OF THE CASE

Proceedings Below

Respondents, State Energy Resources Conservation and Development Commission, *et al.,*[3] oppose the petitions for certiorari in *PLF* and *PG&E* to review the Ninth Circuit's reversal of two federal district court judgments, consolidated on appeal in the court below. These judgments struck down, as preempted, key aspects of California's system for regulating the commercial generation of electricity for its people by state-regulated utilities.

In *PLF* the federal district court for the Southern District of California had summarily voided Cal. Pub. Res.

---

petitioners listed in No. 81-1944—Pacific Legal Foundation, the San Diego Coalition, the San Diego Section of the American Nuclear Society, and the San Diego County Building and Construction Trades Council—were all denied summary judgment by the trial court on standing grounds. *PLF* Pet. App. at 6. On November 1, 1979, the Ninth Circuit properly "dismissed [their] cross-appeal [on the standing issue] on the ground that it was not taken from a final judgment." *PG&E* Pet. App. (hereinafter "App.") at 8 n.11. These parties did not attempt to renew their standing claims in connection with petitioner Robert C. Thornberry's defense below of his favorable district court judgment. Nor do the questions presented in either petition even purport to bring their standing claims before this Court.

[2] Respondents file this single brief in opposition to both petitions.

[3] The respondents, hereinafter collectively referred to as "the Energy Commission," are listed in *PG&E* Pet. at ii.

Code § 25524.2 ("the waste disposal law"), by which California proposed to delay further state certification of nuclear power plants pending federal resolution of the nuclear waste disposal problem—a problem that could, if unresolved, doom such plants to future interruption or abandonment at federal insistence.[4] In *PG&E* the federal district court for the Eastern District of California had invalidated the waste disposal law and 16 other provisions of the Warren-Alquist State Energy Resources Conservation and Development Act ("the Warren-Alquist Act"), Cal. Pub. Res. Code §§ 25500–25986, California's comprehensive legislative scheme for regulating electric power supply.[5] Both courts held that the challenged statutes were preempted by the Atomic Energy Act of 1954, as amended, 42 U.S.C. §§ 2011 *et seq.*, on the ground that the laws invaded a sphere of exclusive federal regulatory authority under the 1954 Act, and frustrated federal objectives with respect to nuclear power.

The Ninth Circuit reversed, rejecting these preemption holdings after ruling (1) that the district court in *PLF* had erred in awarding summary judgment to plaintiff Thornberry without conducting a trial on his standing; and (2) that the district court in *PG&E* had erred in treating as ripe for adjudication, even at the behest of parties with standing, the host of anticipatory

---

[4] *Pacific Legal Foundation, et al. v. State Energy Resources Conservation and Development Commission, et al.*, 472 F.Supp. 191 (S.D. Cal. 1979), reprinted in *PLF* Pet. App. at 1–18.

[5] *Pacific Gas & Electric Co., et al. v. State Energy Resources Conservation and Development Commission, et. al.*, 489 F.Supp. 699 (E.D. Cal. 1980), reprinted in App. at 55–64. Hereinafter, all references to the provisions of the Warren-Alquist Act are to section numbers in the California Public Resources Code.

preemption challenges made by the utility plaintiffs. The Ninth Circuit held that only two of the 17 provisions challenged by those plaintiffs were ripe for review—the waste disposal law and Section 25503 of the Warren-Alquist Act, requiring a utility to include at least three alternative sites in its application for any proposed power plant ("the three-site requirement"). App. at 19–27.[6] The court concluded that neither was preempted by the Atomic Energy Act of 1954 because both were "enacted for purposes other than protection against radiation hazards" (*id.* at 2), and "do not impede congressional goals" (*id.* at 46).

The Atomic Energy Act of 1954 and the Challenged Statutes

The basic allocation of state and federal authority to regulate the commercial use of nuclear power was established by the Atomic Energy Act of 1954. That legislation allowed industry for the first time to participate in the development of nuclear power, authorizing private firms to take possession of nuclear materials and to build commercial reactors under licenses from the Atomic Energy Commission.[7] At the same time, Section 271 of the 1954 Act expressly preserved broad state authority over these facilities:

> "Nothing in this chapter shall be construed to affect the authority or regulations of any Federal, State, or

---

[6] The court noted that its conclusion regarding the validity of Section 25503 "necessarily affect[ed]" Sections 25504 and 25516, as well, since they also contained requirements relating to three sites. App. at 23 n.22.

[7] The Atomic Energy Commission ("AEC") was dismantled by Section 104 of the Energy Reorganization Act of 1974, 42 U.S.C. § 5814, and its promotional functions were transferred to the Energy Research and Development Administration. *Id.* The AEC's regulatory functions were transferred to the Nuclear Regulatory Commission ("NRC"). *Id.* § 5841.

> local agency with respect to the generation, sale, or transmission of electric power produced through the use of nuclear facilities licensed by the [Nuclear Regulatory] Commission." 42 U.S.C. § 2018.

In 1959, Congress made clear that any preemption of state authority was limited to regulation of "radiation hazards," when it added Section 274 to the 1954 Act. 42 U.S.C. § 2021. That provision establishes a procedure (in sub-section (b)) for delegating certain of the NRC's radiation protection responsibilities to the States. While sub-section (c) of Section 274 prevents the NRC from transferring to the States its *radiation protection* authority with respect to the construction and operation of any nuclear power plant, sub-section (k) contains an express disclaimer of any intent to preempt state authority *beyond* the regulation of radiation hazards:

> "Nothing in this section shall be construed to affect the authority of any State or local agency to regulate activities for purposes other than protection against radiation hazards." 42 U.S.C. § 2021(k).

Moreover, Congress has specifically authorized state regulation even of radiation hazards in the contexts of air pollution control and nuclear power plant emergency planning.[8]

---

[8] Under Section 122 of the Clean Air Act Amendments of 1977—relied on by the Ninth Circuit (App. at 33 n.28, 44), but nowhere mentioned by any petitioner—Congress permitted the States to regulate radioactive air emissions from nuclear power plants for the purpose of protection against radiation hazards, authorizing state and local government to adopt and enforce radioactive emission or ambient air standards more stringent than those imposed by the federal government. 42 U.S.C. §§ 7416, 7422. Under Section 108(f) of the NRC Authorization Act for Fiscal Year 1980, 96th Cong., 2d Sess. (1980), Pub. L. No. 96-295, 94 Stat. 783 (1980) (relating to nuclear power plant emergency planning), Congress specifically approved "the states' authority to set nuclear power plant siting and land use requirements more stringent than those of the NRC," as the Ninth Circuit observed. App. at 45. Nowhere do petitioners discuss this legislation either.

Based on its review of these enactments, the Ninth Circuit determined—consistent with the rulings of other circuits (*see* page 21 *infra*),—that Congress has expressly confined the preemptive force of the Atomic Energy Act of 1954 to certain forms of "state regulation of radiation hazards associated with nuclear power." App. at 33. The States remain free under the 1954 Act to approve or disapprove proposed nuclear power plants—as they may approve or disapprove proposed power plants utilizing other energy sources—from the standpoints of cost, reliability, land-use, resource-allocation, and other vital state policies. App. at 43.[9]

The provisions of state law challenged by petitioners are part of a comprehensive energy planning and facility siting statute intended to serve these state interests. Thus, California's Warren-Alquist Act requires that any utility proposing to build a power plant in the state, whether nuclear or non-nuclear, submit data dealing with a large number of subjects concerning the proposal.[10] The Energy Commission is required to make

[9] The Ninth Circuit acknowledged, of course, that "[s]tate regulations which directly conflict with regulations of the NRC would . . . be preempted even if they were enacted for purposes other than protection against radiation hazards." App. at 33 n.29. This case plainly presents no such conflict. *See* page 23–27 *infra*.

[10] The provisions challenged by the utility petitioners require that a utility obtain the Energy Commission's "certification" of any energy facility prior to commencing construction (§§ 25500, 25517), and they establish a two-stage licensing process for this purpose. The process begins with the utility's submission of a "Notice of Intention" ("NOI") to build a power plant (§ 25502). In the NOI phase, which lasts a year, the Commission examines the need for additional energy facilities and the relative merit of particular sites and technologies. The provisions challenged by petitioners specify the general contents of the NOI to be submitted by the utility (§ 25504), and authorize the Commission to seek certain additional information (§ 25511). Other provisions merely specify the format or findings required in the Commission's initial hearing order (§ 25512), final report (§ 25514), and approval of the NOI (§ 25516).

various determinations based on this data—including, for example, whether the supply project conforms to the Commission's long-range demand forecast (§§ 25523(f), 25524). As the Ninth Circuit correctly observed, "we have no way of knowing . . . to what purposes the information might be put . . . whether the Energy Commission will ever deny certification, or whether such a denial might be based upon impermissible reasons." App. at 20–21. For present purposes, what may be most significant is the statute's specific directive—not mentioned by petitioners and not yet construed by any state court—that "[i]n no event shall the [Energy] Commission make any finding in conflict with applicable federal law or regulation" (§ 25525).[11]

Of the two provisions in the Warren-Alquist Act held ripe for review by the Ninth Circuit, one requires that information be submitted on three alternative sites for any proposed power plant (§ 25503). This three-site law "applies to all power plants, nuclear and non-nuclear." App. at 41. Its purpose is not only to provide the Energy

---

If the NOI is approved, the utility may then file an "Application for Certification" ("AFC "), which commences an eighteen-month proceeding to determine whether a permit should be issued for the actual construction of the facility on a particular site (§ 25519). In the AFC phase, the provisions challenged by petitioners simply require that certain information be included in the AFC and that the AFC be distributed to various agencies (§§ 25519, 25520). They also require that the Commission's decision on the AFC include certain findings (§ 25523), and that the Commission establish a "monitoring system" to ensure compliance with its decisions (§ 25532).

[11] Other provisions of the Warren-Alquist Act mandate all appropriate deference to relevant federal law as well. *See, e.g.*, § 25500 (certification authority vested in Energy Commission "to the extent permitted by federal law"); § 25528 (Energy Commission required to assure that areas surrounding a proposed plant will not subsequently exceed population densities specified by the NRC and by applicable state land-use planning requirements).

Commission with "an efficient means of deciding where a proposed power plant should be located" (*id.*), but also to allow the "banking" of other acceptable sites in order to expedite future siting proceedings. It is obviously "unrelated to protection against radiation hazards." *Id.* at 40–41.

Nor does the other provision held ripe for review by the Ninth Circuit—the waste disposal law—purport to regulate radiation hazards. As the Ninth Circuit observed, the waste-disposal law is *not* directed at *where, how safely,* or *by what methods,* any power plant's radioactive wastes are to be disposed of—and, *a fortiori,* is not a "regulation" of any radiation hazards associated with such waste disposal. Rather, the waste disposal law reflects California's concern that federal authorities might order the shutdown of nuclear plants generating such wastes, if a method of waste disposal is not approved by the federal government on a timely basis.[12] As the Ninth Circuit stated:

> "Until a method of waste disposal is approved by the federal government, California has reason to believe that uncertainties in the nuclear fuel cycle make nuclear power an uneconomical and uncertain source

---

[12] Although the expected useful operating life of a nuclear power reactor is approximately 30–40 years, the storage capacity on-site for the wastes generated by the reactor is typically limited to 5–10 years accumulation. Thus, off-site storage for such wastes—at a federally approved repository—must be made available after that time in order to keep reactors operating. Bridenbaugh Declaration ¶ 30 [Excerpts of Record on appeal (hereinafter "ER") at 257]. *See also, Washington Post,* April 27, 1982 at 17 ("As [s]pent fuel from the 74 nuclear power plants around the country . . . pil[es] up in temporary storage sites," some of the plants might "be forced to close."). For instance, Virginia Electric Power Company officials project that unless federal waste policies are resolved, the utility may have to shut down its nuclear plant, because it will run out of storage space for its used-up fuel. *Id.*

> of energy. The legislature has chosen to mandate reliance upon other energy sources until these uncertainties associated with nuclear power are resolved." App. at 40.

Thus, the waste disposal law is concerned solely with the existence of a federally approved waste disposal method, "not with the adequacy of the method." App. at 40.[13]

Petitioners' Omnibus Preemption Challenge

Neither of the two laws sustained below, nor any others challenged in the district courts, has *ever* been applied to deny or condition certification of a nuclear plant proposed by the utility petitioners or by anyone else, much less been given any authoritative construction by a state court. The utilities assert that all their claims are ripe because they challenge "the *very existence* of the California certification system and other statutes. . . ."

---

[13] California itself is not a probable target for ultimate disposal of high-level nuclear wastes; the State seems "never [to have] been proposed as the site for a permanent high-level radioactive waste disposal facility." Lash Affidavit ¶ 11 [ER at 315].

The utility petitioners assert that the waste disposal law requires the Energy Commission to make "an *independent* determination whether a satisfactory technology or means for the disposal of high-level nuclear waste *exists in fact*." (*PG&E* Pet. at 18 (emphasis in original)), implying that the Commission must necessarily second-guess the safety of the technology eventually approved by the federal government. But section 25524.2 does not, on its face, require any such thing. Rather it merely requires a determination that "there exists a demonstrated technology or means for the disposal of high-level nuclear waste," and the statute makes clear in subsection (c) that this does not mean that actual "facilities for the application of such technology and/or means be available" at the time this determination is made. As the statute itself explains, the State must be assured "that the United States through its authorized agency has approved" this technology. Finally, it was obviously necessary in Section 25524.2 to vest some state agency—in this case, the Energy Commission—with authority to determine whether all of these conditions for reactor licensing had been met.

PG&E Pet. at 26 (emphasis in original). The Ninth Circuit's response was straightforward: "[a] case or controversy is not presented simply because a party is subject to a general regulatory process which, when applied to the specific facts developed in some future administrative proceeding, *might* cause a state agency to take a particular action which some court *might* thereafter determine to be unconstitutional." App. at 22. (citation omitted).

Petitioner Thornberry, who has not even alleged a *risk* of state action directed against him, seeks to assert derivatively the third-party rights of the regulated utilities—and claims both standing to enforce such rights and the ripeness of his attempt to do so—on the theory that the Sundesert nuclear project on which he had been employed was cancelled *partly* because of the pendency of the waste disposal law. Given the factual dispute as to whether the project would have been cancelled even without that law,[14] and given that Thornberry had not even "alleged . . . that he might get his job back if the Sundesert project were revived" (App. at 16), the Ninth Circuit held summary judgment in Thornberry's favor on the issue of standing to have been improper. *Id.* at 13.

REASONS FOR DENYING THE WRIT

Several circuit courts of appeals have consistently held that the Atomic Energy Act of 1954 impliedly preempts state regulation of radiological hazards but that Congress has expressly declined to preempt other

[14] The Ninth Circuit noted there was evidence in the record from which a trier of fact could infer that the Sundesert project was financially infeasible. App. at 11–13.

forms of state regulation of electric power generation by nuclear plants. *Northern States Power Co. v. Minnesota,* 447 F.2d 1143, 1150 (8th Cir. 1971), *aff'd mem.,* 405 U.S. 1035 (1972); *Silkwood v. Kerr-McGee Corp.,* 667 F.2d 908, 920 (10th Cir. 1981); *Illinois v. Kerr-McGee Chemical Corp.,* Nos. 81-1110, 81-1152 (7th Cir., May 4, 1982). The Ninth Circuit's decision is well within this consensus as to the scope of federal preemption under the Atomic Energy Act. Petitioners' dissatisfaction with the result reached by the Ninth Circuit in applying these clear rules is not accompanied by any demonstration of conflict with the decisions of another circuit or of this Court that would justify granting a writ of certiorari.

Certainly, the "across-the-board" character of the challenged statutes (*PLF* Pet. at 14) does not lend any national significance to the Ninth Circuit's otherwise unremarkable decision. The State's undeniable ability to refuse to license proposed nuclear plants, one by one, as inconsistent with the State's power needs, its environmental concerns apart from radiation hazards, or its cost-benefit assessments of alternative means of generating power (*PG&E* Pet. at 16–17) renders protests about "across-the-board" regulation simply a quarrel with the State's chosen mechanism for producing an indisputably lawful result.

Federal judicial action to deprive a State of the option to proceed with caution in licensing new nuclear plants for commercial power generation on the record in this case would require *both* an unprecedented disregard of Article III limits on federal court intervention *and* an override of Congress's explicit allocation of authority between the NRC and the States with respect to nuclear power regulation. The Ninth Circuit, in declining peti-

tioners' invitation to take these two steps—steps that would swell federal judicial power at the expense of both Congress and the States—has vindicated well-settled and important principles of federalism and of the separation of powers, but has provided no occasion for plenary review by this Court.

I. THE NINTH CIRCUIT WAS CLEARLY CORRECT IN HOLDING THAT PETITIONER THORNBERRY WAS NOT ENTITLED TO SUMMARY JUDGMENT ON THE QUESTION OF STANDING.

On motion for summary judgment below, petitioner Thornberry claimed standing on the grounds that (1) the waste-disposal law caused SDG&E, his employer (but not a party below), to cancel the Sundesert nuclear power plant project on which he had been employed as a nuclear engineer, and (2) the cancellation of the Sundesert project caused Thornberry to lose his job. App. at 11. The Ninth Circuit noted that the Energy Commission disputed both of these premises (*id.*), and concluded that these material questions of fact as to "causation" should have precluded a grant of standing to Thornberry on summary judgment.[15] *Id.* at 13. The Ninth Circuit further noted that Thornberry had not demonstrated any likelihood that Sundesert would proceed if the nuclear waste disposal law was invalidated,

[15] Observing that it could "affirm a grant of summary judgment only if the material facts are undisputed and the moving party is entitled to judgment as a matter of law" (App. at 11), and that it was required to "view all evidence and factual inferences in the light most favorable to the non-moving party, the Energy Commission" (*id.*), the Ninth Circuit noted the "material questions" of causation raised by the Energy Commission's evidence (1) that the Sundesert project was independently doomed by financial obstacles and (2) that the Sundesert project had been cancelled notwithstanding the pendency of a bill in the California Assembly exempting the project from the waste disposal law. *Id.* at 11–16.

and that Thornberry had "not even alleged, much less proved, that he might get his job back if the Sundesert project were revived" *Id.* at 16. Thus, the Ninth Circuit concluded that "[o]n the record before us, it is a mere speculative possibility that the relief sought would remedy Thornberry's injury." *Id.* at 16. The court held that "[s]ummary judgment on the issue of standing was therefore improper." *Id.* at 13.

In light of this Court's frequent admonition that, as an "irreducible minimum," Article III requires a plaintiff invoking federal judicial power to demonstrate both that his injury "fairly can be traced to the challenged action" and that the injury "is likely to be redressed by a favorable decision" (*Valley Forge Christian College v. Americans United For Separation of Church and State, Inc.*, 102 S.Ct. 752, 758 (1982)), the Ninth Circuit was clearly correct in holding that the district court had erred in granting Thornberry's motion for summary judgment on the standing issue while material issues of fact remained as to causation and redressability.[16] The

[16] The cases cited by petitioner Thornberry (*PLF* Pet. at 16–19) represent no departure from this Court's well-established redressability requirement. In *Village of Arlington Heights* v. *Metropolitan Housing Development Corp.*, 429 U.S. 252, 262 (1977), this Court held that a "substantial likelihood" existed that respondent's proposed housing project would proceed if the offending ordinance were invalidated. Similarly, in *Duke Power Co.* v. *Carolina Environmental Study Group, Inc.*, 438 U.S. 59, 74–75 (1978), the Court found a "substantial likelihood" that invalidation of the Price-Anderson Act would block two nuclear power plants which respondents viewed as a threat to them. And in *Regents of the University of California* v. *Bakke*, 438 U.S. 265, 281 n.14 (1978), this Court ruled that the injury to respondent of being excluded from competition for all 100 places in a medical school class on the basis of his race was "likely to be redressed" by invalidating the special program prescribing his exclusion. *Peterson* v. *City of Greenville, 373 U.S. 244 (1963)*, and *Orr* v. *Orr* 440 U.S. 268 (1979), are altogether inapposite. In *Peterson*, this Court held, *inter alia*, that trespass convictions that had the effect of enforcing a city ordinance mandating racial discrimination

district court's ruling was indeed "gratuitous and thus inconsistent with the Article III limitation." *Simon v. Eastern Kentucky Welfare Rights Organization*, 426 U.S. 26, 38 (1976).[17]

For these reasons, certiorari must be denied in *PLF*. As discussed below, it must also be denied in *PG&E*.[18]

II. THE UTILITIES' CHALLENGES TO STATE STATUTES THAT MIGHT NEVER BE APPLIED, ADMINISTRATIVE ACTIONS THAT MIGHT NEVER BE TAKEN, AND JUDICIAL DETERMINATIONS THAT MIGHT NEVER BE MADE, DO NOT WARRANT PLENARY REVIEW.

The utility petitioners offer no persuasive reasons for this Court to review now those matters which were held

---

were invalid regardless of the motives of the private actor invoking the trespass statute. 373 U.S. at 248. And in *Orr*, the Court refused to bar challenges to underinclusive statutes simply because a state could theoretically thwart any successful plaintiff by rewriting the invalidated law to the plaintiff's disadvantage. 440 U.S. at 272.

[17] The Ninth Circuit also pointedly observed that Thornberry's alleged injury "result[ed] from the independent action of a third party not before the court"—SDG&E, Thornberry's erstwhile employer. App. at 15 n.17. In this respect, Thornberry's suit may be seen as an effort to invoke SDG&E's rights under the Atomic Energy Act, although Thornberry offers no reason to depart from the settled principle that "one party [should ordinarily be denied] standing to assert the legal rights of another" (*Duke Power Co. v. Carolina Environmental Study Group, Inc.*, 438 U.S. 59, 80 (1978))—a principle of avoiding "adjudication of rights which those not before the Court may wish to assert, and [of providing] the assurance that the most effective advocate of the rights at issue is present to champion them." *Id.*, citing *Singleton v. Wulff*, 428 U.S. 106, 113–14 (1976) (plurality opinion). For this independent reason, Thornberry was properly denied standing.

[18] Thornberry is clearly not entitled to seek review in this Court of the Ninth Circuit's substantive rulings unless the Ninth Circuit erred in holding that Thornberry had failed to establish his own standing. Thus, it makes no difference that in the wake of the Ninth Circuit's substantive rulings "it would be futile for Robert Thornberry to further attempt to challenge a state law which has already been ruled valid." *PLF* Pet. at 19. Inasmuch as the Ninth Circuit's reversal in *PLF* on the standing issue left *only* the substantive issues in *PG&E* appropriate for review by the Ninth Circuit, Thornberry is in effect claiming the right to seek review of the Ninth Circuit's disposition of a case to which he was not a party.

unripe for federal adjudication by the Ninth Circuit. Indeed, even their challenges to the two provisions which the Ninth Circuit held ripe for such adjudication do not present an appropriate occasion for this Court's plenary review at this time.

A. The Ninth Circuit Was Clearly Correct In Refusing to Award the Utilities the Anticipatory Advisory Opinions They Sought.

Twelve of the 15 provisions of the Warren-Alquist Act which were deemed unripe for review by the court below merely established licensing procedures or information-gathering requirements. The Ninth Circuit was properly unwilling to speculate as "to what purposes the information might be put" in this "certification system," or to guess whether or why a power plant proposed by the utility petitioners might ever be rejected. App. at 20–21. Two other provisions not considered timely for adjudication are no longer being challenged by the utility petitioners.[19] The final unripe provision, dealing with the acquisition of development rights in the vicinity of nuclear power plants, was also one which had not yet been applied or interpreted by the State and might never have to be invoked. Thus the court of appeals concluded that the question of its constitutionality "would be better decided after the statute has been

[19] Section 25524.1(a) predicated California's future reliance on nuclear power plants that require "reprocessing" of fuel upon the establishment of the necessary technology, and Section 25524.3 ordered a study of the feasibility of undergrounding or berm containment of nuclear power plants. The utility petitioners have abandoned any challenge to these provisions in their petition (*PG&E* Pet. at 6 n.5), but maintain their challenge to subsection (b) of Section 25524.1, dealing with the storage capacity for "spent fuel" at the reactor site. The Ninth Circuit correctly held, however, that the challenge to Section 25524.1(b) was not ripe for review "[b]ecause we cannot know whether the Energy Commission will ever find a nuclear plant's storage capacity to be inadequate." App. at 25.

applied." *Id.* at 22.[20]

Because these utilities have never pursued certification of a nuclear project under these laws (*see* notes 21, 25 *infra*), they are reduced to arguing that "the *very existence*" of these statutes causes them judicially cognizable injury. *PG&E* Pet. at 26 (emphasis in original). Thus, in lieu of seeking certification of a power plant from the Energy Commission, petitioners requested an advisory opinion from a federal district court—despite "this Court's oft-repeated admonition that the constitutionality of statutes ought not to be decided except in an actual factual setting that makes such a decision necessary." *Hodel v. Virginia Mining & Reclamation Association,* 452 U.S. 264, 294–95 (1981).

It is for want of any concrete application of the laws challenged below that these petitioners have been compelled to make the myriad, speculative, and broadly framed preemption claims asserted in this case. Accordingly, because petitioners have not awaited—or even sought—the kind of definitive state agency or judicial construction of the statutes which would appear in a decision approving or rejecting a nuclear plant, petition-

[20] This provision of the Warren-Alquist Act, Section 25528, again applies to all kinds of power plants, and in the case of nuclear plants, simply requires an applicant, as a prerequisite for Energy Commission approval, to agree to acquire such rights as may be needed to assure that areas surrounding a proposed plant will not subsequently exceed population densities specified by the NRC itself and by all applicable state land-use planning requirements. The Ninth Circuit noted that the Energy Commission was directed to waive the development-rights acquisition requirement under certain circumstances, and that the statute contemplates that the Energy Commission "will ordinarily follow NRC standards on population density." App. at 22–23. Moreover, state authority to impose such land-use restrictions was clearly confirmed by Congress in the NRC Authorization Act for Fiscal Year 1980, discussed in note 8 *supra*.

ers cannot point to a single instance in which the Energy Commission has regulated radiation hazards.[21] For this reason, petitioners sidestep the unbroken line of judicial precedents limiting the zone of federal preemption in this area to radiation hazard control, and seek to extend that zone across some undefined but unmistakably wider terrain. Ultimately, petitioners' claims could not be considered ripe for review unless one were to accept their radically expansive notion that there is something fundamentally awry in the mere fact that there "coexist two regulatory agencies—one federal and one state"—or in the fact that a public utility can be "required to serve two exacting taskmasters." *PG&E* Pet. at 9, 4–5. Such assertions are simply too naive to merit this Court's plenary attention.[22]

---

[21] In the absence of such a final decision, the utilities rely heavily on speculation arising out of a single incident—a dispute between the Commission and PG&E over the contents of the initial application for a power plant known as the Stanislaus Project. *PG&E* Pet. at 22–23. Even if petitioners' characterization of this incident were accepted, this Court has made clear that an agency's treatment of the document which initiates a proceeding—in this case a preliminary license application—cannot be reviewed as a definitive statement of the agency's position on the issues to be decided in the proceeding. *See FTC v. Standard Oil Co.*, 449 U.S. 232, 239–43 (1980). Moreover, in this case the trial court had before it uncontroverted testimony from the Commission's staff, regarding the Commission's legitimate purposes, unrelated to radiation protection, for demanding the information in question. *See* Direct Testimony of Gary Simon, pp. 81–100 (Jan. 7, 1980).

[22] The Ninth Circuit similarly refused to allow the utility petitioners to "establish a justiciable controversy by simply asserting that the risk of future harm causes them a present injury." App. at 22. Beyond the claim that all 15 statutes deemed unripe by the Ninth Circuit stand in the aggregate as an "absolute barrier" to their plans, petitioners make no attempt to show that the supposed hardships of participating in an Energy Commission siting proceeding constitute anything beyond "the expense and annoyance of litigation [which] is 'part of the social burden of living under government.'" *FTC v. Standard Oil Co.*, 449 U.S. 232, 244 (1980). Nor is there anything in the findings of the trial courts below which made it inappropriate for the Ninth Circuit to examine the differences in the statutes before it to determine

B. Even if the Utilities' Challenges to the Waste Disposal Law and Three-Site Requirement Were Ripe, Plenary Review by This Court of the Validity of Those Statutes Would be Premature.

While the Ninth Circuit held that the utilities' challenges to the waste disposal law and the three-site requirement were *ripe* for adjudication, they are surely *premature* for review *by this Court on certiorari* while there remain major unanswered questions as to how those laws will be interpreted by either the Energy Commission or the State's courts—especially in light of the Warren Alquist Act's repeated injunctions to the Energy Commission to comply with federal law. As this Court has observed, even resolution by this Court of "questions of public importance . . . can await a day when the issue is posed less abstractly" than it plainly is here. *The Montrosa v. Carbon Black Export, Inc.*, 359 U.S. 180, 184 (1959) (dismissing certiorari as improvidently granted).

Thus, although the petitioning utilities now complain that the waste disposal law prevents them from planning for nuclear power plants until the Energy Commission has determined that a means of waste disposal exists, over four years ago these same petitioners argued before the Energy Commission that it could even then affirmatively find that the nuclear waste disposal technology required by the waste disposal law already existed.[23] While the Energy Commission has always disagreed with this contention, had petitioners pursued

---

which claims "would be illuminated by the development of a better factual record" (App. at 20) and thus should await application by the agency. *Cf. Communist Party v. Subversive Activities Control Board*, 367 U.S. 1, 71 (1961).

[23] *See* Petition for Reconsideration in the Matter of Implementation of Nuclear Reprocessing and Waste Disposal Statutes, Docket Nos. 76-NL-1, 3 (1978).

this argument in state court to a favorable conclusion, any question of preemption involving that provision could have been mooted. Even if the Ninth Circuit was correct in ruling that the district court in *PG&E* "did not abuse its discretion in declining to abstain" (App. at 27 n.24), the case for *this* Court's discretionary review is gravely weakened by the absence of any definitive state court ruling on this question of state law. Moreover, there is no reason to assume in advance—as the utilities apparently do (*see PG&E* Pet. at 18–19)—that the Energy Commission or the California Legislature would ever determine that a waste disposal technology does *not* exist if the federal government at some later date finds that one *does*.[24] Similarly, there is no reason to hypothesize, as the utilities do (*see PG&E* Pet. at 20), any conflict between California's requirement of three sites and the NRC's requirement of one—in advance of the actual siting proceedings that would consider particular sites.[25]

---

[24] As the Ninth Circuit noted, "[s]uch a possibility need not concern us . . . [since] it will be time to consider any future conflicts if and when they arise." App. at 40 n.35. Indeed, although the Ninth Circuit held the waste disposal law ripe for review, its opinion shows some hesitancy in doing so:

"Section 25524.2 does not have any immediate impact on the utilities; they may continue to submit notices of intention and applications for certification for their proposed nuclear plants, and the Energy Commission must still receive and process the notices and applications even though the required findings have not been made. . . . No plants may be certified until the findings are made, but the utilities concede that their proposed plants are many years from being eligible for certification." App. at 26.

Indeed press accounts of this law have noted that "[n]o particular plant is threatened by the moratorium [under the waste disposal law] since plants under construction are not affected and no new nuclear power plants are planned in California in the foreseeable future." *Nucleonics Week*, April 29, 1982, at 9.

[25] Indeed, there was uncontradicted evidence in the trial court of efforts by the Energy Commission, PG&E, and the NRC to coordinate the siting proceedings of the two agencies in dealing with the Stanislaus project (*see* note 21 *supra*). *See* Hahn Declaration

Inasmuch as the waste disposal law and the three-site requirement have never been construed or applied in any such certification proceedings and have never been reviewed by the California Courts, the Ninth Circuit's substantive assessment of the reach of the Atomic Energy Act of 1954 with respect to those laws is at best premature for plenary review by this Court.[26]

Whatever one's views of the merits, therefore, certiorari should be denied for these reasons.

III. NOTHING IN THE MERITS OF PETITIONERS' OMNIBUS PREEMPTION ATTACK ON CALIFORNIA'S POWER PLANT REGULATIONS WARRANTS THIS COURT'S PLENARY CONSIDERATION

A. The Regulatory Means Chosen by California Herein Were So Plainly Authorized by Congress Itself that Petitioners' Only Proper Recourse Is to That Body Rather than to This Court.

Nothing in either of the petitions filed herein suggests a need for this Court's plenary review of the Ninth Circuit's analysis of the scope of federal preemption under

---

¶¶ 5–14 [ER at 264–70]. PG&E aborted this coordination effort by filing this suit, although its chief supply planner had written the NRC to say, "I see no procedural conflicts that should occur between the Energy Commission's and the NRC's review processes. . . ." *Id.*, Exh. D [ER at 278]. Moreover, the characterization of the NRC's procedures as requiring only one site may itself be an exaggeration given NRC regulations calling for information from applicants relating to "alternatives to the proposed action." *See* 10 C.F.R. §§ 51.20–51.26.

[26] Although respondents argued below that neither of these two laws was ripe for review, they have not cross-petitioned from the Ninth Circuit's contrary ripeness holding, believing that no issue worthy of certiorari is presented by that holding in light of the Ninth Circuit's favorable ruling on the merits. Respondents acknowledge, however, that lack of ripeness, rather than absence of an implied cause of action for private enforcement, was the bar to the utilities' invocation of the Atomic Energy Act of 1954. For the utilities relied on the Atomic Energy Act of 1954 and the Supremacy Clause only defensively, *cf. McCulloch v. Maryland,* 17 U.S. (4 Wheat.) 316 (1819), rather than "claiming enforcement rights under the [1954] Act." App. at 52 (Ferguson, J., concurring). That California has yet to move against these utilities may make such reliance premature, but it does not transgress limits on inference of positive causes of action.

the Atomic Energy Act of 1954, or of the propriety of the state authority exercised in the waste disposal law and in the three-site requirement. Indeed, despite petitioners' exertions to make this case appear otherwise, the instant dispute is not truly between California and Congress, but rather between the State and certain of its own regulated electric utilities. Those utilities evidently wish to make their own determinations as to electricity supply in the case of nuclear power plants, without the usual accountability to the State that licenses these utilities to meet its power needs. As the Ninth Circuit carefully explained, however, Congress has amply authorized the States to make just the sorts of decisions upheld below under Sections 271 and 274(k) of the Atomic Energy Act of 1954,[27] and, indeed, has authorized the States to make decisions regarding control of radiation hazards under the Clean Air Act Amendments of 1977 and the NRC Authorization Act for Fiscal Year 1980. *See* App. at 29–33, 44–45; *see also* note 8 *supra*.

Nor does the decision below conflict with any ruling

[27] The utilities' assertion that Section 271 protects a State's authority over such electric power only "*after* it is generated" (*PG&E* Pet. at 14 n.11, emphasis in original) is plainly contradicted by Section 271's express reservation of state authority over electric power "generation" as such, and finds no support in any decision of this Court or any other. Likewise the utilities' assertion that Section 274(c) was "intended to preserve the *exclusivity* of the NRC's jurisdiction" in areas *beyond* radiation hazards (*PG&E* Pet. at 17 (emphasis in original)) ignores the fact that Section 274 by its terms deals *only* with the regulation of "radiation hazards." Moreover, "[t]he only logically acceptable reason for inclusion of subsection (k) . . . was to make it clear that Congress was not, by subsection (c) of the 1959 amendment, in any way further limiting the power of the states to regulate activities, *other than radiation hazards,* associated with those areas over which the AEC was forbidden by that subsection to relinquish its control." *Northern States Power Co. v. Minnesota*, 447 F.2d 1143, 1150 (8th Cir. 1971), *aff'd mem.*, 405 U.S. 1035 (1972) (emphasis in original).

of this Court or of any other circuit. While the utility petitioners attempt to conjure up a conflict between the Ninth Circuit's decision and that of the Eighth Circuit in *Northern States Power Co. v. Minnesota,* 447 F.2d 1143 (8th Cir. 1971), *aff'd mem.,* 405 U.S. 1035 (1972) (*see PG&E* Pet. at 10), in fact the Ninth Circuit expressly followed the decision in *Northern States.* App. at 35. As the Seventh Circuit recently stated in *Illinois v. Kerr-McGee Chemical Corp.,* Nos. 81-1110, 81-1152, Slip Op. at 17 (7th Cir., May 4, 1982), "the Ninth Circuit agreed with the Eighth Circuit in *Northern States* that Congress intended the Atomic Energy Act to preempt state regulation of radiation hazards." [28]

The utility petitioners' claims of preemption under the Atomic Energy Act are ultimately premised not on

[28] Even petitioner Thornberry agrees with this proposition (*PLF* Pet. at 7), although he purports to discern in the Ninth Circuit's review of the legislative history of the waste disposal law a violation of this Court's decision in *Perez v. Campbell,* 402 U.S. 637, 651–52 (1971). Thornberry would have preferred that the Ninth Circuit give less credence to that law's actual history in determining its purposes. *PLF* Pet. at 11. In his view, the Ninth Circuit should have divined those purposes from an analysis of the text of another measure, Proposition 15, which was in fact defeated (*id.* at 10)—despite this Court's observation that "unsuccessful attempts at legislation are not the best of guides to legislative intent." *Red Lion Broadcasting Co. v. Federal Communications Comm'n,* 295 U.S. 367, 381 n.11 (1969). Nothing in *Perez* requires that this bizarre mode of statutory construction be utilized in a preemption case. Rather, the Court there determined that the state law obstructed a federal objective and then held that it was immaterial whether the State's purpose was to obstruct the purpose of the federal law or not. If the Atomic Energy Act in fact contained a federal pro-nuclear mandate, intended to override all state objections based on need, cost, or reliability, then *Perez* might indeed make the State's purposes in regulating nuclear facilities irrelevant. But the Atomic Energy Act manifestly contains no such mandate (*see* note 30 *infra*), and *Perez* surely does not require that the State's purposes of regulation be ignored when Congress has expressly chosen such purposes in Section 274(k) as the dividing line between preempted and non-preempted regulation.

any plausible interpretation of the 1954 Act, but on these petitioners' extravagant notions of what "preemption" is all about. Thus, while refusing to acknowledge the *express limitations* on preemption stated in the Atomic Energy Act itself, the utilities appear to believe that the mere overlap in the subject matters of regulation between federal and state authorities somehow requires the ouster of all state authority across this wide realm. *See, e.g., PG&E* Pet. at 4, 21. The Ninth Circuit correctly rejected this unprecedented approach, and conducted instead a careful and detailed assessment of the particular interests and objectives underlying the federal and state enactments at issue, in an effort to "reconcile 'the operation of both statutory schemes with one another rather than holding one completely ousted.'" *Merrill Lynch, Pierce, Fenner & Smith, Inc. v. Ware,* 414 U.S. 117, 127 (1973), quoting *Silver v. New York Stock Exchange,* 373 U.S. 341, 357 (1963). *See* App. at 37–46.

When thus understood, petitioners' claims merit no further judicial review. If these utilities seek relief from the specific forms of state regulation upheld below, they should be petitioning Congress and not this Court.

B. The Ninth Circuit's Decision Does Not Portend Any Nationwide Impact of a Sort Which Might Merit Review on Certiorari.

It goes without saying that the decision below—upholding two aspects of California's system for regulating its electric utility companies—is of moment to California and the utilities it regulates. But the utilities' assertion that this decision will "sound the death knell" for nuclear power in California (*PG&E* Pet. at 9) and petitioner Thornberry's purported concern about "the possibility that it will be applied on a national basis" (*PLF* Pet. at 14), could be taken seriously only if the

basic tenets of the Atomic Energy Act of 1954 were systematically ignored.

Congress never contemplated that the Atomic Energy Act of 1954 would deprive States of their right to determine whether (and to what extent) their energy needs should be met by nuclear power or by some other energy technology.[29] Indeed, the preservation of this traditional sphere of state authority was the manifest aim of Congress in including Sections 271 and 274(k) in the Act. 42 U.S.C. §§ 2018, 2021(k).[30] Moreover, Con-

[29] Even the utilities concede state "authority or responsibility to make decisions concerning the need for additional electric power generating capacity, the absolute or relative cost acceptability of a nuclear plant, electric power ratemaking, . . . [and] the sale or transmission of electric power produced by nuclear facilities." *PG&E* Pet. at 16–17. Of course, this kind of authority can be exercised most directly by any State choosing to perform itself all of the functions of an electric utility and to exercise all of the management prerogatives for planning and building new generating capacity. *Cf.* N.Y. Pub. Auth. Law § 1005 (establishing public power authority). Petitioners do not deny that any State could make such a choice and could thereupon limit, for any reason of state energy policy, the amount of public resources invested in nuclear power plants. On the other hand, the fact that the State's electrical energy supply is provided by state chartered utilities rather than a state agency obviously does not in itself evoke any limitation in the Atomic Energy Act upon the State's authority to direct choices of sites or selections among energy technologies.

[30] These provisions in themselves preclude any inference of "an intent to promote nuclear power at all costs" (App. at 42) merely from the broad statements of policy contained in the 1954 Act. Thus, notwithstanding Congress's intention in 1954 to encourage private industry to enter the nuclear field (*e.g.*, 42 U.S.C. § 2013(d)) or to direct the development of nuclear power "so as to promote world peace, improve the general welfare, increase the standard of living, and strengthen free enterprise" (*id.* § 2011), this Court only this term has refused to find federal preemption of state energy legislation merely on the basis of "general statements" of encouragement of an energy source in federal legislation. *Commonwealth Edison Co. v. Montana*, 101 S.Ct. 2946, 2962 (1981). The Court held that such general statements—in that case dealing with another energy source, coal—do not "demonstrate a congressional intent to preempt all state legislation that may have an adverse impact on the use of coal." *Id.*

gress has made clear in subsequent enactments that there is no national objective which favors the development and deployment of nuclear energy as a source of commercial electricity at the expense of any other considerations in a State's energy or environmental policy.[31] In light of the Clean Air Act Amendments of 1977, 42 U.S.C. §§ 7416, 7422, and the NRC Authorization Act for Fiscal Year 1980 (*see* note 8 supra), the actions California has taken here pale beside those a State could plainly take with Congress's blessing under these laws—even to the point of "keep[ing] nuclear plants from being built." App. at 43.

Given the many alternative means available to any State to restrict its reliance on nuclear power, petitioners' arguments gain nothing from the fact that more than one State has taken, or might choose to take, certain regulatory steps regarding nuclear power,[32] or that other States might choose to regulate in an "across-the-

---

[31] *See* Energy Reorganization Act, 42 U.S.C. §§ 5801, 5812 (1974); Department of Energy Reorganization Act, 42 U.S.C. § 7112 (1977). In *Exxon Corp. v. Governor of Maryland*, 437 U.S. 117 (1978), although the Court found a degree of tension between a state statute and "the central policy of the Sherman Act—our 'charter of economic liberty'," it sustained the state law, reasoning that "if an adverse effect on competition were, in and of itself, enough to render a state statute invalid, the States' power to engage in economic regulation would be effectively destroyed." *Id.* at 133. Just so, if a supposed congressional objective to promote the commercial deployment of nuclear power were given the preemptive effect urged by the utilities, the State's authority to engage in electrical energy regulation would be effectively destroyed.

[32] Contrary to the insinuation of petitioner Thornberry (*PLF* Pet. at 21), it was the district courts' egregious intrusions into areas of traditional state regulatory authority that accounted for the filing of over 20 state *amicus* briefs supporting California's position in the Ninth Circuit, and not "the potential of the ruling [California sought] to open the door to widespread obstruction" of nuclear power use. *Id.*

board" manner (*see PLF* Pet. at 14) rather than employing an *ad hoc* approach. In sum, the decision below merely reaffirms authority that the States have long possessed.

C. Nor Is Certiorari Warranted to Consider Hypothetical "Conflicts" Which Petitioners Adduce From the Inaction of the NRC.

Petitioners contend that preemptive force is to be given the NRC's determinations not to require more than one site in reactor license applications and not to suspend reactor licensing nationwide pending approval of a waste disposal technology. *PG&E* Pet. at 18–20; *PLF* Pet. at 13. Such contentions impermissibly equate (a) a federal policy not to attach certain conditions *nationally* to the commercial use of nuclear power by state-regulated utilities, with (b) a congressional determination that individual states may not *themselves* attach those conditions *locally* as a matter of state regulatory policy. *See New York Telephone Co. v. New York Labor Department,* 440 U.S. 519, 544–45 (1979) (opinion of Stevens, J., joined by White & Rehnquist, JJ.); *DeCanas v. Bica,* 424 U.S. 351, 360–61 (1976); *Kewanee Oil Co. v. Bicron Corp.,* 416 U.S. 470, 493 (1974).[33]

The NRC's mandate is to assure the safe operation of nuclear power plants from a radiation standpoint. *See, e.g., New Hampshire v. Atomic Energy Commission,* 406 F.2d 170 (1st Cir.), *cert. denied,* 395 U.S. 962 (1969). That the NRC can discharge this radiation protection responsibility without comparing several proposed sites for

[33] Petitioner Thornberry's reliance in this regard on *Ray v. ARCO,* 435 U.S. 151 (1978) (*PLF* Pet. at 13, 14) is transparently misplaced. As the Court there made clear, the fact that a facility is in compliance with federal law "does not mean that it is free to ignore otherwise valid state or federal rules or regulations." *Id.* at 168.

each nuclear plant from a land-use perspective explains why the NRC would require that an applicant provide only one acceptable site rather than the three demanded by California. Only a triumph of arithmetic over analysis could lead anyone to find proof of federal preemption in that disparity of numbers. Similarly, the NRC may continue to license nuclear plants prior to the development of a waste disposal technology in the belief that its safety mandate may be satisfied by the later shutdown of nuclear power plants if such disposal technology cannot be found in time. But the continued licensing of nuclear power plants in these circumstances is not necessarily consistent with a *State's* mandate to assure a dependable and efficient supply of electricity to its people—*precisely because* plant shutdowns might later have to be ordered by the NRC to fulfill its mandate. *See* note 12 *supra.*

Thus, no "conflict" whatever exists between the state statutes challenged here and any federal policy implemented by the NRC.

CONCLUSION

Despite its manifest importance to the State of California, the judgment below follows a wholly familiar legal path and breaks no new ground either as to the law of standing and ripeness or as to the preemptive reach of the Atomic Energy Act of 1954. Only by disregarding Congress's clear intent in Sections 271 and 274(k) could petitioners argue that the several States should be denied their long-standing authority to refuse to certify any given nuclear power plant because it is too costly, is not needed, or would be unreliable as a source of electricity. Unable to make *that* argument, petitioners inconsistently challenge either the very co-existence of

state and federal regulation dealing with electrical power generation by nuclear plants (*PG&E* Pet. at 9), or California's preference for making some aspects of its licensing determinations on a *generic* rather than *ad hoc* basis. *PLF* Pet. at 14. Although preserving that decision-making structure matters greatly to California as a sovereign State, doing so has no effect on anything Congress has decreed in the Atomic Energy Act of 1954. The Ninth Circuit's straightforward refusal to dismantle California's structure—especially in the setting of this largely hypothetical and wholly anticipatory attack on how the structure might someday be used—was too plainly mandated both by what Congress has expressly said, and by what courts have uniformly held, to warrant further

consideration by an already burdened Court. The petitions for certiorari should accordingly be denied.

Respectfully submitted,

LAURENCE H. TRIBE
Counsel of Record
Chief Appellate Counsel
1525 Massachusetts Ave.
Cambridge, MA 02138
(617) 495-4621

ROGER BEERS
KATHRYN BURKETT DICKSON
Special Counsel
380 Hayes Street, Suite One
San Francisco, CA 94102

WILLIAM M. CHAMBERLAIN
General Counsel
DIAN GRUENEICH
Deputy General Counsel
California Energy Resources
Conservation and
Development Commission
1111 Howe Avenue
Sacramento, CA 95825

Counsel for Respondents *

RALPH CAVANAGH
Natural Resources Defense
Council, Inc.
25 Kearny Street
San Francisco, CA 94108
Counsel for Respondents-Intervenors

---

* Respondents acknowledge the assistance of David H. Remes and Jonathan Hulbert in the preparation of this response.

Petitioner's Reply Brief

Office - Supreme Court, U.S.
FILED
JUN 4 1982
ALEXANDER L. STEVAS,
CLERK

No. 81-1945
IN THE

Supreme Court of the United States

October Term, 1981

PACIFIC GAS AND ELECTRIC COMPANY and SOUTHERN CALIFORNIA EDISON COMPANY,

Petitioners,

vs.

STATE ENERGY RESOURCES CONSERVATION AND DEVELOPMENT COMMISSION, *et al.*,

Respondents.

On Petition for a Writ of Certiorari to the United States Court of Appeals for the Ninth Circuit.

PETITIONERS' REPLY BRIEF.

JOHN R. MCDONOUGH,
HOWARD B. SOLOWAY,
Counsel of Record,
BALL, HUNT, HART, BROWN AND BAERWITZ,
450 North Roxbury Drive,
Beverly Hills, Calif. 90210,
(213) 278-1960,
Attorneys for Petitioners.

Parker & Son, Inc., Law Printers, Los Angeles. Phone 724-6622

TABLE OF CONTENTS

	Page
Petitioners' Reply Brief	1

TABLE OF AUTHORITIES

Constitution

California Constitution, Art. III, Sec. 3.5	6

Statutes

California Public Resources Code, Sec. 25000 et seq.	2
California Public Resources Code, Sec. 25500	2
California Public Resources Code, Sec. 25502	2
California Public Resources Code, Sec. 25504	2
California Public Resources Code, Sec. 25511	2
California Public Resources Code, Sec. 25512	2
California Public Resources Code, Sec. 25514	2
California Public Resources Code, Sec. 25516	2
California Public Resources Code, Sec. 25517	2
California Public Resources Code, Sec. 25519	2
California Public Resources Code, Sec. 25520	2
California Public Resources Code, Sec. 25523	2
California Public Resources Code, Sec. 25524.1(b)	2
California Public Resources Code, Sec. 25524.2	2
California Public Resources Code, Sec. 25532	2
United States Code, Title 42, Sec. 2018	2
United States Code, Title 42, Sec. 2021(k)	2

No. 81-1945

IN THE

Supreme Court of the United States

October Term, 1981

PACIFIC GAS AND ELECTRIC COMPANY and SOUTHERN CALIFORNIA EDISON COMPANY,

Petitioners,

vs.

STATE ENERGY RESOURCES CONSERVATION AND DEVELOPMENT COMMISSION, *et al.*,

Respondents.

PETITIONERS' REPLY BRIEF.

I.

The Consolidated Response of the California State Energy Commission and others ("Respondents") to the Petition for Certiorari herein does not refute but strengthens the case for review by this Court of the decision of the Court of Appeals for the Ninth Circuit. Respondents deny that the Atomic Energy Act has the preemptive effect claimed by petitioners and by *amicus curiae* the United States, the Atomic Industrial Forum, Edison Electric Institute and The Legal Foundation of America. Respondents boldly assert the right of California and other states to prohibit, delay and extensively regulate the construction and operation of nuclear power plants, despite the long-standing federal policy to encourage the private development of nuclear power under the regulatory supervision of the Nuclear Regulatory Commission

("NRC"). Respondents take a substantially different view than do petitioners and *amicus curiae* of the effect to be given Title 42 §§ 2018 and 2021(k), provisions never interpreted by this Court. The authoritative resolution by this Court *at this time* of the issues thus joined is of the greatest importance for the parties, the NRC, the several states, the electric power industry, and the future of the nation.

II.

Petitioners respectfully disagree with the view of the United States that a writ of certiorari issued in this case should be limited to determining whether Cal.Pub.Res. Code §§ 25524.1(b) and 25524.2 are preempted by the Atomic Energy Act. The writ should also bring to this Court for decision the question whether the Atomic Energy Act preempts the other provisions of California's Warren-Alquist Act, Cal.Pub.Res. Code § 25000, *et seq.*, which the District Court held invalid. The United States is rightly concerned that if §§ 25524.1(b) and 25524.2 are upheld, the federal purpose of encouraging the development of nuclear power will be frustrated and the ability of the NRC to regulate will be compromised. Similarly, if the other of the California nuclear laws are not declared void, the federal purpose will be frustrated and federal regulation will be compromised.

At the heart of the matter is the validity under the Atomic Energy Act of the California "certification system statutes" challenged by petitioners (Cal.Pub.Res. Code §§ 25500, 25502, 25504, 25511, 25512, 25514, 25516, 25517, 25519, 25520, 25523 and 25532). These statutes purport to authorize the State Energy Commission, acting in effect as a "little NRC," to determine whether, where and how California nuclear power plants may be constructed and operated—the very matters which Congress has given the NRC

both authority and responsibility to determine for California as for the rest of the nation.

To determine whether the certification system statutes and the other provisions of the Warren-Alquist Act challenged in this action are ripe for review this Court must, petitioners submit, give consideration to

— the scope of the Atomic Energy Act and its implementing regulations, to determine the reach of the regulatory field they preempt and of the Congressional policy they reflect;

— the breadth of the challenged provisions of the Warren-Alquist Act, to determine the extent to which they invade the preempted field and conflict with the federal statute and policy; and

— the stultifying effect which a reprieve from adjudication of these California statutes will have on the construction of new nuclear power plants in California, and elsewhere in the nation, and thus on the national policy of encouraging the construction and operation of nuclear power plants.

Petitioners respectfully submit that such a determination cannot be made at this time, on the record now before the Court and in the limited time practicably available to determine the scope of a writ of certiorari to be granted in this case, but rather should be made on plenary review after the writ is granted.

The ripeness for adjudication of the validity of the certification system statutes is clearly established insofar as petitioner PGandE is concerned by the following findings of the District Court, all of which are fully supported by the trial testimony of PGandE's principal executives:

> 15. In the early 1970's PGandE determined to construct a nuclear power plant known as the Stanislaus Nuclear Power Plant (''the Stanislaus project''), to

consist of two 1200-megawatt units then intended to be operational in the late 1980's. As of August 30, 1977, PGandE had expended at least $10,000,000 and (sic) the Stanislaus project. On August 30, 1977, PGandE filed with defendant commission a notice of intention to file an application for certification of the Stanislaus project ("the NOI"). The NOI was rejected by defendant commission on September 29, 1977, on the ground (stated in the commission's rejection letter and subsequently elaborated in its "Data Adequacy Report") that the NOI was required to contain much additional information, including a substantial amount of data concerning and relating to radiological safety of the Stanislaus project. Much of the required information concerned matters which fall within the regulatory jurisdiction of the NRC.

* * *

17. In mid-1978, PGandE suspended the Stanislaus project. This action reflected a consensus reached by senior management of PGandE, based on the events set forth in Findings Nos. 8, 9, 10, 11, 15 and 16 above, that the provisions of the Public Resources Code challenged herein made it impossible, as a practical matter, for PGandE to spend and commit the funds necessary to proceed with the Stanislaus project unless and until those statutes are declared invalid, for two principal reasons First, PGandE's management concluded that Public Resources Code §§ 25524.1, 25524.2, and 25524.3, taken in conjunction with defendant commission's January 25, 1978 decision and the January 11, 1978 Report of its Nuclear Fuel Cycle Committee, create an unreasonable risk that defendant commission would not grant certification to Stanislaus on a timely basis or at all. *Second, and particularly in light of defendant commission's intention, in processing the Stanislaus NOI, to require PGandE to furnish infor-*

mation concerning matters within the regulatory jurisdiction of the NRC, PGandE's management concluded that the challenged provisions of the Warren-Alquist Act impose substantial burdens of time and expense upon PGandE and, more importantly, create a substantial risk of conflicting determinations pertaining to the same issues between defendant commission and the NRC, which would preclude or substantially delay governmental approval of the Stanislaus project.

18. As reconfirmed in September, 1977 by PGandE's management committee, the executive committee of PGandE's board of directors, and PGandE's board of directors, PGandE's policy is that *(a) so long as the California statutes challenged herein remain operative, PGandE will have no real choice but to continue suspension of the Stanislaus nuclear power plant project and defer indefinitely consideration of additional nuclear power plants; and (b) if the California statutes are judicially determined to be invalid, PGandE will, barring unforeseen circumstances, reactivate the Stanislaus project and once again consider additional nuclear power plants among the electric power generating resources necessary to meet the future demand of PGandE's customers and the public in its service area.*

* * *

Appendix at 72-74.

The District Court made similar findings in respect of petitioner Edison (Findings 20, 21 and 22, Appendix at 75-76).

On the basis of these findings of the District Court, all *affirmed* by the Court of Appeals, there is at the very least a strong *prima facie* case that the very existence of the certification system statutes and the authority they grant the

State Energy Commission defeats in California the Congressional policies reflected in the Atomic Energy Act and conflicts with the plenary authority of the NRC to regulate the construction and operation of nuclear power plants to achieve the national objectives so compellingly articulated in the brief of the United States as *amicus curiae*.

It is clear on the record before this Court that unless and until the California certification system statutes are reviewed and at least largely invalidated, petitioners will not again undertake to build nuclear power plants in California. Accordingly, there will never be an occasion for this Court to review the validity of the certification system statutes after their application by the State Energy Commission in a nuclear power plant licensing proceeding.* This is because petitioners cannot, as a matter of prudent business judgment, undertake the enormous expense and the risks—both of California noncertification and of conflicting decisions and directives of the NRC and the State Energy Commission—that would be created by parallel federal and state licensing proceedings.

To put the matter bluntly: the occasion for review of the validity of the California certification system statutes is now—or it is never. Surely under these circumstances both the issue of ripeness and the issue of validity of all the

---

*The validity of the certification system statutes as applied to nuclear power plants cannot be challenged in proceedings before the State Energy Commission (Cal. Const., Art. III, § 3.5).

California nuclear laws challenged herein should be decided by this Court only after plenary review of the Court of Appeals' decision and of the record on which it is based.

Respectfully submitted,

JOHN R. MCDONOUGH,
HOWARD B. SOLOWAY,
Counsel of Record,
BALL, HUNT, HART, BROWN
AND BAERWITZ,
Attorneys for Petitioners.

Amicus Brief

1

REPRODUCED BY THE CLERK'S OFFICE

Office - Supreme Court, U
FILED
MAY 20 1982
ALEXANDER L. STEVAS
CLERK

Nos. 81-1944 & 81-1945

IN THE

Supreme Court of the United States

OCTOBER TERM, 1981

PACIFIC LEGAL FOUNDATION *et al.*, *Petitioners*,

v.

STATE ENERGY RESOURCES CONSERVATION AND DEVELOPMENT COMMISSION, *et al.*, *Respondents*.

PACIFIC GAS AND ELECTRIC COMPANY and SOUTHERN CALIFORNIA EDISON COMPANY, *Petitioners*,

v.

STATE ENERGY RESOURCES CONSERVATION AND DEVELOPMENT COMMISSION, *et al.*, *Respondents*.

On Petitions For Writs Of Certiorari To The United States Court Of Appeals For The Ninth Circuit

---

BRIEF OF THE ATOMIC INDUSTRIAL FORUM AS AMICUS CURIAE IN SUPPORT OF PETITIONS FOR WRITS OF CERTIORARI

LEONARD M. TROSTEN
Counsel of Record
EUGENE R. FIDELL
DANIEL J. CONWAY
LEBOEUF, LAMB, LEIBY & MACRAE
Suite 1100
1333 New Hampshire Ave., N.W.
Washington, D.C. 20036
(202) 457-7500
Attorneys for Amicus Curiae

LINDA L. HODGE
Staff Counsel
ATOMIC INDUSTRIAL FORUM, INC.
7101 Wisconsin Avenue
Washington, D.C. 20014

May 1982

PRESS OF BYRON S. ADAMS PRINTING, INC., WASHINGTON, D.C.

TABLE OF CONTENTS

	Page
INTEREST OF THE ATOMIC INDUSTRIAL FORUM	2
STATEMENT	3
SUMMARY OF ARGUMENT	6
ARGUMENT	6
A. The Ninth Circuit's Decision Raises An Important Issue Of Federal-State Relations That Is Of National Scope	6
B. The Ninth Circuit's Decision Fails To Weigh Properly The Competing Federal-State Interests And Is At Odds With Prior Decisions Of This Court	12
CONCLUSION	19

TABLE OF AUTHORITIES

CASES:	Page
Bibb v. *Navajo Freight Lines, Inc.*, 359 U.S. 520 (1959)	13
City of Philadelphia v. *New Jersey*, 437 U.S. 617 (1978)	14
Commonwealth Edison Co. v. *Montana*, 453 U.S. 609 (1981)	7
Duke Power Co. v. Carolina Environmental Study Group, Inc., 438 U.S. 59 (1978)	10, 17
Exxon Nuclear Co. (Nuclear Fuel Recovery and Recycling Center), 6 N.R.C. 873 (1977)	9
FERC v. *Mississippi*, 452 U.S. 936 (1981) (No. 81-1749) (noting probable jurisdiction)	7
Jones v. *Rath Packing Co.*, 430 U.S. 519 (1977)	18
Kassel v. *Consolidated Freightways Corp. of Delaware*, 450 U.S. 662 (1981)	13
Maryland v. *Louisiana*, 451 U.S. 725 (1981)	6
Natural Resources Defense Council, Inc. v. *NRC*, 539 F.2d 824 (2d Cir. 1976), *vacated and remanded sub nom. Westinghouse Electric Corp.* v. *Natural Resources Defense Council, Inc.*, 434 U.S. 1030 (1978)	4
New England Power Co. v. *New Hampshire*, 102 S.Ct. 1096 (1982)	7
Northern States Power Co. v. *Minnesota*, 447 F.2d 1143 (8th Cir. 1977), *aff'd mem.*, 405 U.S. 1035 (1972)	13, 15, 17
Pacific Legal Foundation v. *State Energy Resources Conservation and Development Commission*, 659 F.2d 903 (9th Cir. 1981)	2
Perez v. *Campbell*, 402 U.S. 637 (1971)	12, 13, 14
Raymond Motor Transportation, Inc. v. *Rice*, 434 U.S. 429 (1978)	13
Train v. Colorado Public Interest Group, Inc., 426 U.S. 1 (1976)	8
Vermont Yankee Nuclear Power Corp. v. *Natural Resources Defense Council, Inc.*, 435 U.S. 519 (1978)	8

Table of Authorities Continued

Page

FEDERAL STATUTES:

Atomic Energy Act of 1954, 42 U.S.C. 2011-2284 (1976 & Supp. IV 1980) ..... *passim*
42 U.S.C. § 2011 (1976) 13
42 U.S.C. § 2012(a) (1976) 8, 13
42 U.S.C. § 2013(a) (1976) 8
42 U.S.C. § 2013(c) (1976) 8
42 U.S.C. § 2013(d) (1976) 7, 8
42 U.S.C. § 2018 (1976) 14
42 U.S.C. § 2021 (1976 & Supp. IV 1980) 15
42 U.S.C. § 2021(b) (1976 & Supp. IV 1980) 9
42 U.S.C. § 2021(c) (1976 & Supp. IV 1980) 14
42 U.S.C. § 2021(d) (1976 & Supp. IV 1980) 9
42 U.S.C. § 2021(f) (1976) 9
42 U.S.C. § 2021(g) (1976) 9
42 U.S.C. § 2021(i) (1976) 9
42 U.S.C. § 2021(j) (1976 & Supp. IV 1980) 9
42 U.S.C. § 2021(m) (1976) 9
42 U.S.C. § 2133 (1976 & Supp. IV 1980) 8
42 U.S.C. § 2232 (1976) 8
42 U.S.C. § 2235 (1976) 8
42 U.S.C. § 2239 (1976 & Supp. IV 1980) 8
42 U.S.C. § 2239(a) (1976 & Supp. IV 1980) 9
Clean Air Act, 42 U.S.C. § 7422 (Supp. IV 1980) 10
Energy Policy and Conservation Act of 1975, 42 U.S.C. § 6201(6) (1976) 7
Energy Reorganization Act of 1974, Pub. L. No. 93-438, § 104, 88 Stat. 1237 (1974) 10
Federal Nonnuclear Energy Research and Development Act of 1974, 42 U.S.C. §§ 5901-20 (1976 & Supp. IV 1980) 10
Federal Power Act, 16 U.S.C. § 824(b) (1976 & Supp. IV 1980) 7

Table of Authorities Continued

	Page
Industrial Fuel Use Act, 42 U.S.C. § 8302(a)(6)(A) (Supp. IV 1980)	10
National Environmental Policy Act of 1969, 42 U.S.C. §§ 4321-70 (1976 & Supp. IV 1980)	9
NRC Appropriation Authorization Act of 1980, Pub. L. No. 96-295, § 108(f), 94 Stat. 780 (1980)	10
Power Plant and Industrial Fuel Use Act of 1978, 42 U.S.C. § 8301(b)(3) (Supp. IV 1980)	7
Price-Anderson Act of 1957, 42 U.S.C. § 2012, 2210 (1976)	10
Public Utility Regulatory Policies Act of 1978, 16 U.S.C. §§ 2601-45 (Supp. IV 1980)	7
FEDERAL REGULATIONS:	
10 C.F.R. § 2.101 (1981)	9
10 C.F.R. § 2.105 (1981)	9
10 C.F.R. § 2.714 (1981)	9
10 C.F.R. § 2.715(c) (1981)	9
10 C.F.R. § 2.721 (1981)	9
10 C.F.R. § 2.786 (1981)	9
10 C.F.R. § 2.787 (1981)	9
10 C.F.R. § 50.30(f) (1981)	9
10 C.F.R. § 50.33 (1981)	9
10 C.F.R. § 50.33a (1981)	9
10 C.F.R. § 50.34(a) (1981)	9
10 C.F.R. § 51.22 (1981)	9
10 C.F.R. § 51.23(b) (1981)	9
10 C.F.R. § 51.24(b) (1981)	9
10 C.F.R. § 51.26 (1981)	9
10 C.F.R. Pt. 2 App. A § V (1981)	9
10 C.F.R. Pts. 20-170 (1981)	9
CONGRESSIONAL MATERIALS:	
100 Cong. Rec. 12015 (1954)	14
S. Rep. No. 1699, 83d Cong., 2d Sess. 1-4 (1954)	8

Table of Authorities Continued

Page

STATE STATUTES:

Cal. Pub. Res. Code (West 1977)

§ 25500 4
§ 25502 4
§ 25503 4
§ 25504 ..... 4, 15
§ 25506.5 15
§ 25509 15
§ 25511 ..... 4, 16
§ 25512 4
§ 25514 4
§ 25516 4
§ 25517 4
§ 25519 4
§ 25520 ..... 4, 17
§ 25523 4
§ 25524.1 4
§ 25524.2 4
§ 25524.3 ..... 4, 5
§ 25528 4
§ 25532 4

Conn. Gen. Stat. Ann. §§ 22a-136 & 137 (West Supp. 1981) 11
Ga Code Ann. § 88-1306 (Supp. 1981) 11
Hawaii Const. art. XI § 8 (1978) 11
Ill. Ann. Stat. ch. 111½ § 230.22 (Smith-Hurd Supp. 1981-82) 11
La. Rev. Stat. Ann. § 30-1111 (West Supp. 1982) 11
Me. Rev. Stat. Ann. tit. 10 §§ 251-56 (1980) 11
Md. Ann. Code art. 78, § 54A (Supp 1981) 11
Mich. Comp. Laws Ann. § 325.491 (West Supp. 1981-82) . 11
Minn. Stat. Ann. §§ 116C.72-.73 (West Supp. 1982) 11
Miss Code Ann. §§ 17-17-48 to -51 (Supp. 1981) 11

Table of Authorities Continued

Page

Mont. Code Ann. §§ 75-20-1201 to -05 (1979) 11

N.H. Rev. Stat. Ann. §§ 125.77b-:77f (Supp. 1979) 11

N.M. Stat. Ann. § 74-4A-11.1 (1981) 11

N.Y. Pub. Auth. Law § 1854-a (McKinney 1981) 11

Act of July 1, 1979, ch. 510, 1979 Or. Laws 11

R.I. Gen. Laws § 42-64-14.1 (1977) 11

Vt. Stat. Ann. tit. 10 §§ 6501-06 (Supp. 1981) 11

Vt. Stat. Ann. tit. 30 § 248(c) (Supp. 1981) 11

Wash. Rev. Code Ann. §§ 70.99.010-.910 (West Supp. 1982) 11

Wash. Rev. Code Ann. § 80.50.100 (Supp. 1981) 11

W. Va. Code § 16-27-2 (West. 1981) 11

MISCELLANEOUS:

Advance Plans for Construction of Facilities, Findings of Fact and Conclusions of Law, [1964-81 New Developments Transfer Binder] Nuclear Reg. Rep. (CCH) ¶ 20,093 (Wis. Pub. Serv. Comm'n Aug. 17, 1978) 11

Cal. Assembly Comm'n on Resources, Land Use and Energy, *Reassessment of Nuclear Energy in California: A Policy Analysis of Proposition 15 and Its Alternatives* (1976) 5, 16

Cohen, *Innovation and Atomic Energy: Nuclear Power Regulation, 1966-Present*, 43 Law & Contemp. Probs. 67 (1979) 17

NRC, *Information Report on State Legislation, Radioactive Waste Disposal and Management* (Spec. ed. Dec. 1981) 11

N.Y.C. Health Code § 175.111(1) (1976) 11

President's Statement Announcing a Series of Policy Initiatives, 17 Weekly Comp. Pres. Doc. 1101 (Oct. 8, 1981) 8

Tribe, *California Declines the Nuclear Gamble: Is Such a State Choice Preempted?* 7 Ecol. L. Q. 679 (1979) 12

IN THE

Supreme Court of the United States

OCTOBER TERM, 1981

Nos. 81-1944 & 81-1945

PACIFIC LEGAL FOUNDATION *et al.*, *Petitioners*,

v.

STATE ENERGY RESOURCES CONSERVATION AND DEVELOPMENT COMMISSION, *et al.*, *Respondents*.

PACIFIC GAS AND ELECTRIC COMPANY and SOUTHERN CALIFORNIA EDISON COMPANY, *Petitioners*,

v.

STATE ENERGY RESOURCES CONSERVATION AND DEVELOPMENT COMMISSION, *et al.*, *Respondents*.

On Petitions For Writs Of Certiorari To The United States Court Of Appeals For The Ninth Circuit

---

BRIEF OF THE ATOMIC INDUSTRIAL FORUM AS AMICUS CURIAE IN SUPPORT OF PETITIONS FOR WRITS OF CERTIORARI

In accordance with this Court's Rule 36, the Atomic Industrial Forum ("the Forum") has received and filed with this Court the written consents of counsel for each of the parties to appear as *amicus curiae* in this proceeding. This brief is submitted by the Forum in support of the petitions for certiorari filed by the Pacific Legal Foundation ("PLF"), Pacific Gas and Electric Company ("PG&E") and the Southern California Edi-

son Company ("SCE") seeking review of the Ninth Circuit's decision in *Pacific Legal Foundation* v. *State Energy Resources Conservation and Development Commission*, 659 F.2d 903 (9th Cir. 1981) (PG&E App. 1-52).[1]

INTEREST OF THE ATOMIC INDUSTRIAL FORUM

The Forum is an association of approximately six hundred domestic and overseas organizations involved in the peaceful uses of nuclear energy. The membership includes electric utilities, manufacturers, architect/engineer/construction firms, service organizations, consultants, uranium producers, radionuclide and radiopharmaceutical suppliers, financial institutions, universities, labor unions, government agencies and research laboratories.

Unless this Court grants certiorari, reverses the Ninth Circuit's decision and restores the congressionally-determined balance between federal and state interests in the regulation of nuclear facilities, continued progress in the development of nuclear power as an energy option will, as a practical matter, be outlawed in California and every other jurisdiction that follows its lead. The Ninth Circuit's decision will encourage additional, burdensome and unnecessary state regulation of existing nuclear facilities, endangering the level of nuclear development thus far achieved. Until this Court speaks to the proper accommodation of the competing governmental interests, the congressional program will be thwarted and the nuclear industry will be exposed to the already apparent centrifugal state and local forces which are encouraged under the Court of Appeals' ruling.

State prohibitions on nuclear development have serious consequences for the Forum's members. One hundred and five of

[1] Citations to the decisions below are to the Appendix to PG&E's Petition, which is cited as "PG&E App." Citations to the PLF Appendix are indicated "PLF App." The PG&E Petition is cited "PG&E Pet."

the Forum's 122 domestic electric operating utility members rely on, or plan in the future to rely on, nuclear power generation for at least a portion of their power needs. State and local moratoria on nuclear development will also be a severe blow to Forum members involved in all phases of construction and operation of nuclear facilities including each stage of the fuel cycle. Although the future of atomic energy is of vital concern to the nuclear industry, that is, of course, only a small part of the picture. The continued availability of the nuclear option is vital to the entire Nation as a means — with other energy sources that are or may become available — of reducing domestic vulnerability to undependable foreign sources of oil and gas. California's legislation disregards these larger considerations.

STATEMENT

The Ninth Circuit held that the Atomic Energy Act of 1954, as amended ("1954 Act"),[2] does not preempt a California moratorium on the certification of new nuclear power plants pending state determination that the federal government has approved of, and that there in fact exists, a demonstrated radioactive waste disposal technology. PG&E App. 37-40. This holding was based solely on the state's assertion that the law in question was not intended as a regulation of radiation hazards. *Id.* 35, 40. The Ninth Circuit's decision raises an important question of federal-state relations: whether a state, consistent with the supremacy clause, may outlaw an activity strictly regulated by the federal government and serving an important federal purpose simply by asserting that the state is motivated by some other purpose allowed by federal law.

The Ninth Circuit reversed two district courts in rejecting a challenge to California's regulation of the building and siting of nuclear facilities. At issue was California's complex two-step

---

[2] 42 U.S.C. §§ 2011-2284 (1976 & Supp. IV 1980).

procedure for certification of new power plants [3] administered by the State Energy Resources Conservation & Development Commission ("Energy Commission"), the respondent in this Court. PG&E App. 20. Objection was also made to: (1) the requirement that an applicant for certification acquire land development rights to assure safe population densities around a proposed plant; and (2) the requirement that an applicant propose at least three alternate sites for a proposed plant. Cal. Pub. Res. Code §§ 25528, 25503 (West 1977); PG&E App. 196, 217.

Three other challenged sections specifically condition the certification of nuclear plants. Cal. Pub. Res Code §§ 25524.1, 25524.2, 25524.3 (West 1977). Section 25524.1(a) imposes a moratorium on certification of proposed nuclear plants that would use reprocessed fuel [4] until "[t]he commission finds that there has been developed and that the United States through its authorized agency has identified and approved, and there exists a technology for construction and operation of nuclear fuel rod reprocessing." This determination, if ever made, may be overruled by the state legislature. PG&E App. 207-08. Section 25524.1(b) requires a case-by-case analysis of whether a proposed plant's spent fuel storage capacity is adequate before certification. PG&E App. 208.

Section 25524.2 imposes a moratorium on certification of new nuclear plants until "[t]he commission finds that there has

---

[3] Cal. Pub. Res.Code §§ 25500, 25502, 25504, 25511, 25512, 25514, 25516, 25517, 25519 25520, 25523, 25532 (West 1977), reproduced in PG&E App. 193-219. In the case brought by PLF, only the nuclear waste moratorium, § 25524.2, was at issue in the Court of Appeals. PG&E App. 6-7.

[4] Fuel reprocessing involves recovering unused fissionable material from spent fuel. For a description of the process see *Natural Resources Defense Council, Inc.* v. *NRC*, 539 F.2d 824, 830-31 (2d Cir. 1976), *vacated and remanded sub nom. Westinghouse Electric Corp.* v. *Natural Resources Defense Council, Inc.*, 434 U.S. 1030 (1978).

been developed and that the United States through its authorized agency has approved and there exists a demonstrated technology or means for the [permanent] disposal of high-level nuclear waste." The Energy Commission's determination that a federal plan has been enacted and that the necessary technology has been demonstrated may also be overruled by the legislature. PG&E App. 210-12.

Section 25524.3 imposes a moratorium on the construction of nuclear power plants until the Energy Commission has determined whether nuclear reactors should, in its opinion, "be either underground or berm contained."[5] As is the case with the other two moratorium provisions, the Energy Commission's decision may be reversed by the legislature.

The Ninth Circuit dismissed the challenges to the certification procedure, the development rights procurement requirement, the fuel reprocessing moratorium, and the spent fuel rod storage provision as not ripe for judicial consideration. PG&E App. 20-25. The challenge to the containment report moratorium was rejected because, in the Ninth Circuit's view, the issue was mooted by submission of the containment report to the legislature. *Id.* at 25.

The Court of Appeals held that the challenges to the nuclear waste moratorium and the three-site requirement were ripe for review. PG&E App. 23, 25-27. Both provisions were sustained. The court accepted the state's assertion that the nuclear waste moratorium was not intended to regulate radiation

---

[5] "Berm containment" requires building a nuclear plant in an excavated pit and backfilling with dirt. It is a "cut and cover" technique intended "to increase the margin of safety in the event of an accident which breaches the containment building." PG&E App. 6 n.8, *quoting* Cal. Assembly Comm'n on Resources, Land Use and Energy, *Reassessment of Nuclear Energy in California: A Policy Analysis of Proposition 15 and its Alternatives* 155 (1976).

hazards, and thus concluded that the provision was not preempted by the 1954 Act. PG&E App. 37. The three-site provision was deemed a legitimate exercise of the state's zoning authority, which did not have the purpose of regulating radiation hazards. PG&E App. 40-42.

SUMMARY OF ARGUMENT

The California legislation sustained by the Ninth Circuit is another in a growing series of state laws that conflict with federal energy policy. The Ninth Circuit decided incorrectly an important question of federal-state relations by uncritically accepting the state's self-serving claim as to the purpose of its nuclear laws. A decision by this Court is necessary to define the extent to which state regulation of nuclear energy is preempted by the 1954 Act.

ARGUMENT

A.

The Ninth Circuit's Decision Raises An Important Issue Of Federal-State Relations That Is Of National Scope

The challenged California statutes present yet another example of the centrifugal tendencies pitting state and federal energy policies against one another. As our society has come to focus on the limited range of available energy sources, the states have, with increasing fervor, sought to advance their own policy judgments and obtain parochial advantage at the expense of expressed national goals concerning the use, allocation and development of alternative energy sources.

This conflict has manifested itself in several cases recently decided by this Court. For example, last Term this Court held that Louisiana could not impose a first use tax on natural gas flowing through the state from the outer continental shelf because the tax interfered with federal regulation of gas cost allocation and because the tax constituted an unreasonable burden on interstate commerce. *Maryland* v. *Louisiana*, 451

U.S. 725 (1981). Also last Term, this Court considered whether Montana's severance tax on coal was preempted by the Energy Policy and Conservation Act of 1975, 42 U.S.C. § 6201(6) (1976), and the Powerplant and Industrial Fuel Use Act of 1978, 42 U.S.C. § 8301(b)(3) (Supp. IV 1980). *Commonwealth Edison Co.* v. *Montana*, 453 U.S. 609 (1981).

This Term, a New Hampshire statute prohibiting the export of hydroelectric energy was held to be unconstitutional because section 201(b) of the Federal Power Act, 16 U.S.C. § 824(b) (1976 & Supp. IV 1980), does not confer on the states authority to regulate interstate sales of energy beyond the limits set by the Commerce Clause. *New England Power Co.* v. *New Hampshire*, 102 S.Ct. 1096 (1982). Presently before this Court is another state's tenth amendment challenge to provisions of the Public Utility Regulatory Policies Act of 1978, 16 U.S.C. § 2601-45 (Supp. IV 1980), which allows the Federal Energy Regulatory Commission an expanded role in the regulation of intrastate electric rates. *FERC* v. *Mississippi*, 452 U.S. 936 (1981) (No. 81-1749) (noting probable jurisdiction).

The federal-state conflict presented by these petitions is no less important — and no less in need of definitive resolution — than those raised in the cases cited above. Federal regulation of nuclear energy, along with the other federal energy regulatory laws, is intended to assure adequate, dependable energy for the entire nation. Just as it was necessary for this Court to consider the important federal-state relations questions in the areas of gas, coal and hydroelectric energy regulation, so too, consideration should be given to the proper accommodation of these interests in the nuclear regulatory field.

The 1954 Act serves an important federal interest seeking "to encourage widespread . . . development and utilization of atomic energy for peaceful purposes to the maximum extent consistent with the common defense and security and with the health and safety of the public." 42 U.S.C. § 2013(d) (1976).

Congress viewed the development and use of nuclear energy "for military and for all other purposes" as "vital to the common defense and security" of the country. *Id.* § 2012(a). Congress intended to establish "a program of conducting, assisting, and fostering research and development in order to encourage maximum scientific and industrial progress" regulated by "a program for Government control of the possession, use, and production of atomic energy and special nuclear material. . . ." *Id.* § 2013(a), (c)-(d); *see also* S. Rep. No. 1699, 83d Cong., 2d Sess. 1-4 (1954).[6]

None of the federal energy regulatory programs referred to above is nearly as detailed as that created by the 1954 Act. The Nuclear Regulatory Commission ("NRC") pervasively regulates the nuclear industry.[7] *Train* v. *Colorado Public Interest Research Group, Inc.*, 426 U.S. 1, 24 (1976); *Vermont Yankee Nuclear Power Corp.* v. *Natural Resources Defense Council, Inc.*, 435 U.S. 519, 525-27 (1978). Under the 1954 Act, an entity seeking to construct and operate a nuclear production or utilization facility must obtain from the NRC separate licenses for construction and operation of the project. 42 U.S.C. §§ 2133, 2232, 2235, 2239 (1976 & Supp. IV 1980). The licensing procedures entail multileveled review with extensive opportunities for state and public participation, and exhaustive consideration of technical, safety and environmental issues.

---

[6] These congressional objectives have obtained Executive approval. In announcing a series of initiatives for expanded use of nuclear energy, President Reagan has emphasized that nuclear energy's contribution is essential to the economic well-being of the Nation. President's Statement Announcing a Series of Policy Initiatives, 17 Weekly Comp. Pres. Doc. 1101 (Oct. 8, 1981).

[7] Ironically, the concurring opinion below emphasizes that the NRC's "oversight is clearly intended to be comprehensive," and that Congress' "goal of bringing to the field of nuclear energy a single, expert, public agency to interpret and carry out the provisions of the [1954 Act]" should not be interfered with by the courts. PG&E App. 52. Quite obviously, that goal is thwarted just as severely by interference from the states.

See 42 U.S.C. §§ 2239(a), 4321-69 (1976 & Supp. IV 1980); 10 C.F.R. §§ 2.101, 2.105, 2.714, 2.721, 2.786, 2.787, 50.30(f), 50.33, 50.33a, 50.34(a), 51.22-26; 10 C.F.R. Pt. 2 App. A § V (1981). In addition, the NRC closely regulates standards for radiation protection, the possession, packaging and transportation of radioactive materials, medical uses of nuclear materials, reactor siting, physical protection of reactors, and financial protection requirements. 10 C.F.R. Pts. 20-170 (1981).

The states may and generally do participate fully in the federal regulatory process, even though they may well lack the staff depth necessary to address the more technical issues of radiological safety. During each phase of a project licensing proceeding, interested states are permitted to participate as a matter of right. 10 C.F.R. § 2.715(c) (1981). Participation as of right is not limited to the site location state or even adjacent states. For example, California participated in a licensing proceeding for a fuel cycle facility as far away as Tennessee, *Exxon Nuclear Co. (Nuclear Fuel Recovery and Recycling Center)*, 6 N.R.C. 873 (1977), thus underscoring the fact that nuclear industrial activity involves interests that are truly national and do not stop at state boundaries. States are also accorded ample opportunity to contribute to the environmental review of nuclear power plant construction and operation under the National Environmental Policy Act of 1969, 42 U.S.C. § 4321-70 (1976 & Supp. IV 1980); 10 C.F.R. §§ 51.23(b), 51.24(b), 51.26 (1981). Finally, states may — by agreement with the NRC and subject to NRC standards — regulate low level nuclear materials. 42 U.S.C. § 2021(b), (d), (f), (g), (i), (j) and (m) (1976 & Supp. IV 1980).

Congress has not altered its views as to the need for further development of nuclear energy in order to assure that the

Nation's energy needs will be met.[8] A number of states, unfortunately — despite Congress' goal and the generous role afforded them under the federal regulatory scheme — have seen fit to decide individually whether use of nuclear energy should be permitted. The resulting frustration of Congress' goal to achieve uniform regulation and to encourage nuclear energy is national in scope. Currently, in addition to California, at least

---

[8] Subsequent to the 1954 Act, Congress reaffirmed the importance of nuclear development by enacting the Price-Anderson Act of 1957, 42 U.S.C. §§ 2012, 2210, which "had the dual purpose of protect[ing] the public . . . and encourag[ing] the development of the atomic energy industry." *Duke Power Co.* v. *Carolina Environmental Study Group, Inc.*, 438 U.S. 59, 64 (1978). Congressional intent to further nuclear development was reiterated twice with extension of the Price-Anderson Act in 1965 and 1975.

Passage of the Energy Reorganization Act of 1974 did not alter the federal purpose. The only sections of the 1954 Act that were repealed were those that had established and organized the Atomic Energy Commission. 42 U.S.C. §§ 2031, 2032 (1970), *repealed by* Pub. L. No. 93-438 § 104, 88 Stat. 1237 (1974). The Federal Nonnuclear Energy Research and Development Act of 1974, 42 U.S.C. §§ 5901-20 (1976 & Supp. IV 1980), underscored Congress' intent that "the policies and provisions of the Atomic Energy Act of 1954 . . . shall continue to apply to research, development and demonstration programs." *Id.* § 5902(b)(2). The Industrial Fuel Use Act's purpose to "foster the greater use of coal and other alternate [non-petroleum] fuels" includes uranium and thus re-emphasizes the importance of nuclear development for the welfare of the country. 42 U.S.C. §§ 8302(a)(6)(A), 8401 (Supp. IV 1980).

Under the Clean Air Act, states may regulate radioactive emissions to the extent that the Environmental Protection Agency lists radioactive materials as pollutants. The NRC, however, oversees implementation of state regulation. 42 U.S.C. § 7422 (Supp. IV 1980). Congress has granted some increased opportunity for state involvement in land use and siting decisions. NRC Appropriation Authorization Act of 1980, Pub. L. No. 96-295, § 108(f) 94 Stat. 780 (1980). These enactments, however, only emphasize the general rule of preemption, and the fact that it is Congress' role, not that of the courts, to enlarge state authority.

five states ban additional nuclear power facilities.[9] Numerous states have laws regulating nuclear waste disposal and nuclear material transportation.[10] Other states have recently enacted laws that single out the nuclear industry.[11] Each of these

---

[9] Statutes prohibit additional nuclear facilities in Connecticut, Maine, Montana and Oregon. Conn. Gen. Stat. Ann. § 22a-136 (West Supp. 1981); Me. Rev. Stat. Ann. tit. 10 §§251-56 (1980); Mont. Code Ann. §§ 75-20-1201 to -05 (1979); Act of July 1, 1979, ch. 510, 1979 Or. Laws; Wisconsin has imposed a ban on new nuclear facilities by administrative action. *Advance Plans for Construction of Facilities, Findings of Fact and Conclusions of Law*, [1964-81 New Developments Transfer Binder] Nuclear Reg. Rep. (CCH) ¶ 20,093 at 16,562 (Wis. Pub. Serv. Comm'n Aug. 17, 1978). *See also* Md. Ann. Code art. 78, § 54A (Supp. 1981). (Prior to facility certification, Public Service Commission must consider *inter alia* availability of means for waste disposal.)

[10] Various statutory schemes are employed to regulate waste disposal and the construction of waste disposal facilities. *See, e.g.*, Conn. Gen. Stat. Ann. § 22a-137 (West Supp. 1981); Ga. Code Ann. § 88-1306.1 (Supp. 1981); Mich. Comp. Laws Ann. § 325.491 (West Supp. 1981-82); Minn. Stat. Ann. §§ 116C.72-.73 (West Supp. 1982); Miss. Code Ann. § 17-17-48 to -51 (Supp. 1981); N.H. Rev. Stat. Ann. §§ 125:77b .77f (Supp. 1979); N.M. Stat. Ann. § 74-4A-11.1 (1981); N.Y. Pub. Auth. Law § 1854-a (McKinney 1981); Vt. Stat. Ann. tit. 10 §§ 6501-06 (Supp. 1981); *see generally* NRC, *Information Report on State Legislation, Radioactive Waste Disposal and Management* (Spec. ed. Dec. 1981).

Numerous states and localities ban or regulate transportation of nuclear materials. *See, e.g.*, Ill. Ann. Stat. ch. 111½ § 230.22 (Smith-Hurd Supp. 1981-82); La. Rev. Stat. Ann. § 30-1111 (West Supp. 1982); Wash. Rev. Code Ann. §§ 70.99.010-.910 (West Supp. 1982); W. Va. Code § 16-27-2 (West 1981); N.Y.C. Health Code § 175.111(1) (1976).

[11] A variety of statutory schemes are directed at reactor siting and construction. Rhode Island and Vermont require legislative approval of new nuclear plants. R.I. Gen. Laws § 42-64-14.1 (1977); Vt. Stat. Ann. tit. 30 § 248(c) (Supp. 1981). In Hawaii a two-thirds majority in each house of the legislature must approve a proposal for a fission reactor. Hawaii Const. art. XI § 8 (1978). The governor must approve proposed facilities in Washington. Wash. Rev. Code Ann. § 80.50.100 (Supp. 1981).

schemes either halts nuclear development outright or may be applied in a way that helps achieve that result

This case presents a needed opportunity to articulate the criteria by which state attempts to regulate nuclear plant construction and operation are to be judged. The federal-state relationship created by the 1954 Act is not only of vital concern to the nuclear industry, it is "a question of great significance to the entire nation." Tribe, *California Declines the Nuclear Gamble: Is Such a State Choice Preempted?* 7 Ecol. L. Q. 679 (1979).[12] The governing principles should be stated now.

B.

The Ninth Circuit's Decision Fails To Weigh Properly The Competing Federal-State Interests And Is At Odds With Prior Decisions Of This Court

The Ninth Circuit erred by accepting at face value California's assertion that its nuclear laws were not enacted for the impermissible purpose of regulating radiation hazards. A single legislative committee report was cited by the court for the proposition that the waste disposal moratorium "is directed towards purposes other than protection against radiation hazards." PG&E App. 40. In a classic negative pregnant, however, the report states that "waste disposal safety is not *directly* addressed by the [nuclear laws]." *Id.* at 40 (emphasis added). It is obvious that even in the legislature's eyes the law was indirectly aimed at regulating radiation hazards associated with nuclear waste. For preemption purposes this is sufficient to invalidate the statute: in fact, however, the state's attempt to regulate radiation hazards has been direct.

In *Perez* v. *Campbell*, 402 U.S. 637, 652 (1971), this Court refused to allow state legislatures to nullify "unwanted federal

[12] The national importance of this case is further demonstrated by the fact that twenty-three states appeared as amici curiae in the Ninth Circuit. PG&E App. 3 n.2.

legislation by simply publishing a legislative committee report articulating some state interest or policy — other than frustration of the federal objective — that would be tangentially furthered by the proposed state law." So too, where federal and state interests conflict, the mere "incantation of a purpose to promote the public health or safety does not insulate a state law from Commerce Clause attack." *Kassel* v. *Consolidated Freightways Corp. of Delaware*, 450 U.S. 662, 670 (1981) (plurality opinion), even though state safety regulations enjoy "a strong presumption of validity." *Bibb* v. *Navajo Freight Lines, Inc.*, 359 U.S. 520, 524 (1959). There must be "a sensitive consideration of the weight and nature of the state regulatory concern in light of the extent of the burden imposed on the course of interstate commerce." *Raymond Motor Transportation, Inc.* v. *Rice*, 434 U.S. 429, 441 (1978); *Kassel*, 450 U.S. at 670-71.

The scrutiny called for by *Perez* when determining whether a state law that nullifies an important federal policy is actually intended to advance a legitimate state purpose should be no less searching. Indeed, where the state law stands as an obstacle to an important federal purpose, in an area pervasively regulated by the federal government with only narrow areas specifically carved out for state regulation, the burden should be on the state to demonstrate with some cogency that a legitimate purpose is in fact significantly advanced by its legislation. These principles apply with great force in the nuclear area, where Congress draws on not only the Commerce Power but other sources of constitutional authority as well. 42 U.S.C. §§ 2011-12 (1976); *Northern States Power Co.* v. *Minnesota*, 447 F.2d 1143, 1147 (8th Cir. 1971), *aff'd mem.*, 405 U.S. 1035 (1972) (common defense and security, interstate and foreign commerce, promotion of general welfare). California having failed even to meet the standard articulated in *Raymond* and *Kassel*, its nuclear waste moratorium should not have been sustained.

State regulation must be consistent with "the respective federal-state roles intended by Congress." *City of Philadelphia* v. *New Jersey*, 437 U.S. 617, 621 n.4 (1978); *see also Perez* v. *Campbell*, 402 U.S. at 651-52. A state may well have a legitimate, permissible reason for enacting legislation that also happens to affect an area preempted by federal law. A state might, for example, seek to regulate a subject generally governed by federal law, but contend that its regulation is for some permitted purpose. Or a state might acknowledge that the questioned regulation reflects mixed legislative motives, some of which might be permissible in Supremacy Clause terms, and others not. Regardless of the label affixed, however, if the Supremacy Clause is to be anything more than an empty promise, the inquiry must not end with the state's contention, as happened below.

Where Congress has expressly carved out a *limited* sphere for state regulation in an area that, from its inception, has been (and by its very nature must be) pervasively regulated by the federal government, a special burden rests on the state. The inquiry should include a careful assessment of whether the state program acts upon the federally-regulated conduct in a way that impedes the achievement of federal objectives, as well as a determination of the factual validity of state claims that some other ostensible purpose is actually being served. A state program that imposes a moratorium on a type of industrial activity the United States not only regulates, but indeed, wishes to encourage, quite clearly fails under the first of these criteria. In this case, the second criterion is also not satisfied.

States may regulate the sale of electricity from nuclear facilities once it is produced. 42 U.S.C. § 2018 (1976); 100 Cong. Rec. 12015 (1954) (remarks of Sen. Hickenlooper). However, the federal government never relinquished its authority to regulate the construction and operation of nuclear plants. 42 U.S.C. § 2021(c) (1) (1976 & Supp. IV 1980). Except as permitted by the Clean Air Act and other specific federal

legislation, the states are prohibited from regulating radiological hazards. *Northern States Power Co.*, 447 F.2d at 1149, *construing* 42 U.S.C. § 2021 (1976 & Supp. IV 1980).

California asserts that its nuclear laws were intended as financial and economic regulation, but the legislative history reveals that an indirect purpose was nuclear waste disposal safety. PG&E App. 40. Contrary to the Ninth Circuit's belief, there is no evidence other than ambiguous statements in the legislative committee's report that the legislature intended the nuclear laws as a form of financial or economic regulation. *Id.* 38-40. The weight of available evidence suggests that this is a sham.

A sensitive weighing of the extent to which the state's asserted purpose is served against the obstacle created for achievement of the federal purpose dictates that the challenged provisions be deemed invalid. California's nuclear laws were intended to "regulate" nuclear energy out of existence. They do nothing to further the state's purported interest in sound financial management of regulated companies. The state's regulatory structure for public utilities existed long before passage of the nuclear laws. That structure permits the state to determine the financial and economic soundness of any proposed plant. California's Public Utility Commission ("PUC") administers a comprehensive program for the review and evaluation of proposed plants, including consideration of economic, technological and environmental aspects of any plant proposal. Cal. Pub. Res. Code § 25504 (West 1977). The Energy Commission may seek the PUC's recommendations concerning the economics of any proposed plant, *id.* § 25506.5, and is required to hold hearings on the electric demand basis for any proposal. *Id.* § 25509. In view of this preexisting regulatory program, California's nuclear laws would have been superfluous if they, too, were intended merely as financial or economic regulatory mea-

sures. It is, however, improper to impute a useless act to any legislature.

The paradox of California's statutes is underscored by the absence of any requirement that waste disposal or fuel rod reprocessing be found to be economical or cost effective. Rather, taken together, the moratorium provisions allow the Energy Commission and the legislature to second-guess the federal government concerning the existence of the relevant technology. The state must not only determine whether a federal plan has been adopted; it must also determine to its own satisfaction whether there exists a *demonstrated* waste disposal and reprocessing technology.[11]

The nuclear laws are also a striking departure from prior California utility regulation in that they single out nuclear energy. As originally enacted, the bills provided that the nuclear laws would not become operative if Proposition 15 were approved by the voters. PLF App. 21. As the Ninth Circuit acknowledged, PG&E App. 38-39, the purpose of Proposition 15 was to limit radiation hazards. Since the nuclear laws were intended to take the place of Proposition 15, one can only assume they were intended to serve the same purpose.

When read together and with other provisions of the California Resources Code, the nuclear laws evince an unmistakable intent to limit radiation hazards. The containment report was intended to help determine whether undergrounding or berm containment of nuclear plants is "necessary, effective or economically feasible to meet the requirements of Sections 25511

---

[11] The Ninth Circuit stated that "[i]t is not clear whether [the waste moratorium provision] would permit California to disapprove a method of waste disposal that the NRC has approved." PG&E App. 40 n.35. The plain words of the statute, however, allow not only the legislature, but the Energy Commission to determine whether the technology needed for waste disposal exists. The statute as written plainly puts the state in competition with federal authority in a preempted field.

and 25520." These sections apparently seek to enhance public health and safety. A provision singling out nuclear facilities because of health and safety reasons can only be directed at a perceived danger unique to nuclear facilities: radiation hazards. Regulation of radiation hazards, however, is preempted by the 1954 Act. *Northern States Power Co.*, 447 F.2d at 1149-54.

The Ninth Circuit avoided coming to grips with California's intent as reflected in the legislation as a whole by eliminating from review all but the waste disposal moratorium and the three site requirement challenges as either unripe, or in the case of the containment report moratorium, moot. PG&E App. 20-27. This "divide and conquer" approach to the task of discerning the state's true objective was mistaken. The challenges to the certification procedure, the land development requirement, the reprocessing moratorium and the spent fuel provisions are ripe for review in any event. Each of these provisions has a present, significant, adverse impact on the utilities. So long as they remain in force, the utilities quite rightly will not expend the time and money needed for initial planning of additional nuclear plants. [14]

---

[14] It takes years of utility and consultant effort as well as millions of dollars to prepare a license application for a nuclear plant. PG&E App. 71-72. Plans must be made long in advance if a plant is to be available when needed. *Id.* PG&E had expended $10 million on its Stanislaus project before the Energy Commission summarily rejected its Notice of Intent. *Id.* 72.

Regulatory cost and uncertainty are serious disincentives to the further development of nuclear power. *See, e.g.*, Cohen, *Innovation and Atomic Energy: Nuclear Power Regulation, 1966-Present*, 42 Law & Contemp. Probs. 67 (1979). As a practical matter, the climate of uncertainty fostered by the challenged provisions of California law will have a profound chilling effect on industry willingness to incur the costs of planning new facilities. Thus, the provisions create a *de facto* moratorium. PG&E Pet. 24-27. A failure to consider the challenges is likely to mean that they will never be heard. *See Duke Power Co.* v. *Carolina Environmental Study Group, Inc.*, 438 U.S. 59, 81-82 (1978).

Finally, "the relationship between state and federal laws as they are interpreted and applied, not merely as they are written" must be considered. *Jones* v. *Rath Packing Co.*, 430 U.S. 519, 526 (1977). Here, as set forth in PG&E's petition, the contemporaneous administrative gloss applied to the Notice of Intent provisions confirms that the legislation was aimed directly at radiological health and safety. PG&E Pet. 22-23. The Court of Appeals ignored this.

In sum, the case calls upon the Court to guide the Ninth Circuit and other lower courts as to the method for evaluating claims that state nuclear legislation does not intrude on the sphere reserved by Congress to federal regulation. The starting point for this analysis should be the elementary notion that the care with which such measures are examined must be directly proportional to the pervasiveness of the federal scheme and the substantiality of the national interest in the particular industrial activity in question. The court below never brought these overarching principles into focus.

CONCLUSION

For the foregoing reasons certiorari should be granted.

Respectfully submitted,

LEONARD M. TROSTEN
Counsel of Record
EUGENE R. FIDELL
DANIEL J. CONWAY
LEBOEUF, LAMB, LEIBY & MACRAE
Suite 1100
1333 New Hampshire Ave., N.W.
Washington, D.C. 20036
(202) 457-7500
Attorneys for Amicus Curiae

LINDA L. HODGE
Staff Counsel
ATOMIC INDUSTRIAL
FORUM, INC.
7101 Wisconsin Avenue
Washington, D.C. 20014

May 1982

Amicus Brief

2

Office - Supreme Court, U.S.
FILED
MAY 20 1982
ALEXANDER L. STEVAS,
CLERK

No. 81-1945

IN THE

Supreme Court of the United States

OCTOBER TERM, 1981

PACIFIC GAS AND ELECTRIC COMPANY and
SOUTHERN CALIFORNIA EDISON COMPANY, *Petitioners*,

v.

STATE ENERGY RESOURCES CONSERVATION AND
DEVELOPMENT COMMISSION, *et al.*, *Respondents*.

Petition For Writ Of Certiorari
To The United States Court Of Appeals
For The Ninth Circuit

BRIEF *AMICUS CURIAE* OF EDISON ELECTRIC INSTITUTE IN SUPPORT OF PETITIONERS

JOSEPH B. KNOTTS, JR.
DONALD K. DANKNER
DEBEVOISE & LIBERMAN
1200 Seventeenth Street, N.W.
Washington, D.C. 20036
(202) 857-9800

Of Counsel:

ROBERT L. BAUM
EDISON ELECTRIC INSTITUTE
1111 Nineteenth Street, N.W.
Washington, D.C. 20036

PRESS OF BYRON S. ADAMS PRINTING, INC., WASHINGTON, D.C.

TABLE OF CONTENTS

	Page
TABLE OF AUTHORITIES	ii
INTEREST OF AMICUS CURIAE	1
SUMMARY OF ARGUMENT	4
ARGUMENT	5
A. The Decision Of The Court Of Appeals Requires Review By This Court Because It Frustrates National Objectives Explicit In The Atomic Energy Act	5
B. The Practical Effect Of The Court Of Appeals Decision Is Contrary To The National Interest	13
CONCLUSION	16

TABLE OF AUTHORITIES

CASES: Page

Arizona v. *California*, 283 U.S. 423 (1931) 6

Duke Power Co. v. *Carolina Environmental Study Group, Inc.*, 438 U.S. 59 (1978) 6

Hines v. *Davidowitz*, 312 U.S. 52 (1941) 5

Johnson v. *Maryland*, 254 U.S. 51 (1920) 6

Jones v. *Rath Packing Co.*, 430 U.S. 519 (1977) 6

Leslie Miller, Inc. v. *Arkansas*, 352 U.S. 187 (1956) 6

M'Culloch v. *Maryland*, 17 U.S. (4 Wheat.) 316 (1819) .. 6

Perez v. *Campbell*, 402 U.S. 637 (1971) 4, 12

Public Utilities Commission v. *United States*, 355 U.S. 534 (1958) 6

United States v. *Georgia Public Service Commission*, 371 U.S. 285 (1963) 6

Minnesota v. *NRC*, 602 F.2d 412 (D.C. Cir. 1979) 10

Natural Resources Defense Council, Inc. v. *NRC*, 582 F.2d 166 (2d Cir. 1978) 10

Northern States Power Co. v. *Minnesota*, 447 F.2d 1143 (8th Cir. 1971), *aff'd mem.* 405 U.S. 1035 (1972) 2, 4, 6, 9, 12

Pacific Legal Foundation v. *State Energy Resources Conservation & Development Commission*, 659 F.2d 903 (9th Cir. 1981) 8, 11

Pacific Legal Foundation v. *State Energy Resources Commission*, 472 F. Supp. 191 (S.D. Cal. 1979) 11

STATUTES:

Atomic Energy Act of 1954, as amended, 42 U.S.C. §§ 2011, 2012, 2013, 2018, 2021 (1976 & Supp. IV 1980) 2, 5, 6, 8, 9, 10

Energy Reorganization Act of 1974 § 202, 42 U.S.C. § 5842 10

Private Ownership Act of 1964, Pub. L. No. 88-489 § 20, 78 Stat. 602 (1964) 7,8

The Warren-Alquist Act, California Public Resources Code § 25500 *et seq.* 2, 3, 10, 11

Conn. Gen. Stat. Ann. § 22a-136 (West Supp. 1981) 13

Me. Rev. Stat. Ann. tit. 10 §§ 252-253 (1980) 13

Table of Authorities Continued

Page

Mont. Code Ann. §§ 75-20-1201 to 75-20-1205 (1979) ... 13

Act of July 1, 1979, ch. 510, 1979 Ore. Laws 629 13

Vt. Stat. Ann. tit. 30 § 248(c) (Supp. 1981) 13

MISCELLANEOUS:

H.R. Rep. No. 1702, 88th Cong., 2d Sess. (1964) 7, 8

S. Rep. No. 870, 86th Cong., 1st Sess. (1959) 9

G. Allison, et al., "Governance of Nuclear Power," John F. Kennedy School of Government, Harvard University, September 1981 ..... 13, 14, 15

Advanced Plans for Construction of Facilities, Findings of Fact and Conclusions of Law [1964-1981, New Developments Transfer Binder] NUCLEAR REG. REP. (CCH) ¶ 20,093 . 13

Mass. H. Res. 5021, adopted May 20, 1981, finalized May 28, 1981 13

IN THE

Supreme Court of the United States

OCTOBER TERM, 1981

No. 81-1945

PACIFIC GAS AND ELECTRIC COMPANY and
SOUTHERN CALIFORNIA EDISON COMPANY, *Petitioners*,

v.

STATE ENERGY RESOURCES CONSERVATION AND
DEVELOPMENT COMMISSION, *et al.*, *Respondents*.

Petition For Writ Of Certiorari
To The United States Court Of Appeals
For The Ninth Circuit

BRIEF *AMICUS CURIAE* OF EDISON ELECTRIC INSTITUTE IN SUPPORT OF PETITIONERS

Edison Electric Institute ("EEI") submits this brief *amicus curiae* supporting the petition for writ of certiorari filed by Pacific Gas and Electric Company and Southern California Edison Company. The consents of each of the parties to this case, and to the companion *Pacific Legal Foundation* case (No. 81-1944), have been obtained and duly filed with the Clerk in accordance with Rule 36.

INTEREST OF *AMICUS CURIAE*

EEI is the national association of investor-owned utility companies in the United States. Its members serve 99.1% of all customers of the investor-owned segment of the industry and

77.1% of the nation's electricity users. EEI's members are adversely affected by the decision of the Court of Appeals reversing the District Court.

The District Court below declared the California nuclear laws[1] invalid under the Supremacy Clause of the United States Constitution because they are preempted by and impermissibly conflict with the federal Atomic Energy Act of 1954, as amended, 42 U.S.C. § 2011, *et seq*. The District Court found that the California nuclear laws prevent the development of any new nuclear plants in that state, even though such plants would qualify for licensing by the Nuclear Regulatory Commission (NRC). It also found that the nuclear laws established a regulatory scheme to govern the construction and operation of nuclear plants which overlapped and conflicted with the federal scheme under the Atomic Energy Act and the regulations promulgated pursuant thereto by the NRC. Consistent with *Northern States Power Co.* v. *Minnesota*, 447 F.2d 1143 (8th Cir. 1971) *aff'd mem.* 405 U.S. 1035 (1972), the District Court held that some of the California laws were invalid in whole and others invalid to the extent that they invaded the *exclusive* power of the federal government to regulate the construction and operation of nuclear power plants.

On appeal, the United States Court of Appeals for the Ninth Circuit reversed, undercutting this Court's affirmance in *Northern States Power, supra*. First, the court found that only the waste disposal moratorium provision (California Public Resources Code, § 25524.2) and the three site review requirements (California Public Resources Code, §§ 25503, 25504

---

[1] The Warren-Alquist Act, California Public Resources Code § 25,500, *et seq*., a copy of which is in Appendix 8 to the petition for writ of certiorari of Pacific Gas & Electric Company (PG&E) and Southern California Edison Company (SCE) at 193-218.

and 25516) were ripe for review.[2] The court then held that the waste disposal and site review requirements were not pre-empted because it found that Congress intended under the Atomic Energy Act to preempt state regulation of radiological hazards only. The court accepted, at face value, selected statements from the legislative history of the California nuclear laws that these requirements were enacted for economic reasons rather than to protect against radiation hazards. By its merits and ripeness rulings, the court left the door open to state regulation of existing nuclear plants as well as future ones.

This case has enormous implications for the members of EEI. Presently, EEI members own and operate 67 of the nation's 79 nuclear power plants licensed to operate. Its members expect to operate another 64 plants which are under construction or on order. EEI has an interest in uniform regulation of nuclear power plants. The reasoning of the Court of Appeals invites Balkanized state regulation of present and future nuclear plants, which frustrates national energy policy objectives.

EEI's members have the obligation as public utilities to meet the future power needs for most of our nation's electric users. Over the next 20 years, demand for electricity is expected to grow at approximately 3.5% per year.[3] This means that electric utilities will have to double their installed generating capacity.[4]

---

[2] The sections held not ripe were §§ 25500, 25502, 25504, 25511, 25512, 25514, 25516, 25517, 25519, 25520, 25523, 25532 regarding the certification system, § 25528 regarding acquisition of development rights, § 25524.1 regarding fuel reprocessing and § 25524.3 regarding placement of nuclear reactors. As demonstrated in the petition of PG&E and SCE at 18-27, the certification provisions deal directly with nuclear safety matters and have been so applied.

[3] This figure is midway through the range of growth rates estimated by EEI.

[4] This is in addition to replacement of existing capacity because of obsolescence or other reasons.

Because hydroelectric resources available for development have been largely exhausted, and because oil and natural gas are very expensive and oil is especially vulnerable to interruption of foreign supplies, coal and nuclear are the most realistic fuels for the nation's electric utilities. In enacting the Atomic Energy Act, Congress has decided that nuclear power should be developed as an option. The Court of Appeals below held that California can eliminate that option there. If the other states follow the lead of California (5 have already taken comparable action), the nuclear option will be completely foreclosed for our nation and to the detriment of EEI's members who have a responsibility to plan and operate an efficient and reliable system of generation.

SUMMARY OF ARGUMENT

This Court has not spoken in a full opinion on the important question of federal preemption in the field of nuclear power. It is important that the Court grant *certiorari* and render a full opinion on this case because the Ninth Circuit's decision purports to allow California and other states (1) to prevent the construction of new nuclear plants even though such plants would qualify for licensing by NRC and (2) to regulate nuclear power safety in the guise of economic (or environmental) regulation. If the decision stands, the national energy policy, explicit in the Atomic Energy Act, will be frustrated and federal efforts to promote and maintain the nuclear option will have been in vain. Correct application of the teachings of *Northern States Power*, *supra*, and *Perez* v. *Campbell*, 402 U.S. 637 (1971) would have led the Court of Appeals to sustain the result reached by the District Court.

ARGUMENT

A. The Decision Of The Court Of Appeals Requires Review By This Court Because It Frustrates National Objectives Explicit In The Atomic Energy Act.

Under the Supremacy Clause of the United States Constitution, a state statute is void if it "stands as an obstacle to the accomplishment and execution of the full purposes and objectives of Congress." *Hines* v. *Davidowitz*, 312 U.S. 52, 67 (1941).

The Atomic Energy Act of 1954 begins with congressional findings and declarations of policy and purposes. Section 1(b) declares that "Atomic energy is capable of application for peaceful as well as military purposes" and thus it is "the policy of the United States that . . . the development, use, and control of atomic energy shall be directed so as to promote world peace, improve the general welfare, increase the standard of living, and strengthen free competition in private enterprise." 42 U.S.C. § 2011(b). Section 2(a) contains the Congressional finding that "[t]he development, utilization, and control of atomic energy for military and for all other purposes are vital to the common defense and security." 42 U.S.C. § 2012(a). Section 3(d) manifests the intent of Congress to provide for "a program to encourage widespread participation in the development and utilization of atomic energy for peaceful purposes. . . ." 42 U.S.C. § 2013(d).

At a minimum, these provisions establish that Congress intended to promote the development of nuclear power consistent with public health and safety. The court in *Northern States* reached a similar conclusion in interpreting these statutory provisions:

> "Congressional objectives expressed in the 1954 Act evince a legislative design to foster and encourage the development, use and control of atomic energy so as to

> make the maximum contribution to the general welfare and to increase the standard of living. 42 U.S.C. §§ 2011, 2012."

Northern States Power, *supra*, 447 F.2d at 1153.

In the classical case of asserted preemption of state regulation by federal law, this Court "start[s] with the assumption that the historic police powers of the states were not to be superseded by the Federal Act unless that was the clear and manifest purpose of Congress." *Jones* v. *Rath Packing Co.*, 430 U.S. 519, 525 (1977) (quoting *Rice* v. *Santa Fe Elevator Corp.*, 331 U.S. 218, 230 (1947)). We respectfully submit that the case of nuclear power is *not* the classical case because it was born as a federal government monopoly. There was and could be no state regulation of that federal activity. *See United States* v. *Georgia Public Service Commission*, 371 U.S. 285 (1963); *Public Utilities Commission* v. *United States*, 355 U.S. 534 (1958); *Arizona* v. *California*, 283 U.S. 423 (1931).[5]

Industrial participation under license was only gradually phased in. *Duke Power Co.* v. *Carolina Environmental Study Group, Inc.*, 438 U.S. 59, 63 (1978). State regulation of the licensed industry was permitted only over narrowly defined areas, as discussed *infra*. What we have in this case is less a question of classic preemption — how much state police power has been surrendered — than a question of statutory construction: how much has Congress left to the states?

At the outset of the nuclear era, under the Atomic Energy Act of 1946, activities in the field of atomic energy could not be regulated by the states because such activities were conducted only by the federal government or its contractors. Under the 1954 Act, industry was permitted to own and operate some

---

[5] *See also Leslie Miller, Inc.* v. *Arkansas*, 352 U.S. 187 (1956); *Johnson* v. *Maryland*, 254 U.S. 51 (1920); *M'Culloch* v. *Maryland*, 17 U.S. (4 Wheat.) 316 (1819).

nuclear facilities, such as reactors, under licensing and regulation by the former Atomic Energy Commission. Industry also was permitted to own some materials, such as radioisotopes, again under federal licensing and regulation. But even under the 1954 Act, industry was not permitted to own the special nuclear material (enriched uranium and produced plutonium) which comprises light water reactor fuel and is the *source* of the hazard which calls for regulation of such materials and of reactors and other facilities in which they are employed.

One would suppose that no credible argument could have been made for state regulation of the industrial use of this hazardous special nuclear material owned by the federal government in the period immediately following 1954. It was against this background of federal ownership of special nuclear material that the Congress added the so-called "Agreement State" provisions to the Act in 1957. These amendments permitted qualifying states to be delegated regulatory authority over certain activities, *excluding* reactors and significant quantities of special nuclear material such as nuclear fuel.

It was not until the Private Ownership Act of 1964[6] that industry was authorized to own special nuclear material. Heretofore, the special nuclear material in nuclear fuel was leased from the AEC.[7] There can be no stronger case for Congressional intent to preempt the field than an intention that its federal authority should be tantamount to government ownership. Section 20 of the Private Ownership Act provides:

> "Nothing in this Act shall be deemed to diminish existing authority of the United States, or of the Atomic Energy Commission under the Atomic Energy Act of 1954, as

---

[6] Pub. L. No. 88-489, 78 Stat. 602 (1964) (codified in scattered sections of 42 U.S.C.).

[7] See H.R. Rep. No. 1702, 88th Cong. 2d. Sess. 5-8 (1964).

> amended, to regulate source, byproduct and special nuclear material and production and utilization facilities . . . in order to assure the common defense and security and to protect the health and safety of the public, *or to reduce the responsibility of the Atomic Energy Commission to achieve such objectives*." (emphasis added)[8]

The "existing authority" referred to included, of course, the authority which flowed from federal ownership.[9]

We noted at the outset that the premise in the classic preemption case — to what extent has the police power of the state been displaced — is inapplicable in the case of nuclear power. Again, that is because nuclear power began as an exclusively federal enterprise as we have briefly traced above. We submit that a key question asked, but incorrectly answered by the Court of Appeals is "to what extent has Congress allowed the states a role?" 659 F.2d at 919-28. There are two principal provisions of the Atomic Energy Act of 1954 from which the ambit of state jurisdiction can be seen: Section 271 (42 U.S.C. § 2018) and Section 274 (42 U.S.C. § 2021).

Section 271 provides, in pertinent part, that nothing in the Atomic Energy Act "shall be construed to affect the authority or regulations of any federal, state or local agency with respect to the generation, sale or transmission of electric power produced through nuclear facilities licensed by the Commission." That section certainly cannot be read as a license to state and local authorities to discriminate against nuclear power (*e.g.*, apply requirements not also applied, *mutatis mutandis*, to other forms

---

[8] Pub. L. 88-489 *supra*, § 20. The "promotional" and operational duties of the Atomic Energy Commission were transferred to the former Energy Research and Development Administration by the Energy Reorganization Act of 1974, and in turn to the Department of Energy by the Department of Energy Organization Act of 1977. *See* 42 U.S.C. § 5801, *et seq.*; 42 U.S.C. § 7107, et seq.

[9] H.R. Rep. 1702, n. 5, *supra*, at 5-8, 19-20, 32.

of generation) much less as an invitation to use purported economic regulation as a ruse to regulate matters committed exclusively to the federal government or to frustrate federal objectives.

Section 274(b) allows qualified states to enter into an agreement with the NRC by which the state can assume some of the regulatory responsibilities of the Commission over types or quantities of materials having relatively little safety or strategic significance. [10] But Section 274(c) explicitly provides that the federal government shall retain exclusive authority — which the NRC cannot delegate to states — over the construction and operation of nuclear reactors. [11] Congress reiterated the theme of Section 271 when it included Subsection 274(k):

> "[n]othing *in this section* shall be construed to affect the authority of any state or local agency to regulate activities for purposes other than protection against radiation hazards." 42 U.S.C. § 2021(k) (emphasis added).

The Court of Appeals read Sections 271 and 274(k) as a license for the states to substitute their judgment for that of the federal government. First, it permitted California to place a moratorium on the development of new nuclear power plants

---

[10] 42 U.S.C. § 2021(b).

[11] 42 U.S.C. § 2021(c). Section 274(c) provides:

> "c. No agreement entered into pursuant to subsection b. shall provide for discontinuance of any authority and the Commission shall retain authority and responsibility with respect to regulation of —
>
> (1) the construction and operation of any production or utilization facility; . . ."

The Committee report on the 1959 agreement state amendments reveals that the Congress was well aware of, and sought to avoid, the problems of inconsistent or overlapping regulation of nuclear facilities and sought to preclude frustration of industrial development. S.Rep. 870, 86th Cong. 1st Sess., *reprinted in* 1959 U.S. CODE CONG. & AD. NEWS 2872, 2879. *See also Northern States Power, supra*, 447 F.2d at 1151-52..

even though such plants would qualify for licensing by the NRC. Section 25524.2 of the California Public Resources Code provides that no nuclear power plant can be certified by the state commission until it finds that the authorized United States agency has approved a technology for disposal of high level nuclear wastes and that the state Commission has reported its findings to the state legislature which has the power to disaffirm them. On the other hand, Section 274(c) of the Atomic Energy Act provides that the NRC has the authority to regulate the construction and operation of nuclear power plants. The matter of siting and developing a repository for high level waste is committed to the Department of Energy. Energy Reorganization Act § 202, 42 U.S.C. § 5842. The NRC need not, nor has it, held up licensing while it considers whether and when the federal repository will be available. *Minnesota* v. *NRC*, 602 F.2d 412 (D.C. Cir. 1979), *Natural Resources Defense Council, Inc.* v. *NRC*; 582 F.2d 166 (2d Cir. 1978).

Moreover, the Court of Appeals upheld the three-site requirement under the California nuclear laws which is more stringent than the NRC requirement. California Public Resource Code Sections 25503, 25504, and 25516 require a utility to propose three alternative sites when applying to the state commission for certification of a nuclear power plant. The state commission must find that at least two of the sites are acceptable. The NRC, on the other hand, requires an applicant to provide detailed information for *one* site showing that no other clearly preferable sites are available. Thus, the California law places substantial burdens on an applicant which the NRC has not found necessary. The California law also makes compliance with the NRC requirements an impossibility any time the California commission and the NRC cannot agree on an appropriate site.

In its analysis, the Court of Appeals brushes aside the Congressional policy which we quoted at the outset. 42 U.S.C.

§§ 2011, 2012 and 2013. The court said "[i]n these objectives we do not find an intent to promote nuclear power at all costs." 659 F.2d at 926. The court read the Atomic Energy Act as leaving it to "the state's regulatory authority to keep nuclear plants from being built, if the plants are inconsistent with the state's power needs or environmental or other interests." *Id.* Continuing, it said "[e]ncompassed in the state's power . . . is the power to deny land use to a nuclear plant." *Id.* Finally, it said that a state has the "power to deny certification for an unnecessary or uneconomic nuclear plant." *Id.*

If it were clear that the Court of Appeals intended all of these statements to be read as if they included the phrase "on a non-discriminatory basis and not as a device to regulate safety under the guise of economic or environmental regulation," these statements would be unexceptional as generalities. But here, where the California nuclear laws clearly seek to regulate safety matters, as amply explained in the utilities' petition for certiorari at 18-20, these statements of the court, if allowed to stand, are an open invitation to California and other states to regulate nuclear power safety as long as they are careful to label what they are doing as economic or environmental regulation.

The flaw in the analysis of the Court of Appeals is plain: it permits a state to nullify federal licensing authority under section 274(c) by cloaking its actions in ostensibly traditional state legislative purposes, that is, purposes other than the real one: regulation of radiological hazards. In enacting §§ 271 and 274(k), Congress plainly did not intend to provide the states with a method of undermining the NRC's exclusive regulatory authority under § 274(c). The proper interpretation — adopted by the District Court below, by the District Court in the companion case, *Pacific Legal Foundation v. State Energy Resources Commission*, 472 F.Supp. 191 (S.D. Cal. 1979), and the Eighth Circuit in *Northern States* — is that Congress intended that the Courts would interpret §§ 271 and 274(k) so as

not to nullify what Congress provided in § 274(c). As the Eight Circuit concluded in *Northern States:*

> "We are of the firm opinion that the mere enactment of elaborate and detailed legislation authorizing turnover agreements to effect a cession to the states of regulatory authority over some activities associated with radiation hazards, and specifically prohibiting the relinquishment of authority over others, in itself evinces an inescapable implication that the federal government possessed exclusive authority absent the agreements authorized by the 1959 amendment. Guss v. Utah Labor Relations Board, 353 U.S.[1,] at 10."

The Court of Appeals failed to apply the preemption principle that a state may not indirectly frustrate the operation of a federal law by stating that it has a purpose other than frustration in mind. In *Perez* v. *Campbell*, 402 U.S. 637 (1971), this Court discussed regulation by a state under the cloak of a non-preempted purpose to frustrate a federal program, and limited two prior decisions which had taken a narrow view of federal supremacy:

> "We can no longer adhere to the aberrational doctrine [of *Kesler* v. *Department of Public Safety*, 369 U.S. 153 (1962) and *Reitz* v. *Mealy*, 314 U.S. 33 (1941)] that state law may frustrate the operation of federal law as long as the state legislature in passing its law had some purpose in mind other than one of frustration. . . . [s]uch a doctrine would enable state legislatures to nullify nearly all unwanted federal legislation by simply publishing a legislative committee report articulating some state interest or policy — other than frustration of the federal objective — that would be tangentially furthered by the proposed state law. . . . [t]he controlling principle [is] that any state legislation which frustrates the full effectiveness of federal law is rendered invalid by the Supremacy Clause."

402 U.S. at 651-52.

Since the California nuclear laws frustrate basic objectives of federal law to permit the construction and operation of those

facilities which meet federal requirements, the California nuclear laws must yield as declared by the District Court below.

B. The Practical Effect Of The Court Of Appeals Decision Is Contrary To The National Interest

The decision of the Court of Appeals below clearly frustrates the policy of Congress to encourage and control the development and use of nuclear power since, as noted above, California has been permitted to place a moratorium on nuclear power. The implications of this decision reach far beyond the borders of California. In the appeal below, twenty-three states filed *amicus curiae* briefs supporting California's efforts to eliminate the nuclear option in that state. To date, five states, in addition to California, have effected nuclear moratoria by statute or administrative action.[12] The possibility that more states will follow the lead of California is not remote in the least.

The impact of foreclosing the nuclear option on EEI's members and the nation would be devastating. The nation's electric utilities, despite a recent decline in demand, still have to install a considerable amount of new generating capacity. Before the oil embargo of 1973 the demand for electricity grew at about 7% a year.[13] Since then the growth in demand has declined to about half that amount. But even at 3.5% electric utilities would

---

[12] Conn. Gen. Stat. Ann. § 22a-136 (West Supp. 1981); Me. Rev. Stat. Ann. tit. 10 §§ 252-253 (1980); Mont. Code Ann. §§ 75-20-1201 to 75-20-1205 (1979); Act of July 1, 1979, ch. 510, 1979 Ore. Laws 629; *see* Advanced Plans for Construction of Facilities, Findings of Fact and Conclusions of Law [1964-1981, New Developments Transfer Binder] NUCLEAR REG. REP. (CCH) ¶ [illegible] at 16,562 (Wisconsin Public Service Commission). *See also* Mass. H. Res. 5021, adopted May 20, 1981, finalized May 28, 1981; Vt. Stat. Ann. tit. 30 § 248(c) (Supp. 1981).

[13] G. Allison, et al. "Governance of Nuclear Power," John F. Kennedy School of Government, Harvard University, September 1981 at 5.

have to double their installed generating capacity every 20 years.

The options available to EEI's members for meeting their needs for new generating capacity are limited. Unconventional sources such as solar, windmills and geothermal will add some capacity, but the bulk of the new generation will have to come from conventional sources.[14] These include hydro, fossil fuels (oil, natural gas and coal) and nuclear.

Of the conventional sources, coal and nuclear are the only viable options. Our nation's hydroelectric potential has been almost fully exploited. The price of oil has increased about 15 fold since 1973 and its supply is insecure. Over 50% of the oil consumed in the United States is imported. This supply is vulnerable to disruption for political, economic or military reasons or because of terrorist activities. Our oil dependence goes to the core of our economic and national security:

> "It is estimated that if Saudi Arabia alone were suddenly to stop exporting oil, and if the cutoff were maintained for one year, the cost to the U.S. economy would exceed $250 billion, and our inflation rate would climb by more than twenty percentage points. Many of our allies would suffer even more, with West Germany and Japan facing economic collapse. The fate of the Western economies is in the hands of a small number of oil exporting nations whose vital interests and objectives often differ from our own and whose stability is uncertain."[15]

Natural gas is not a tenable option because, like oil, it is high priced and a large quantity is imported. Thus, the electric utilities are left with coal and uranium as economical and secure domestic sources for fuel.

---

[14] *Id.*

[15] *Id.* at 6 (Footnote omitted).

Coal alone, however, cannot be counted upon (nor should it) to meet our needs. As the Harvard Report referred to in the margin explains:

> "[B]oth coal and nuclear power have important adverse effects upon public health and safety and upon the environment. Uncertainties abound in the estimates of the severity of these problems. But the most authoritative recent scientific estimates find the threat to public health, safety and the environment from coal to exceed that of nuclear power:
>
> ". . . even when the possibility of reactor accidents is included, the adverse health effects of nuclear power are less than or within the range of health effects from coal."
>
> "Some [energy-related] activities involve environmental effects that are of such potential magnitude and are so difficult to control as a technical matter that they may ultimately constrain the use of some energy sources; the aforementioned possibility of an adverse climatic effect of carbon dioxide from fossil fuel burning is the principal example in this category, to which other analysts might add in radioactive waste disposal." (Footnotes omitted).[16]

In enacting the Atomic Energy Act of 1954, Congress decided that it was in the interest of our national security and a healthy economy to develop and maintain the nuclear power option. That decision is even more compelling today. We urge this Court to review the decision of the Court of Appeals below because it upholds state laws which frustrate these important national interests.

---

[16] *Id.* at 6.

CONCLUSION

For the foregoing reasons, certiorari should be granted.

Respectfully submitted.

JOSEPH B. KNOTTS, JR.
DONALD K. DANKNER
DEBEVOISE & LIBERMAN
1200 Seventeenth Street, N.W.
Washington, D.C. 20036
(202) 857-9800

Of Counsel:

ROBERT L. BAUM
EDISON ELECTRIC INSTITUTE
1111 Nineteenth Street, N.W.
Washington, D.C. 20036

May 20, 1982

Amicus Brief

3

REPRODUCED BY THE CLERK'S OFFICE

Office - Supreme Court, U.S.
FILED
MAY 21 1982
ALEXANDER L. STEVAS,
CLERK

NO. 81-1944
NO. 81-1945

IN THE

Supreme Court of the United States

OCTOBER TERM, 1981

PACIFIC GAS & ELECTRIC COMPANY, ET AL.,
PETITIONERS
V.
CALIFORNIA STATE ENERGY RESOURCES CONSERVATION & DEVELOPMENT COMMISSION,
RESPONDENTS
PACIFIC LEGAL FOUNDATION, ET AL.,
V.
CALIFORNIA STATE ENERGY RESOURCES CONSERVATION & DEVELOPMENT COMMISSION,
RESPONDENTS

ON APPLICATION FOR WRIT OF CERTIORARI TO THE UNITED STATES COURT OF APPEALS FOR THE NINTH CIRCUIT

BRIEF OF AMICUS CURIAE, THE LEGAL FOUNDATION OF AMERICA, URGING GRANT OF WRIT OF CERTIORARI

DAVID CRUMP
LAW SCHOOL
UNIVERSITY OF HOUSTON
HOUSTON, TEXAS 77004
(713) 749-3878
ATTORNEY OF RECORD

J. GREGORY COPELAND
BAKER & BOTTS
ONE SHELL PLAZA
HOUSTON, TEXAS 77002

OF COUNSEL:
WILKES ROBINSON
127 W. 10TH ST.
KANSAS CITY, MO. 64105
H.E. BOWER
5 GREENWAY PLAZA
HOUSTON, TEXAS

TABLE OF CONTENTS

TABLE OF AUTHORITIES	ii
BRIEF OF AMICUS CURIAE	1
INTEREST OF AMICUS CURIAE	1
STATEMENT OF THE CASE	2
REASONS FOR GRANTING THE WRIT	4
CONCLUSION	11

TABLE OF AUTHORITIES

CASES

General Elec. Co. v. Tyrone, Nos. 80-C-6835 & 81-C-461 (D. Ill. Oct. 12, 1981) 3

Natural Resources Defense Council v. United States Nuclear Regulatory Comm., No. 74-1586 (D.C. Cir. April 12, 1982) 3

Pennsylvania v. Nelson, 350 U.S. 497 (1956) 11

Perez v. Campbell, 402 U.S. 637 (1971) 9

Southern Louisiana Area Rate Cases, 428 F.2d 414 (5th Cir. 1970) 2

Vermont Yankee Nuclear Power Corp. v. Natural Resources Defense Council, 435 U.S. 519 (1978) 3

STATUTES AND LEGISLATIVE MATERIALS

Atomic Energy Act 10

California Nuclear Laws 2

10 C.F.R. pt. 100 6

Clean Air Act 10

Natural Gas Policy Act 10

Powerplant & Industrial Fuel Use Act 10

Surface Mining & Reclamation Act of 1977 10

SECONDARY AUTHORITIES

American Chamber of Commerce Research Ass'n, Fourth Quarter Inter-City Cost of Living Indicators (1981) 2

California Assembly Committee on Natural Resources, Land Use & Energy, Reassessment of Nuclear Energy in California: A Policy Analysis of Proposition 15 and Its Alternatives (1976) 4

Murphy & LaPierre, Nuclear Moratorium Legislation in the States and the Supremacy Clause: A Case of Express Preemption, 76 COLUM. L. REV. 393 (1976) 6

ELLIOT'S DEBATES ON THE CONSTITUTION 5

THE FEDERALIST No.44 5

M. LAIRD, ENERGY—A CRISIS IN PUBLIC POLICY (1977) 10

R. POSNER, ECONOMIC ANALYSIS OF LAW (2d ed. 1977) 9

P. SAMUELSON, ECONOMICS (6th ed. 1964) 11-12

NO. 81-1944
NO. 81-1945
IN THE
SUPREME COURT OF THE UNITED STATES
OCTOBER TERM, 1981

PACIFIC GAS & ELECTRIC COMPANY, ET AL.,
PETITIONERS
V.
CALIFORNIA STATE ENERGY RESOURCES CONSERVATION & DEVELOPMENT COMMISSION,
RESPONDENTS
PACIFIC LEGAL FOUNDATION, ET AL.,
V.
CALIFORNIA STATE ENERGY RESOURCES CONSERVATION & DEVELOPMENT COMMISSION,
RESPONDENTS

ON APPLICATION FOR WRIT OF CERTIORARI TO THE UNITED STATES COURT OF APPEALS FOR THE NINTH CIRCUIT

BRIEF OF AMICUS CURIAE, THE LEGAL FOUNDATION OF AMERICA, URGING GRANT OF WRIT OF CERTIORARI

INTEREST OF AMICUS CURIAE

The Legal Foundation of America ("LFA") is a nonprofit corporation supporting the operations of a public interest law firm.[1] Its goals include preservation of the market system and establishment of a better balance between the federal government and the States. All litigation undertaken by LFA is approved by its Board of Trustees, the majority of whom are attorneys.

---

1 All parties have consented to the filing of this brief by LFA. Letters of consent have been lodged with the Court.

LFA has particular expertise in matters relating to energy. During the past twleve months, it has been a participant in litigation to preserve market pricing of oil and gas in cases arising from Kansas, Wyoming, Colorado, Oklahoma and Texas. It has also supported the market system in uranium resources, undertaken efforts to maintain a viable nuclear industry, and participated in litigation concerning cogeneration of electricity. LFA is affiliated with the Gulf Coast & Great Plains Legal Foundation of Kansas City, which has undertaken similar activities with respect to coal.

Most of LFA's members and Trustees reside in the central Southwest. This area has large deposits not only of oil and gas, but of lignite and uranium as well. Currently, a large portion of natural gas produced in the region is transported to California. Such gas is priced far below market, owing to price regulation. Because of desire to maintain assured supply, this region has itself avoided such regulation of gas consumed intrastate.[2] LFA's members therefore pay utility prices above the national average.[3] The actions taken by California that are complained of here will aggravate this situation, which cannot be resolved in the absence of coordinated national effort.

STATEMENT OF THE CASE

This litigation concerns the "California Nuclear Laws," a series of enactments hostile to the development of nuclear generating capacity. Two statutory requirements are of principal concern here.[4] First, the "three-site" provision requires applicants to provide the California Natural Resources Conservation and Development Commission ("Commission") a choice of three different

---

2 Historically, California has undertaken vigorous litigation to ensure the maintenance of such prices below market. See, e.g., Southern Louisiana Area Rate Cases, 428 F.2d 414 (1970). Such efforts have been a factor in inducing shortages. Id.

3 See, e.g., American Chamber of Commerce Research Ass'n, Fourth Quarter Inter-City Cost of Living Indicators (1981).

sites. This requirement applies even if the federal Nuclear Regulatory Commission ("NRC") finds one site in the State unambiguously superior from the standpoint of protection from radiation or environmental hazards. Secondly, the "moratorium" provision prevents new plant construction until and unless the NRC certifies a particular method of waste disposal, which the California Commission must independently determine to meet California's own state waste disposal requirements. NRC has confronted the problem of waste disposal repeatedly and frequently.[5] California's statutes represent an open disagreement with NRC's approach. They reflect an effort to force it to address California's concerns under a different timetable and in a different manner than that chosen by NRC and to choose a method of

---

4 The "three site" requirement is in Cal. Pub. Res. Code secs. 25503, 25504, 25516 (West 1977 & Supp. 1982). The "moratorium" requirement is Id. sec. 25524.2.

These are not the only provisions before the Court, in that the parties have challenged several others as well. Furthermore, the constitutionality of these two provisions is affected by the interrelationship between them and the other parts of a pervasive and onerous State regulatory scheme overlapping and duplicating the federal one. The Court of Appeals erroneously considered each in a vacuum.

5 The question of the adequacy of NRC's approach to waste disposal has been before this Supreme Court. In Vermont Yankee Nuclear Power Corp. v. Natural Resources Defense Council, 435 U.S. 519 (1978), the Court reversed a decision adverse to NRC concerning the issue. On remand, the District of Columbia Circuit again held the rules inadequate, in an opinion rendered less than a month before this writing. Natural Resources Defense Council v. United States Nuclear Regulatory Commission, No. 74-1586 (D.C. Cir. April 27, 1982). A petition for certiorari in this most recent decision is not yet due as of this time. Such litigation represents a direct attack on NRC's approach, while California's Nuclear Laws are an "end run." It would be ironic if NRC's fuel cycle rules were upheld and if California's Nuclear Laws were permitted to stand.

Similarly, several States have attempted to enact legislation preventing nuclear waste disposal. Several such laws have been invalidated as inconsistent with the commerce clause. E.g., General Electric Co. v. Tyrone, Nos. 80-C-6835 & 81-C-461 (D. Ill. Oct. 12, 1981). Such holdings, which require States to allow disposal of out-of-State nuclear wastes, likewise provide an ironic contrast to the California Nuclear Laws.

waste disposal satisfactory to California's State Commission. [6]

REASONS FOR GRANTING THE WRIT

The supremacy clause of the Constitution was one of the principal limits on State power created by the Founders. The Constitutional Convention resulted, in large measure, because the Articles of Confederation permitted individual States to take actions contrary to the national interest. These included actions such as those of California here: laws that operated to the sole benefit of in-State residents, disadvantaged other States, and prevented coordinated solutions to common problems. Alexander Hamilton summarized this reasoning by criticizing the tendency of States to "throw off the burdens of government upon their neighbors."

---

6 The California Assembly explained its reasoning thus: "Waste disposal safety is not directly addressed by the bills, which ask only that a method be chosen and accepted by the federal government." Cal. Assembly Committee on Resources, Land Use & Energy, Reassessment of Nuclear Energy in California: A Policy Analysis of Proposition 15 and Its Alternatives 156 (1976).

The California Assembly did not have authority to act for these reasons. It does not have the power under the Constitution to hold federal energy policy hostage in order to force NRC to "choose" or "accept" any particular approach. The situation with which NRC was faced was described as follows by the Court of Appeals:

> Critics of nuclear power believed that the methods . . . being considered by the federal government would be inadequate . . . . The nuclear industry, on the other hand, believed that the methods . . . would prove adequate . . . .

Slip Op. at 31-32. NRC made a decision regarding its responsibilities in light of this disagreement, concluding that those responsibilities were met by continuing the licensing process. California simply disagrees with that decision, and its Nuclear Laws are an effort to force NRC to adopt a different approach instead. The California Assembly Committee even accused NRC of "poor planning" in this regard. Cal. Assembly Committee, supra, at 18.

Policy decisions must often be made with incomplete information. Indeed, since information is never perfect, decisions based upon incomplete information are a part of the human condition. The present case concerns whether a State can prevent the national government from engaging in such policy making in a real-world context.

II ELLIOT'S DEBATES 366-67. The Federalist, which was the principal document reflecting the consensus under which the Constitution was ratified, contains repeated reference to the need for centrally administered laws to prevent regional "factions" from benefitting themselves at the expense of others. E.g., THE FEDERALIST No. 44.

California's laws, if upheld, would necessitate that each State take its place in a kind of reverse bandwagon against the development of nuclear power, including States that might consider nuclear development nationally advantageous. Laws such as California's do not decrease the demand for electricity, nor do they prevent siting of nuclear facilities in contiguous States or the interstate transmission of the electricity so generated.[7] There are finite risks associated with nuclear power as well as political liabilities for legislators who support it, but significant advantages in the form of cheap and abundant electricity would result from the location of nuclear facilities in adjacent States. Thus a sensible strategy for cynical legislators might be to oppose in-State construction and to support policies that make neighboring States a "dumping ground" for the political disadvantage of nuclear power. Unless contiguous States affirmatively follow the example of California and artificially restrict nuclear development, they will find themselves to be preferred sites for generating facilities to serve markets in States, such as California, that have cast off the burdens upon their neighbors.

In some instances, furthermore, common interests might well be served by the installation of generating capacity in one State to serve markets in other States. A nuclear facility serving Boston, for example, might be proposed in New Hampshire. A site in such a State, which may be uniquely suited in the region to serve Maine, Massachusetts and other States, might be the best

---

7 The United States is covered by electric grids interconnected to prevent blackouts and administered under the provisions of the Federal Power Act. Events in one State can easily cause damage to facilities located in another, including power losses. See Appendix A (diagrammatic representation of United States electrical system interconnects).

location in terms of minimization of radiation and environmental hazards. It might be in a small corner of New Hampshire, where few of the State's population are to be found. NRC's function is to make such siting choices in the national interest. Its responsibility for radiation and environmental considerations is reflected in its published Siting Criteria.[8] If California's laws succeed, however, New Hampshire or any other similarly situated State would have a simple means of frustrating the mission of the NRC. The agency might be forced to approve an alternative site less satisfactory from the standpoint of radiation safety, solely because the alternative happened to be in a State that did not have a law patterned upon California's. But that alternative would itself be short-lived, because if California's laws succeed, each State would not be merely able to frustrate optimal siting in this manner; it would be forced by the bandwagon effect to do so to protect its own interests.

This possibility is not conjectural. More than half the States have already considered laws reciprocal to California's, and several have been enacted.[9] The variation among such laws is itself an

---

8 The Reactor Site Criteria are at 10 C.F.R. pt. 100. In particular, section 100.10 lists the following considerations for siting decisions:

> (a) Characteristics of reactor design . . . .
> (b) Population density and use characteristics of the site and environs . . . .
> (c) Physical characteristics of the site, including seismology, meteorology, geology, and hydrology.

If California followed "land use" criteria for evaluating the three sites required to be submitted to it, it would necessarily consider these identical factors—but it would evaluate them inconsistently with the NRC if, as it claims, it does not intend to consider reactor safety and radiological hazards. Alternatively, if California intends to consider radiological safety in evaluating its "land use" concerns, it enters a preempted area. In either event, the three site requirement engenders inevitable conflicts with NRC's role.

9 Murphy & La Pierre, Nuclear Moratorium Legislation in the States and the Supremacy Clause: A Case of Express Preemption, 76 COLUM. L. REV. 393 (1976). The Court of Appeals cited this work, but it failed to note that the Authors' conclusion is that such legislation is "clearly" preempted.

impediment to nuclear development. Two scholars, writing in the *Columbia Law Review*, undertook a comprehensive study of such State laws and concluded as follows:

> There can be little doubt about the objective of most of the proposed state measures considered here. The supporters to not like nuclear power and seek to stop (indeed roll back) its development. They would do so at the federal level; failing that, they seek to do so at the state level. The opposition is explicity based on fear of the hazards of a nuclear power program—principally the possibility of a catastrophic reactor accident, the problem of long-term hazards of storing "wastes" produced in the fission process, and the possibility of diversion of nuclear materials, especially plutonium, by terrorist groups. All of these matters concern radiological safety and are within the area of control expressly reserved to the federal government by the Atomic Energy Act. They are the subject of extensive—some think excessive—regulation by the Nuclear Regulatory Commission, as successor to the AEC, whose special responsibility has only recently been reaffirmed.
>
> Although the proposed bills are sometimes justified as state regulation, in most cases the claim of regulation is patently a subterfuge for the real objective—prohibition. Although the bills are phrased in terms of "conditions" to be met before further construction, the conditions are, as a practical matter, incapable of fulfillment. It is generally agreed that the probability of a catastrophic accident at a nuclear power plant is very low, but it will never be zero. There is no way that one can now be sure that wastes can be stored without accident throughout eternity, and no one can develop a system which

> will certainly foil a terrorist group bent on making a bomb. Similarly, a pre-assurance of "full compensation" for an unknowable amount of potential damages is impossible.
>
> But even if the bills are viewed as regulatory they would put the states into an area exclusively regulated by the federal government (and in which the states have no expertise). At best they would be redundant; at worst they would be in conflict with federal programs. But whether redundant or conflicting, they are preempted by the Atomic Energy Act. If enacted, the bills almost certainly would be declared invalid. In the meantime, however, they would cause a great deal of confusion and delay and might result in the choice of fossil fuel plants by some companies who did not wish to take even the small risk that the acts would be upheld. The problem of delay and confusion is particularly acute in California and Oregon, where anti-nuclear power initiatives have already been placed on the 1976 ballot.

Murphy & LaPierre, supra note 9, at 455. The Nuclear Laws at issue here are a substitute for the California ballot initiative Murphy and LaPierre refer to as unconstitutional.

Perhaps the most distasteful aspect of the bandwagon effect is the duplicity that the Court of Appeals' opinion encourages. There can be no question that California's legislators responded to constituents whose concern was radiation hazards. But legislation based on that concern would be preempted, and therefore, legislators masked their motivation by pretexts. The California Assembly acted in response to a ballot initiative founded explicitly on radiation concerns. Miraculously, however, the Assembly responded by Nuclear Laws purporting completely to omit any such concerns. Since every safety concern is, in the final analysis, the obverse of an economic concern, the Assembly could readily

express a motivation that was economic—even though the "economics" are based upon radiation.[10] Furthermore, since radiation protection is closely related to siting and land-use concerns,[11] the Assembly could encompass its response to constituents' radiation concerns in those terms. The Court of Appeals was not persuaded in the matter by the insight of the District Court in one of these cases, below, which stated:

> . . . The underlying premise seems to be that any sort of regulation at all is permissible as long as a state legislature is willing and ingenious enough to conjure up a legislative purpose other than radiation control. The evil inherent in giving conclusive effect to declared state legislative purposes to uphold a state statute or regulation which would otherwise be preempted has previously been recognized by the Supreme Court. Perez v. Campbell, 402 U.S. 637, 651-52, 91 S.Ct. 1704, 1712, 29 L.Ed.2d 233 (1971). . . .
>
> More generally, the danger inherent in interpreting section 2021(k) in the manner defendants suggest is that the zone of exclusive federal regulation under section 2021(c) could readily be nullified through careful tailoring of legislative purposes. . . . It is scarcely credible that Congress, in enacting section 2021(k), intended to furnish the States with a means of evading and undermining the NRC's exclusive regulatory authority under section 2021(c).

---

10 See R. POSNER, ECONOMIC ANALYSIS OF LAW ch.10 (2d ed. 1977). A targeted level of safety can be reached by application of a corresponding level of resource commitment, and in this sense every safety concern is really an "economic" one.

11 The land use concerns must inevitably conflict with NRC's siting criteria in any event. See note 8 supra and accompanying text.

472 F. Supp. at 198. These conclusions are even more serious since the bandwagon effect would penalize those States unwilling to engage in this subterfuge. Those States whose politicians debated nuclear concerns honestly and refused to misstate the reasons for their legislation would have nuclear facilities "dumped" among their populations, to serve States whose politicians were willing to dissemble.

Finally, the national concerns underlying the Atomic Energy Act and sucessor legislation[12] are underscored by the interrelationship of energy sources and energy legislation.[13] The Powerplant and Industrial Fuel Use Act ("PIFUA") and the Natural Gas Policy Act ("NGPA") reflect recognition that natural gas cannot continue indefinitely to be used cheaply as a boiler fuel. Indeed, PIFUA disallows construction of electric generating facilities fired by natural gas after 1990. As for coal, as one commentator has colorfully put it, "There are only two problems with coal: You can't dig it and you can't burn it." M. LAIRD, ENERGY—A CRISIS IN PUBLIC POLICY 8 (1977). National policy expressed in such legislation as the Clean Air Act and the Surface Mining and Reclamation Act of 1977 is the reason. These

---

12 The Congressional policy underlying the Atomic Energy Act is quite clearly one of facilitating the development of nuclear energy. That purpose is so clear as to indicate, alone, the error of the holding of the Court of Appeals.

The Court of Appeals avoided this result by recognizing the purpose of energy development but explaining that Congress did not have the intent to promote it "at all costs." Such reasoning amounts to a license for States to frustrate any federal policy on any subject, because no federal policy is carried out "at all cost." Even such basic national concerns as defense, environmental protection, and the guarantee of free speech are not absolute and are not carried out at "all cost."

13 Preemption reasoning may be based upon several different enactments. See, e.g., Pennsylvania v. Nelson, infra (pre-emption found on the basis of three separate enactments with different subject matter and passed at different times). Since energy resources are closely interrelated and federal policy must and does take this interrelationship into account, the case at bar is particularly appropriate for such treatment.

energy sources are substitute goods. Maps of electric interconnects, natural gas flow, and coal transportation routes show the interstate character of their production and use. California's legislation will, quite dramatically, frustrate national policy with reference not only to nuclear generation but natural gas as well, in that it will induce California utilities to exhaust natural gas supply from their principal sources—New Mexico, Texas and Alaska—more rapidly than they would otherwise.

Preemption reasoning is enhanced by the finding not only of a national problem, but one that requires a coordinated national solution. *See, e.g., Pennsylvania v. Nelson*, 350 U.S. 497, 76 S.Ct. 477, 100 L.Ed.2d 640 (1956). In *Nelson*, the Court was faced with state Sedition Acts that supplemented parallel federal legislation on the subject of internal security. The Court concluded that the state legislation was preempted. It looked to three factors: the pervasiveness of the regulatory scheme, the dominance of the national interest, and the danger of state conflict with actual administration objectives. If these concerns are considered here, the conclusion is inescapable that Congress intended NRC to occupy the entire field of radiation-related siting decisions and that California's Nuclear Laws conflict with that intention.

CONCLUSION

The questions in this case are substantial. The bandwagon effect, the danger that it will force States to "throw off the burdens of government upon their neighbors," the encouragement of subterfuge, and the effects upon national policy regarding other energy sources, all transform the case into one affecting not just California, but all of the States in the Union. The large number of state statutes either passed or under consideration that would halt nuclear development even in the face of NRC licensing is a further indication of the importance of the case.

---

14 See Appendices infra.

15 No market is an island unto itself: when wool [prices] rise, ... it raises the [prices] of rival

Respectfully Submitted,

David Crump
Professor of Law
Law School
University of Houston
Houston, Texas 77004
(713) 749-3878
Attorney of Record for Amicus Curiae

J. Gregory Copeland
Baker & Botts
One Shell Plaza
Houston, Texas 77002

CERTIFICATE OF SERVICE

I hereby certify that I have, prior to filing this Brief, served three (3) copies each upon all counsel of record by depositing such copies in a United States Post Office, namely the Central Post Office at Houston, Texas, first class postage prepaid, addressed to: John R. McDonough, Ball, Hunt, Hart, Brown & Baerwitz, 450 N. Roxbury, Suite 500, Beverly Hills, CA 90210; William M. Chamberlain, California Energy Resources Conservation and Development Commission, 1111 Howe Ave., Sacramento, CA 95825; Ralph Cavanaugh, Natural Resources Defense Council, Inc., 25 Kearny St., San Francisco, CA 94108; and Sam Kazman, et al., Pacific Legal Foundation, 1990 M St., N.W., Suite 550, Washington, D.C. 20036; all in accordance with Rule 28.3 of the Rules of this Court.

---

goods like cotton that some demanders will turn to . . . .
P. SAMUELSON, ECONOMICS 68 (6th ed. 1964).

APPENDIX A
UNITED STATES INTERREGIONAL ELECTRIC INTERCONNECTIONS

This schmatic diagram shows electric regional interconnections in the United States system. The grid labelled "WSCC" includes most Western States of the nation, including California, and it is interconnected with "MARCA," the Mid-Continent Reliability Co-ordination Agreement. Interstate transmission of power is readily possible within regions. The diagram is taken from West Texas Utilities Co. v. Texas Elec. Serv. Co., 470 F. Supp. 798, 843 (N.D. Tex. 1979), which explains electrical power interconnection in detail. See also FPC v. Florida Power & Light Co., 404 U.S. 453 (1972).

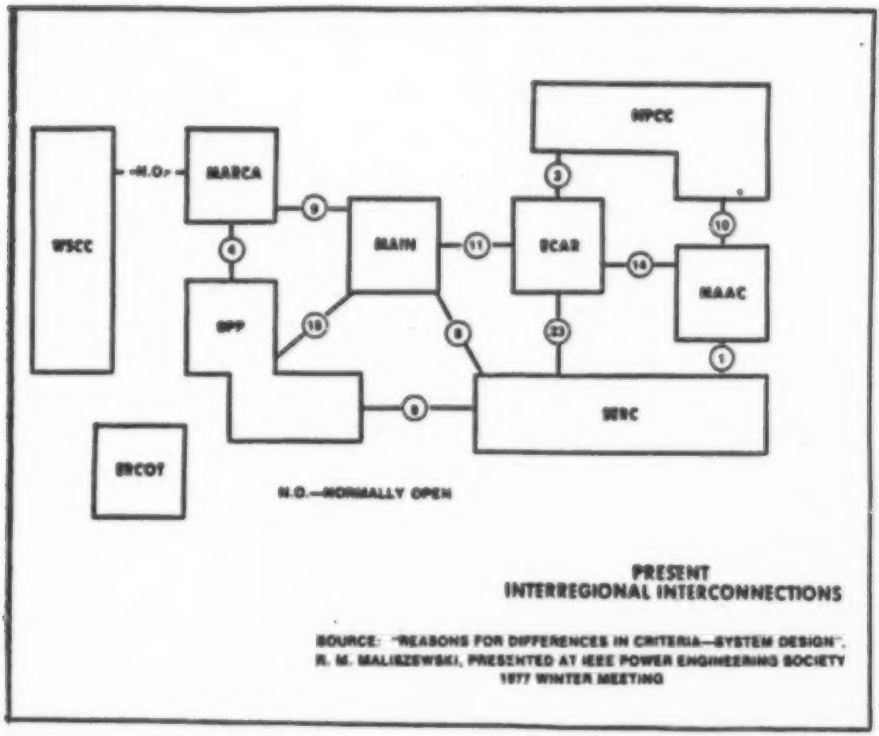

PRESENT
INTERREGIONAL INTERCONNECTIONS

SOURCE: "REASONS FOR DIFFERENCES IN CRITERIA—SYSTEM DESIGN", R. M. MALIEZEWSKI, PRESENTED AT IEEE POWER ENGINEERING SOCIETY 1977 WINTER MEETING

APPENDIX B
NATURAL GAS FLOW DIAGRAM

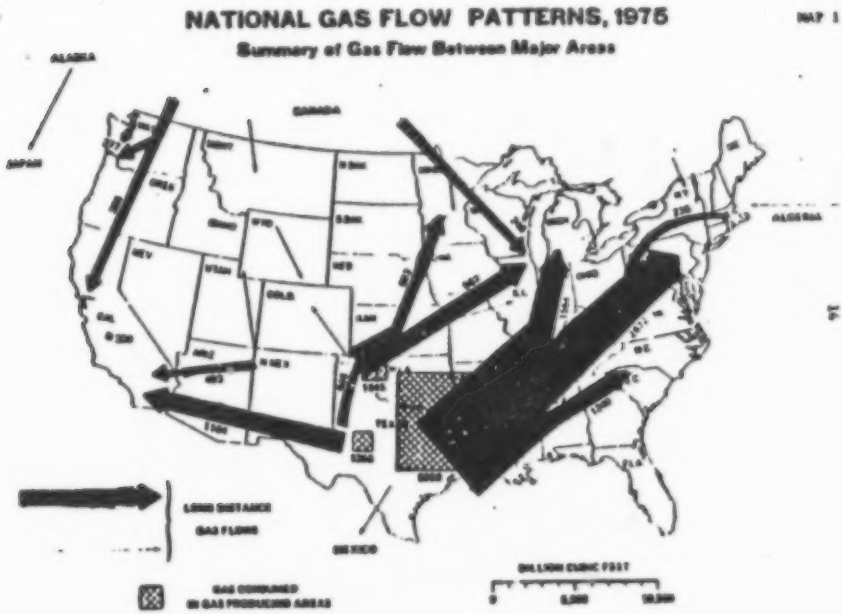

Amicus Brief for the United States

Office-Supreme Court, U.S.
FILED
MAY 22 1982
ALEXANDER L. STEVAS,
CLERK

Nos. 81-1944 and 81-1945

In the Supreme Court of the United States

OCTOBER TERM, 1981

PACIFIC LEGAL FOUNDATION, ET AL., PETITIONERS

v.

STATE ENERGY RESOURCES CONSERVATION & DEVELOPMENT COMMISSION, ET AL.

PACIFIC GAS AND ELECTRIC COMPANY AND SOUTHERN CALIFORNIA EDISON COMPANY, PETITIONERS

v.

STATE ENERGY RESOURCES CONSERVATION AND DEVELOPMENT COMMISSION, ET AL.

ON PETITIONS FOR A WRIT OF CERTIORARI TO THE UNITED STATES COURT OF APPEALS FOR THE NINTH CIRCUIT

BRIEF FOR THE UNITED STATES AS AMICUS CURIAE

REX E. LEE
Solicitor General

J. PAUL MCGRATH
Assistant Attorney General

LOUIS F. CLAIBORNE
Deputy Solicitor General

JOHN H. GARVEY
Assistant to the Solicitor General

LEONARD SCHAITMAN
Attorney

Department of Justice
Washington, D.C. 20530
(202) 633-2217

QUESTION PRESENTED

Whether the provisions in the 1976 amendments to California's Warren-Alquist Act, Cal. Pub. Res. Code §§ 25524.1(b) and 25524.2 (West 1977), which condition the construction of nuclear power plants on findings by the State Energy Resources Conservation and Development Commission that there are adequate storage facilities and means of disposal available for high-level nuclear waste, are preempted by the Atomic Energy Act.

TABLE OF CONTENTS

	Page
Interest of the United States	1
Statement	2
Discussion	7
Conclusion	20

TABLE OF AUTHORITIES

Cases:

Columbia Broadcasting System, Inc. v. *United States*, 316 U.S. 407 12
Duke Power Co. v. *Carolina Environmental Study Group*, 438 U.S. 59 ..... 2, 3, 16
First Iowa Cooperative v. *FPC*, 328 U.S. 152 18
General Electric Co. v. *Fahner*, Nos. 80 C 6835, 81 C 461 (N.D. Ill. Oct. 12, 1981) 9
Hines v. *Davidowitz*, 312 U.S. 52 16
Huron Portland Cement Co. v. *Detroit*, 362 U.S. 440 15
Minnesota v. *NRC*, 602 F.2d 412 8-9
Natural Resources Defense Council, Inc. v. *NRC*, 582 F.2d 166 ..... 8, 9
Northern States Power Co. v. *Minnesota*, 447 F.2d 1143, aff'd mem., 405 U.S. 1035 12
Perez v. *Campbell*, 402 U.S. 637 10
Ray v. *Atlantic Richfield Co.*, 435 U.S. 151 ..... 12, 15
Train v. *Colorado Public Interst Research Group, Inc.*, 426 U.S. 1 15
Washington State Building & Construction v. *Spellman*, 518 F. Supp. 928 10

Constitution, statutes, regulations and rules:

United States Constitution, Article VI, Clause 2 (Supremacy Clause) 10-11
Atomic Energy Act of 1954, 42 U.S.C. 2011 *et seq.*..1, 2, 16

Constitution, statutes, regulations and rules—Continued

	Page
42 U.S.C. 2012(i)	3, 16
42 U.S.C. 2013(d)	2, 3, 16
42 U.S.C. 2014(q)	3
42 U.S.C. 2018	3
42 U.S.C. 2021	2, 3, 12
42 U.S.C. 2021(b)	3, 13
42 U.S.C. 2021(c)	11, 14, 17
42 U.S.C. 2021(c)(1)	2, 3
42 U.S.C. 2021(c)(4)	3
42 U.S.C. 2021(k)	3-4, 7, 13, 16-17
42 U.S.C. 2133	1-2
42 U.S.C. 2201	1-2
Clean Air Act Amendments of 1977, 42 U.S.C. (Supp. III) 7401 *et seq.*:	
42 U.S.C. (Supp. III) 7416	7, 16
42 U.S.C. (Supp. III) 7422	7, 16
Nuclear Regulatory Commission Authorization Act for Fiscal Year 1980, Pub. L. No. 96-295, 94 Stat. 780	17
Powerplant and Industrial Fuel Use Act of 1978, 42 U.S.C. (Supp. III) 8301 *et seq.*	16
42 U.S.C. (Supp. III) 8301(b)(3)	16
42 U.S.C. (Supp. III) 8311	16
42 U.S.C. (Supp. III) 8312(a)	16
Price-Anderson Act, 42 U.S.C. 2210	3, 16
42 U.S.C. 2210(a)	3
Conn. Gen. Stat. Ann. § 22a-136 (West Cum. Supp. 1982)	10
Ill. Rev. Stat. ch. 111½, § 230.22 (Cum. Supp. 1981)	9
Me. Rev. Stat. Ann. tit. 10, §§ 251-256 (West 1980)	10
1982 Me. Acts, ch. 643 (to be codified at Me. Rev. Stat. Ann. tit. 10, § 166)	10
Md. Ann. Code art. 78, § 54A (Supp. 1981)	10
Mass. H. Res. No. 5888 (1979)	10
Or. Rev. Stat. § 469.595 (1981)	10

Constitution, statutes, regulations and rules—Continued — Page

Warren-Alquist State Energy Resources Conservation and Development Act, Cal. Pub. Res. Code § 25000 *et seq.* (West 1977 & Cum. Supp. 1982) 4

Section 25503 (West Cum. Supp. 1982) 6
Section 25504 (West 1977) 6
Section 25516 (West Cum. Supp. 1982) 6
Section 25524.1 (West 1977) 4, 5
Section 25524.1(b) (West 1977) 4, 6-7, 10, 11, 12, 14
Section 25524.2 (West 1977) 4, 5, 7, 10, 14, 16, 18, 19
Section 25524.2(a) (West 1977) 4, 11-12
Section 25524.2(c) (West 1977) 4, 12, 18
Section 25524.2, Historical Note (West 1977) 18
Section 25524.3(b) (West Cum. Supp. 1982) .. 19

Washington Initiative Measure No. 383, 1981 Wash. Laws 1995 9
10 C.F.R. 50.51 17
10 C.F.R. Part 72 ..... 9, 11
10 C.F.R. 72.6 11
Fed. R. Civ. P.:
Rule 54(b) 5
Rule 56(d) 6

Miscellaneous:

Assembly Committee on Resources, Land Use and Energy, *Reassessment of Nuclear Energy in California: A Policy Analysis of Proposition 15 and Its Alternatives* (May 10, 1976) 19
128 Cong. Rec. S4325, S4326 (daily ed. Apr. 29, 1982) 19-20
Department of Energy, *Spent Fuel and Radioactive Waste Inventories and Projections As of December 31, 1980*, DOE NE-0017 (Sept. 1981) 8
44 Fed. Reg. 61372 (1979) 8

Miscellaneous—Continued Page

Federal-State Relationships in the Atomic Energy Field: Hearings Before the Joint Comm. on Atomic Energy, 86th Cong., 1st Sess. (1959) ..13, 14-15, 17

Murphy & LaPierre, *Nuclear "Moratorium" Legislation in the States and the Supremacy Clause: A Case of Express Preemption*, 76 Colum. L. Rev. 392 (1976) 18

61 Op. Cal. Att'y Gen. 159 (1978) 19

S. 1662, 97th Cong., 2d Sess. (1982) 19-20

In the Supreme Court of the United States

OCTOBER TERM, 1981

No. 81-1944

PACIFIC LEGAL FOUNDATION, ET AL., PETITIONERS

v.

STATE ENERGY RESOURCES CONSERVATION & DEVELOPMENT COMMISSION, ET AL.

No. 81-1945

PACIFIC GAS AND ELECTRIC COMPANY AND SOUTHERN CALIFORNIA EDISON COMPANY, PETITIONERS

v.

STATE ENERGY RESOURCES CONSERVATION AND DEVELOPMENT COMMISSION, ET AL.

ON PETITIONS FOR A WRIT OF CERTIORARI TO THE UNITED STATES COURT OF APPEALS FOR THE NINTH CIRCUIT

BRIEF FOR THE UNITED STATES AS AMICUS CURIAE

INTEREST OF THE UNITED STATES

This case presents a substantial question concerning the preemptive effect of the Atomic Energy Act, 42 U.S.C. 2011 *et seq.*, on state laws regulating the construction and operation of nuclear power plants. The Act gives the Nuclear Regulatory Commission (NRC) the authority to regulate such activities (42

U.S.C. 2133, 2201; see *Duke Power Co.* v. *Carolina Environmental Study Group*, 438 U.S. 59, 63 & n.1 (1978)), and also provides a method for federal-state cooperation through agreements between the Commission and the governors of the states (42 U.S.C. 2021). When a state imposes restrictions beyond the scope of such an agreement, however, it may compromise the Commission's statutory responsibility to regulate "the construction and operation of any production or utilization facility * * *." 42 U.S.C. 2021(c)(1). The Atomic Energy Act also expresses a purpose, implemented by the Department of Energy, "to encourage widespread participation in the development and utilization of atomic energy for peaceful purposes * * *." 42 U.S.C. 2013(d). When a state forbids the construction of nuclear power plants, while permitting the construction of other types of power plants, it frustrates this express purpose of the Act.

STATEMENT

1. The Atomic Energy Act of 1954 begins with a congressional declaration of policy: "Atomic energy is capable of application for peaceful * * * purposes. * * * [T]he development, use, and control of atomic energy shall be directed so as to make the maximum contribution to the general welfare * * *." 42 U.S.C. 2011. Its introductory sections repeat several times the intent of Congress to encourage the development of the atomic energy industry. One express purpose of the chapter is to provide for

> a program to encourage widespread participation in the development and utilization of atomic energy for peaceful purposes to the maximum extent consistent with the common defense and security and with the health and safety of the public * * *.

42 U.S.C. 2013(d). In 1957 Congress provided that the United States could limit liability and make funds available for nuclear incidents "[i]n order to protect the public and to encourage the development of the atomic energy industry * * *." 42 U.S.C. 2012(i).[1] To implement that objective Congress passed the Price-Anderson Act, and as recently as 1975 extended its coverage until 1987. 42 U.S.C. 2210. See *Duke Power Co.* v. *Carolina Environmental Study Group*, *supra*, 438 U.S. at 63-67.

Because the Act envisioned the construction of nuclear plants to produce electrical power just as utilities using other energy sources traditionally have, it left intact state authority regarding "the generation, sale, [and] transmission of electric power produced through the use of nuclear facilities," but provided that the states should not have "any authority to regulate, control, or restrict any activities of the Commission." 42 U.S.C. 2018. In 1959 the Act was amended to define more explicitly the respective authority of the Commission and the states. Section 274 of the Act, 42 U.S.C. 2021, added that year, authorized the Commission to turn over to a state responsibility for less hazardous nuclear materials pursuant to an agreement with the Governor. 42 U.S.C. 2021(b). The Commission, however, was to retain sole responsibility for such more hazardous activities as "the construction and operation of any production or utilization facility," and "the disposal of [hazardous] nuclear material * * *." 42 U.S.C. 2021(c)(1), (4). Section 274(k), 42 U.S.C. 2021(k), went on

[1] The definition of "nuclear incident" set out in 42 U.S.C. 2014(q) includes release of radiation from spent reactor fuel. Licensees storing such fuel at the reactor site are covered by the terms of the Price-Anderson Act. 42 U.S.C. 2210(a).

to state that "[n]othing in this section shall be construed to affect the authority of any State or local agency to regulate activities for purposes other than protection against radiation hazards."

2. In 1976 California amended the Warren-Alquist State Energy Resources Conservation and Development Act, Cal. Pub. Res. Code § 25000 *et seq.* (West 1977 & Cum. Supp. 1982), by adopting several provisions (the Nuclear Laws) which impose a moratorium on the construction of new nuclear plants until the State Energy Resources Conservation and Development Commission (Energy Commission) has made certain findings. Section 25524.1(b) (West 1977) provides that the Energy Commission shall determine case-by-case, before allowing construction, the adequacy of nuclear plants' spent fuel storage capacity. Section 25524.2 (West 1977) prohibits the building of any nuclear plant until the NRC "has approved and there exists a demonstrated technology or means for the disposal of high-level nuclear waste." By "disposal" is meant "permanent and terminal disposition." Section 25524.2(a), (c) (West 1977).

3. Robert Thornberry, a nuclear engineer was hired by San Diego Gas & Electric Company (SDG&E) to work on a proposed nuclear plant known as Sundesert. The project was abandoned on May 3, 1978, by resolution of SDG&E's board of directors, and Thornberry lost his job. According to the resolution, the project was abandoned both because the California legislature had not exempted Sundesert from the restrictions of §§ 25524.1 and 25524.2, and because the California Public Utilities Commission had refused to grant SDG&E a rate increase to allow financing of the project (81-1945 Pet. App. 8, 12, 14 & n.16). Thornberry then sued the Energy Commission and

its members in the United States District Court for the Southern District of California, claiming that enforcement of the Nuclear Laws had caused the loss of his job, and arguing that the laws were preempted by the Atomic Energy Act. He was joined as plaintiff by Pacific Legal Foundation and several other organizations. The district court found that only Thornberry had standing (81-1944 Pet. App. 6-7 & n.2). The court concluded that Thornberry's challenge to § 25524.1 was moot, but granted his motion for summary judgment concerning § 25524.2, holding that it was preempted by the Atomic Energy Act (81-1944 Pet. App. 5, 18). The court certified its judgment pursuant to Fed. R. Civ. P. 54(b),[2] and the Energy Commission appealed (81-1945 Pet. App. 8).

Pacific Gas and Electric Company, a utility in northern and central California, decided in the early 1970's to build a nuclear power plant (the Stanislaus project) consisting of two 1200 megawatt units. In mid-1978, after it had spent in excess of $10,000,000 on development, PG&E suspended the Stanislaus project, concluding that the Nuclear Laws and other provisions of the Warren-Alquist Act made it infeasible (81-1945 Pet. App. 72-74).

Southern California Edison (SCE), a utility in southern and central California, proposed to build for operation in the 1990's two 1000 megawatt nuclear

---

[2] The district court did not dismiss the claims of the organizational plaintiffs, including Pacific Legal Foundation, but merely denied their motions for summary judgment (81-1944 Pet. App. 6). The court of appeals dismissed their cross-appeal on the ground that it was not taken from a final judgment. *Pacific Legal Foundation* v. *State Energy Resources Conservation & Development Commission*, No. 79-3424 (9th Cir. Nov. 1, 1979). See 81-1945 Pet. App. 8 n.11.

power units ("Nuclear 1" and "Nuclear 2") as a joint venture with some other utilities. Like PG&E, its management concluded that the combined effect of the Nuclear Laws and other provisions of the Warren-Alquist Act made it impractical to undertake the project (81-1945 Pet. App. 75-76).

PG&E and SCE sued in 1978 in the United States District Court for the Eastern District of California, seeking a declaratory judgment that the Nuclear Laws and 16 other sections of the Warren-Alquist Act were unconstitutional insofar as they conflicted with the Atomic Energy Act. The district court granted the utilities' motion for summary judgment on the question of preemption (see Fed. R. Civ. P. 56(d)), and after a trial limited to the issue of standing, concluded that they had standing to sue (81-1945 Pet. App. 55-64).

4. The Ninth Circuit consolidated the Energy Commission's appeals in both cases and reversed.[3] The court held that summary judgment on the issue of Thornberry's standing was improper, because he had failed to show that SDG&E's Sundesert project would be reinstituted and that he would be rehired if the Nuclear Laws were held invalid. PG&E and SCE were found to have standing (81-1945 Pet. App. 11-19), but the court held their challenge to most of the provisions in the Warren-Alquist Act not ripe (*id.* at 19-23).[4] The court also found Cal. Pub. Res.

---

[3] The *Pacific Legal Foundation* case was remanded (81-1945 Pet. App. 46).

[4] The court did consider, and reject on the merits, a challenge to the requirement that utilities propose three alternative sites for construction of power plants. See Cal. Pub. Res. Code §§ 25503, 25504, 25516 (West 1977 & Cum. Supp. 1982); 81-1945 Pet. App. 41-42.

Code § 25524.1(b) (West 1977) not ripe for review, since it was unable to say whether the Energy Commission would ever find a plant's storage capacity inadequate (81-1945 Pet. App. 25).

The court did address the merits of § 25524.2—the waste disposal provision—and concluded that it was not preempted. The court found in Section 274(k) of the Atomic Energy Act, 42 U.S.C. 2021(k), a congressional declaration that states should be permitted to regulate "for purposes other than protection against radiation hazards." Since California's concern in enacting the moratorium was a financial interest—"that uncertainties in the nuclear fuel cycle make nuclear power an uneconomical and uncertain source of energy"—it was compatible with the intent of Congress (81-1945 Pet. App. 40). Moreover, it found no conflict between the moratorium imposed by § 25524.2 and the purposes of the Atomic Energy Act. Pointing to subsequent legislation which encourages the development of other energy sources, and to statutes like the Clean Air Act Amendments of 1977, 42 U.S.C. (Supp. III) 7416, 7422, which permit state regulation of some aspects of nuclear power production more strict than the corresponding federal restrictions, the court concluded that it did "not find an intent to promote nuclear power at all costs" (81-1945 Pet. App. 42).[5]

DISCUSSION

The court of appeals' decision sanctions state action which poses a serious obstacle to the develop-

[5] Judge Ferguson concurred. He would have held that the plaintiffs had no private right of action to enforce the provisions of the Atomic Energy Act (81-1945 Pet. App. 47-52). A petition for rehearing was denied on January 20, 1982 (*id.* at 53).

ment of nuclear power as a source of electricity. The California nuclear moratorium conflicts with the express terms of the Atomic Energy Act. It also restricts the development of nuclear energy to an impermissible degree, and thereby frustrates the achievement of Congress's objectives in passing the Act. The court's decision should be reversed.

1. The problem of finding a satisfactory long-term solution for the disposal of high-level radioactive waste[6] is currently receiving intense consideration by the federal government. The safety issues related to waste-disposal technology, and the impact which they should have on federal licensing of nuclear power reactors, are the subject of a rulemaking proceeding pending before the Nuclear Regulatory Commission. 44 Fed. Reg. 61372 (1979). The Department of Energy (DOE) is taking steps to develop a disposal technology, not only for spent fuel generated by nuclear power plants, but also for the large quantities of high-level radioactive materials generated by defense and related activities. See *Spent Fuel and Radioactive Waste Inventories and Projections As of December 31, 1980*, DOE NE-0017, 9-11 (Sept. 1981). Although there is no currently licensed means for permanent safe disposal of such materials, the impact on present proposals for construction of nuclear power facilities is tempered by several facts.

First, it takes approximately 12 to 14 years from the time a decision is made to build such a plant until it begins commercial operation (see 81-1945 Pet. App. 71). Second, the NRC has authority to license on-site storage of spent fuel for a period of years after the plant begins operations. See *Min-*

---

[6] See *Natural Resources Defense Council, Inc.* v. *NRC*, 582 F.2d 166, 167 n.2 (2d Cir. 1978).

nesota v. *NRC*, 602 F.2d 412, 419 (D.C. Cir. 1979); *Natural Resources Defense Council, Inc.* v. *NRC*, 582 F.2d 166, 169 (2d Cir. 1978). Third, apart from on-site storage the NRC has the authority to license off-site storage of spent fuel while the technology for permanent disposal is being approved. See 10 C.F.R. Part 72. One such facility, located in Morris, Illinois, has been licensed and has a contract with petitioner Southern California Edison to store spent fuel from SCE's San Onofre, California, plant. See *Illinois* v. *General Electric Co. and Southern California Edison Co.*, appeal pending, Nos. 81-2768, 81-2778 (7th Cir.). The NRC has determined that the likelihood of developing a means for permanent disposal, coupled with the fact that "safe storage methods are * * * available and highly likely to remain so until a permanent disposal system can be demonstrated and licensed," warrant its decision to continue to license new facilities. *Natural Resources Defense Council* v. *NRC*, *supra*, 582 F.2d at 169. Its decision has been upheld by the Second Circuit. *Ibid.* See also *Minnesota* v. *NRC*, *supra*, 602 F.2d at 419.

The pressure to resolve quickly the long-term disposal problem, or to cease altogether the development of nuclear power as a source of electrical energy, has been aggravated by statutory initiatives in numerous states. Many have approached the issue from what is called the "back end" of the fuel cycle, by forbidding the transportation or storage of spent fuel and other high-level wastes within their borders.[7]

---

[7] See, *e.g.*, Ill. Rev. Stat. ch. 111½, § 230.22 (Cum. Supp. 1981); Washington Initiative Measure No. 383, 1981 Wash. Laws 1995. The Illinois Spent Fuel Act was declared unconstitutional in *General Electric Co.* v. *Fahner*, Nos. 80 C 6835, 81 C 461 (N.D. Ill. Oct. 12, 1981), appeal pending, Nos. 81-2768, 81-2778 (7th Cir.). The Washington Initiative was

Cal. Pub. Res. Code §§ 25524.1(b) and 25524.2 (West 1977), by contrast, affect the "middle" of the cycle, forbidding the construction of new nuclear power plants until the issues of high-level waste storage and disposal are resolved. Although California asserts that its action was motivated by economic considerations rather than by concern for the radiological hazards posed by high-level waste (81-1945 Pet. App. 40), it is clear that approving that approach will offer to other states the option of banning the development of nuclear energy by "simply publishing a legislative committee report articulating some state interest or policy—other than frustration of the federal objective * * *." *Perez* v. *Campbell*, 402 U.S. 637, 652 (1971). Since passage of the California nuclear moratorium in 1976 several states have already availed themselves of that option. Conn. Gen. Stat. Ann. § 22a-136 (West Cum. Supp. 1982); Me. Rev. Stat. Ann. tit. 10, §§ 251-256 (West 1980); 1982 Me. Acts, ch. 643 (to be codified at Me. Rev. Stat. Ann. tit. 10, § 166); Md. Ann. Code art. 78, § 54A (Supp. 1981); Or. Rev. Stat. § 469.595 (1981); see also Mass. H. Res. No. 5888 (1979). The possibility that similar action will be taken elsewhere during the extended period required for approval and construction of a nuclear facility adds an element of risk which could make the necessary monetary investment too speculative to undertake.

2. Cal. Pub. Res. Code §§ 25524.1(b) and 25524.2 (West 1977) conflict with the explicit terms of the Atomic Energy Act and the implementing regulations passed by the NRC. They are thus invalid under the Supremacy Clause. U.S. Const., art. VI,

---

declared unconsitutional in *Washington State Building & Construction* v. *Spellman*, 518 F. Supp. 928 (E.D. Wash. 1981), appeal pending, Nos. 81-3454, 81-3461 (9th Cir.).

cl. 2. Section 274(c) of the Atomic Energy Act, 42 U.S.C. 2021(c), provides that regardless of any cooperative agreement entered into between the NRC and the governor of a state,

> * * * the Commission shall retain authority and responsibility with respect to regulation of—
>
> (1) the construction and operation of any production or utilization facility;
>
> * * * * *
>
> (4) the disposal of such * * * nuclear material as the Commission determines * * * should, because of the hazards or potential hazards thereof, not be so disposed of without a license from the Commission.

Implementing that provision, the NRC currently requires that nuclear power plants store spent fuel either on the site of a plant or in a licensed independent spent fuel storage installation meeting specified siting and design criteria. 10 C.F.R. Part 72. Because no permanent disposal facility has yet been licensed, any attempt to dispose of high-level waste by other means is prohibited. 10 C.F.R. 72.6.

California, by contrast, has made two different demands. It requires the Energy Commission to "find on a case-by-case basis that facilities with adequate capacity * * * to store [spent] fuel * * * are in actual operation or will be in operation at the time such nuclear facility requires such * * * storage; provided, however, that such storage of fuel is in an offsite location to the extent necessary to provide continuous onsite full core reserve storage capacity." Cal. Pub. Res. Code § 25524.1(b) (West 1977). In addition it demands, before any nuclear plant can be built, that the Energy Commission find that "there exists a [federally approved] demonstrated technology or means for the disposal of high-

level nuclear waste." *Id.* at § 25524.2(a). By "disposal" is meant "a method for the permanent and terminal disposition of high-level nuclear waste." *Id.* at § 25524.2(c). Moreover, the acceptability of such a method must be demonstrated by "*in situ* large scale tests" (81-1945 Pet. App. 70).

This attempt to improve upon the current federal scheme for storage and disposal of spent fuel is preempted by the federal statutory and regulatory system.[8] "Congress intended uniform national standards for design and construction" of nuclear power plants, and for techniques for disposal of spent fuel, "that would foreclose the imposition of different or more stringent state requirements." *Ray* v. *Atlantic Richfield Co.*, 435 U.S. 151, 163 (1978); *Northern States Power Co.* v. *Minnesota*, 447 F.2d 1143, 1153 (8th Cir. 1971), aff'd mem., 405 U.S. 1035 (1972).[9] The history of the enactment of Section 274, 42 U.S.C. 2021, makes clear that state regulation concerning

---

[8] The court of appeals erred in concluding that § 25524.1(b) was not ripe for review (81-1945 Pet. App. 25). The authority of a state to demand more or different storage facilities than the NRC does is a purely legal question. Moreover, the threat of eventual rejection by the state which overhangs utility construction proposals has a very real present effect on decisions to invest in nuclear power plants. *Columbia Broadcasting System, Inc.* v. *United States*, 316 U.S. 407, 417-423 (1942).

[9] It does not excuse the California regulatory scheme to say that the disposal technology demanded must be acceptable to the federal government. Washington might easily have excluded oil tankers from Puget Sound by declaring that they would be admitted when the federal government approved "standard safety features" like those required by the state. Cf. *Ray* v. *Atlantic Richfield Co.*, *supra*, 435 U.S. at 160. It does not harmonize state and federal law to say that the federal government is free to adopt requirements deemed desirable by the state.

the control of radiation hazards from nuclear materials was to be permitted only pursuant to the agreements authorized by Section 274(b), 42 U.S.C. 2021(b). Though an explicit statement to that effect was deleted from the proposed text of Section 274(k), 42 U.S.C. 2021(k), the change was explained to the Joint Committee on Atomic Energy thus:

> Mr. Ramey: Is it not the Commission position, that without the lead-off language of subsection k, the same result is legally intended and legally effective?
>
> Mr. Lowenstein: Yes.
>
> * * * * *
>
> Chairman Anderson: You have preempted the field, have you not?
>
> Mr. Lowenstein: Yes, sir.

Hearings Before the Joint Comm. on Atomic Energy on Federal-State Relationships in the Atomic Energy Field, 86th Cong., 1st Sess. 492-493 (1959) (*"Hearings"*).

California has attempted to justify its regulation by pointing to the statement in Section 274(k), 42 U.S.C. 2021(k), that "[n]othing in this section shall be construed to affect the authority of any State or local agency to regulate activities for purposes other than protection against radiation hazards." Its concern, it argues, is not that the health of its citizens might be harmed by exposure to high-level waste, but that new reactors might have to be shut down in order to prevent such harm if storage space is not available and techniques for permanent disposal are not licensed. Because that alternative would cause economic harm to consumers of electricity, California asserts that the "purpose" of its moratorium is financial, not health and safety, and that it may

therefore forbid or restrict the construction of new nuclear power plants until it is satisfied with their storage and disposal technology.

That contention, however, is difficult to square with the Act's direction that the NRC "shall retain authority and responsibility with respect to regulation of * * * the construction and operation of [nuclear power plants and] * * * the disposal of [hazardous] nuclear material * * *." 42 U.S.C. 2021(c). Acting pursuant to that provision, the NRC has decided to continue, at least for the present, the licensing of new reactor facilities, based on its judgment that present storage techniques, coupled with progress toward a means of long-term disposal, are adequate to assure that we will not be subjected to radiation hazards from high-level wastes. The reservation of authority to the states to regulate for other purposes was not intended to allow them to review that judgment. Cal. Pub. Res. Code §§ 25524.1(b) and 25524.2 (West 1977) are without question attempts to regulate directly the acceptable methods of managing the radiation hazards of nuclear waste. For putatively economic motives, those provisions require in effect that radiation hazards be dealt with by disposal techniques or by storage guaranteed to the satisfaction of the state Energy Commission, and not by the storage scheme presently authorized by the NRC.

No such concurrent regulatory authority was envisaged by Congress. The reservation on behalf of the states was designed to provide some latitude for states to exercise their traditional police powers when the subject matter was not radiation hazards.

> [W]e did not intend to leave any room for the exercise of concurrent jurisdiction by the States

> to control radiation hazards from those materials. Our sole purpose was to leave room for [state laws] dealing with matters on the fringe of the preempted area in the light of all the provisions and purposes of the Atomic Energy Act * * *.

Hearings, supra, at 500. For example, the states would be permitted to fix rates for power generated at nuclear facilities, or to impose land use requirements, even though both would affect construction of nuclear power plants and disposal of spent fuel. The difference between California's moratorium and such laws is that the latter do not proceed from a judgment that conflicts with a determination already made by the NRC about the likelihood and prevention of radiation hazards.[10] Cf. *Train* v. *Colorado Public Interest Research Group, Inc.*, 426 U.S. 1, 14-18 (1976).

---

[10] A comparison with *Ray* v. *Atlantic Richfield Co., supra*, is instructive. Washington's Tanker Law required oil tankers of from 40,000 to 125,000 DWT to have certain safety features in order to insure vessel safety and environmental harm from oil spillage. The Court held that it was preempted by the federal Ports and Waterways Safety Act of 1972, 33 U.S.C. 1221 *et seq.*, which was enacted for the same purposes. 435 U.S. at 160-168. It is difficult to imagine that the result would have been different if Washington had argued that its purpose was not to prevent the environmental harm from an oil spill, but to protect the commercial interests of waterfront merchants who could suffer a loss of trade in the event of such an accident.

Nothing in *Huron Portland Cement Co.* v. *Detroit*, 362 U.S. 440 (1960), dictates a contrary conclusion. In that case the city did not, in passing its Smoke Abatement Code, act from an assumption which conflicted with the Coast Guard's determination that ships equipped with Scotch marine boilers were safe for navigation. *Id.* at 445. Nor, of course, did the federal government have an interest in promoting the use of such boilers.

3. It is unquestionable that a major purpose of the Atomic Energy Act was to encourage the development and utilization of nuclear energy for peaceful purposes. 42 U.S.C. 2011, 2012(i), 2013(d). A similar objective underlies more recent legislation, such as the Price-Anderson Act, 42 U.S.C. 2210. See *Duke Power Co.* v. *Carolina Environmental Study Group, Inc.*, 438 U.S. 59, 63-67 (1978). The dependence on nuclear power, among other energy sources, is reenforced in the Powerplant and Industrial Fuel Use Act of 1978, 42 U.S.C. (Supp. III) 8301 *et seq.*, which precludes reliance on natural gas and petroleum as primary energy sources in new power plants. 42 U.S.C. (Supp. III) 8311; see also 42 U.S.C. (Supp. III) 8301(b)(3), 8312(a). Cal. Pub. Res. Code § 25524.2 (West 1977) "stands as an obstacle to the accomplishment and execution of the full purposes and objectives of Congress" in enacting such legislation. *Hines* v. *Davidowitz*, 312 U.S. 52, 67 (1941).

The court of appeals was correct in stating that Congress has not shown "an intent to promote nuclear power at all costs" (81-1945 Pet. App. 42). It erred in concluding from that premise that Congress's purpose to encourage private development of nuclear power was defeasible by any state law which claimed to pursue ends other than protection against radiological hazards.[11] Section 274(k), 42 U.S.C.

---

[11] Other federal statutes upon which the court relied actually undercut, rather than support, its conclusion. Although states may enact air emission standards which impose additional costs on utilities employing nuclear power, they may do so because Congress has explicitly granted such authority in the Clean Air Act Amendments of 1977, 42 U.S.C. (Supp. III) 7416, 7422. The same may be said of state authority to enact siting and land use requirements which affect nuclear

2021(k), upon which the court placed great reliance, is not an affirmative grant of power to the states to impede the developmental purposes of the Atomic Energy Act. Its function is "to leave room for [state laws] * * * dealing with matters on the fringe of the preempted area *in the light of all the provisions and purposes of the Atomic Energy Act* * * *." *Hearings, supra*, at 500 (emphasis supplied). Even if the states were to be permitted to review the judgment of the federal agencies charged with developing long-term disposal technologies, they would not be free to jeopardize the primary purposes of the Act by erecting statutory barriers higher than necessary to protect their purported concerns. California has done precisely that.

California has claimed that it is concerned about the possibility that new nuclear power plants may have to be shut down because of a "clog" in the nuclear fuel cycle—the inability to dispose of spent fuel (81-1945 Pet. App. 38). That concern, however, would be completely satisfied by an assurance that storage for high-level waste will be available throughout the useful life of the plant—a period of approximately 40 years. See 10 C.F.R. 50.51. Were the NRC to require on-site storage sufficient to accommodate that amount of waste, the state's concern about a "clog" on the fuel cycle would be at an end. Quite apart from the NRC's oversight of the problem, California has attempted to provide itself that same as-

---

plants, a power explicitly recognized in the NRC Authorization Act for Fiscal Year 1980, Pub. L. No. 96-295, 94 Stat. 780, 783. By contrast, the authority to review a judgment by the NRC concerning the likelihood and consequences of an inability to dispose of hazardous nuclear material is not only unrecognized by Congress, but explicitly withdrawn from the states by 42 U.S.C. 2021(c).

surance in Cal. Pub. Res. Code § 25524.1(b) (West 1977), which requires the state Energy Commission to "find on a case-by-case basis that facilities with adequate capacity * * * to store [spent] fuel * * * are in actual operation or will be in operation at the time such nuclear facility requires such * * * storage * * *." The state has articulated no financial justification for going further and demanding federal approval of "a method for the permanent and terminal disposition of high-level nuclear waste." § 25524.2(c). The responsibility for balancing that concern with the larger purposes of the Atomic Energy Act has been left with the NRC and DOE, which "under our constitutional Government must pass upon these issues on behalf of the people of [California] as well as on behalf of all others." *First Iowa Cooperative* v. *FPC*, 328 U.S. 152, 182 (1946); see Murphy & LaPierre, *Nuclear "Moratorium" Legislation in the States and the Supremacy Clause: A Case of Express Preemption*, 76 Colum. L. Rev. 392, 447-450 (1976).

That Cal. Pub. Res. Code § 25524.2 fulfills no financial imperative for California may be discerned from the circumstances of its enactment. The 1976 Nuclear Laws were passed as an alternative to Proposition 15, an initiative submitted to the voters in June of 1976.[12] Like § 25524.2, Proposition 15 barred construction of new nuclear power plants unless a permanent method of waste disposal was developed, though Proposition 15 gave as the reason for its concern the threat of harm to "the land or the people of * * * California" (81-1944 Pet. App. 23). Other provisions in the Nuclear Laws are less guarded in their

---

[12] By their terms the Nuclear Laws would not have become operative if Proposition 15 had been adopted. Cal. Pub. Res. Code § 25524.2, Historical Note (West 1977).

statement of reasons for the moratorium. Section 25524.3(b) (West Cum. Supp. 1982), for example, required the state Energy Commission to undertake a study of undergrounding and berm containment of nuclear reactors, to determine whether such construction techniques were necessary for "enhancing the public health and safety at a site and related facility * * *." That the state's financial concerns were not sufficiently serious to guarantee passage of the Nuclear Laws is made clear by the Committee Report published shortly before the initiative was defeated. The report stated: "[I]f the Initiative fails and the bills have not passed, the impetus which makes the bills attractive would fade. As a result, the bills would probably never be enacted either." Assembly Committee on Resources, Land Use and Energy, *Reassessment of Nuclear Energy in California: A Policy Analysis of Proposition 15 and Its Alternatives* 157 (May 10, 1976).[13]

Cal. Pub. Res. Code § 25524.2 (West 1977) conflicts with the express terms and the purposes of the Atomic Energy Act. The court of appeals' decision sustaining it, if not reversed, will afford significant encouragement to nascent state efforts to eliminate nuclear power as an alternative energy source.[14]

---

[13] Both the California Attorney General and the California Legislative Counsel have concluded that the 1976 Nuclear Laws are unconstitutional. 61 Op. Cal. Att'y Gen. 159, 173 & n.39 (1978).

[14] On April 29, 1982, the Senate passed a bill, S. 1662, 97th Cong., 2d Sess., entitled the National Nuclear Waste Policy Act of 1982. Section 204 of the bill (*reprinted in* 128 Cong. Rec. S4325, S4326 (daily ed. Apr. 29, 1982)) provides that "[t]he enactment of this Act shall be construed in any Federal, State, and local administrative or judicial proceeding to satisfy any legal or statutory requirement (1) for the exist-

CONCLUSION

The petitions for a writ of certiorari should be granted, limited to the Question Presented in this brief.[15]

Respectfully submitted.

REX E. LEE
Solicitor General

J. PAUL MCGRATH
Assistant Attorney General

LOUIS F. CLAIBORNE
Deputy Solicitor General

JOHN H. GARVEY
Assistant to the Solicitor General

LEONARD SCHAITMAN
Attorney

MAY 1982

---

ence of and the approval of the United States of a demonstrated technology or means for the disposal of spent fuel and high-level nuclear waste and (2) for assurance of the safe disposal of spent fuel and high-level nuclear waste and the scheduled availability of storage and disposal facilities for high-level nuclear waste." The bill has been referred to committee in the House. If it or something similar should be enacted, it would be appropriate for this Court to consider vacating the court of appeals' decision and remanding for reconsideration in light of the legislation. We will of course inform the Court of any such developments which may bear on the proper disposition of this case.

[15] Essentially for the reasons stated by the court of appeals, we believe that the other questions presented by the petitioners are not appropriate for review by this Court.

☆ U. S. GOVERNMENT PRINTING OFFICE: 1982 374402 302

Petitioner's Brief

Office - Supreme Court, U.S.
FILED
SEP 4 1982
ALEXANDER L. STEVAS,
CLERK

No. 81-1945

IN THE

Supreme Court of the United States

October Term, 1982

PACIFIC GAS AND ELECTRIC COMPANY and SOUTHERN CALIFORNIA EDISON COMPANY,

Petitioners,

vs.

STATE ENERGY RESOURCES CONSERVATION AND DEVELOPMENT COMMISSION, *et al.*,

Respondents.

On Writ of Certiorari to the United States Court of Appeals for the Ninth Circuit.

PETITIONERS' BRIEF.

JOHN R. MCDONOUGH,
HOWARD B. SOLOWAY,
Counsel of Record,
BALL, HUNT, HART, BROWN AND BAERWITZ,
450 North Roxbury Drive,
Beverly Hills, Calif. 90210,
(213) 278-1960,
Attorneys for Petitioners.

(Names and Addresses of Attorneys Of Counsel are listed on Inside of Cover.)

Parker & Son, Inc., Law Printers, Los Angeles. Phone 724-6622

Of Counsel:
ROBERT OHLBACH,
RICHARD F. LOCKE,
DAN GRAYSON LUBBOCK,
77 Beale Street,
San Francisco, Calif. 94106,
JOHN R. BURY,
CHARLES R. KOCHER,
JAMES A. BEOLETTO,
2244 Walnut Grove Avenue,
Rosemead, Calif. 91770.

Questions Presented.

Whether petitioners' challenges to the provisions in the 1976 amendments to California's Warren-Alquist Act, Cal. Pub. Res. Code Sections 25524.1(b) and 25524.2 (West 1977), which condition the construction of nuclear plants on findings by the State Energy Resources Conservation and Development Commission that adequate storage facilities and means of disposal are available for high-level nuclear waste, are ripe for judicial review, and whether Sections 25524.1(b) and 25524.2 are pre-empted by the Atomic Energy Act of 1954, 42 U.S.C. Section 2011, *et seq*.

Parties.

Petitioners are two California public utilities, Pacific Gas and Electric Company and Southern California Edison Company. They were the plaintiffs in the action filed in the District Court.[1]

Respondents are (1) defendants below, the California State Energy Resources Conservation and Development Commission and its individual members, Russell Schweickart, Emilio E. Varanini, III, James Walker, Arturo Gándara and Karen Edson,[2] and (2) intervenors below, Natural Resources Defense Council, Inc., Sierra Club, Environmental Defense Fund, and Californians for Nuclear Safeguards.

---

[1]Petitioners' parent companies, subsidiaries and affiliates are listed at ii, n. 1 of the Petition for Writ of Certiorari.

[2]Arturo Gándara and Karen Edson are successors to Commission members C. Suzanne Reed and Ronald D. Doctor, named as defendants in the first amended complaint.

TABLE OF CONTENTS

	Page
Questions Presented	i
Parties	ii
Opinion Below	1
Jurisdiction	2
Constitutional Statutory and Regulatory Provisions	2
Statement of the Case	2
A. Introduction	2
B. The Federal Regulatory Scheme	3
C. California's Conflicting Regulatory Scheme	7
D. Proceedings in the District Court	9
E. The Decision of the Court of Appeals	12
1. Standing and Ripeness	12
2. Preemption	14
Summary of Argument	14
Argument	17
A. The Validity of Cal. Pub. Res. Code Sections 25524.1(b) and 25524.2 Is Ripe for Judicial Determination	17
B. The Atomic Energy Act Preempts State Prohibition or Regulation of Construction and Operation of Nuclear Power Plants to the Extent These Activities Fall Within the Regulatory Jurisdiction of the Nuclear Regulatory Commission Under the Act	20
1. The Challenged California Statutes Are Impliedly Preempted by the Atomic Energy Act as Adopted in 1954	20
2. The Challenged California Statutes Are Expressly Preempted by the 1959 Amendments to the Atomic Energy Act	24

Page

3. Section 274(k) of the Atomic Energy Act, 42 U.S.C. § 2021(k), Does Not Justify the Decision of the Court of Appeals 28
4. Section 271 of the Atomic Energy Act, 42 U.S.C. § 2018, Does Not Justify the Decision of the Court of Appeals 31

C. The Atomic Energy Act and Its Amendments Manifest a Continuing Congressional Purpose to Encourage and Foster the Private Development of Nuclear Power Plants as Electric Power Resources for the United States 33

D. Cal. Pub. Res. Code Sections 25524.1(b) and 25524.2 Are Invalid Because They Are Preempted by and in Conflict With the Atomic Energy Act 38

1. Sections 25524.1(b) and 25524.2 Are Invalid Because They Purport to Regulate Matters Within the Exclusive Regulatory Jurisdiction of the Nuclear Regulatory Commission Pursuant to the Atomic Energy Act 38
2. Sections 25524.1(b) and 25524.2 Are Also Invalid Because the Atomic Energy Act Preempts State Regulation for Protection Against Radiation Hazards 39
3. Sections 25524.1(b) and 25524.2 Conflict With the Federal Regulatory Scheme Under the Atomic Energy Act 41

Page

4. Sections 25524.1(b) and 25524.2 Frustrate the Fundamental Purpose of the Atomic Energy Act, Which Is to Encourage and Foster the Private Use of Nuclear Power for Peaceful Purposes Under Strict and Comprehensive Federal Regulation 42
5. Section 25524.2 Was Enacted to Provide Protection Against Radiation Hazards. Even if It Had Been Enacted for Another Purpose It Would Be Invalid 44
   (a) Section 25524.2 Requires the State Energy Commission to Make an Independent Determination Whether a Satisfactory Method of Disposing of High-Level Nuclear Waste "Has Been Developed . . . and Exists" 44
   (b) The Purpose of Section 25524.2 Is to Provide Protection Against Radiation Hazards 46
   (c) A State Law Which Conflicts With the Atomic Energy Act or Frustrates Its Objectives Is Invalid Whether or Not the Purpose of the State Law Is to Provide Protection Against Radiation Hazards 48

Conclusion 49

TABLE OF AUTHORITIES

Cases Page

Abbott Laboratories v. Gardner, 387 U.S. 136 (1967) 18

Duke Power Co. v. Carolina Environmental Study Group, Inc., 438 U.S. 59 (1978) 4, 20, 21, 34

Graver Tank and Manufacturing Co. v. Linde Air Products Co., 336 U.S. 271 (1949), rehearing granted on other issues, 337 U.S. 910 (1949) 5

Illinois v. General Electric Co., Nos. 81-2768, 81-2778, 51 U.S.L.W. 2055 (July 13, 1982) 37, 40, 41

Illinois v. Nuclear Regulatory Commission, 591 F.2d 12 (7th Cir. 1979) 22

Minnesota v. NRC, 602 F.2d 412 (D.C. Cir. 1979) 5, 39

Natural Resources Defense Council, Inc. v. NRC, 582 F.2d 166 (2d Cir. 1978) 5, 6, 7, 35, 42

Northern States Power Co. v. Minnesota, 447 F.2d 1143 (8th Cir. 1971), aff'd Mem., 405 U.S. 1035 (1972) 22, 23, 27, 40, 42

Pacific Gas and Electric Co. v. State Energy Resources Conservation and Development Commission, 489 F. Supp. 699 (E.D. Cal. 1980) 1, 2

Pacific Legal Foundation v. State Energy Resources Conservation and Development Commission, 472 F. Supp. 191 (1979) 1

Pacific Legal Foundation v. State Energy Resources Conservation and Development Commission, 659 F.2d 903 (9th Cir. 1981) 1, 48

Perez v. Cambell, 402 U.S. 637 (1971) .. 33, 41, 48, 49

Ray v. Atlantic Richfield Co., 435 U.S. 151 (1978) 33, 41

Page

Rice v. Santa Fe Elevator Corp., 331 U.S. 218 (1947) 20, 22

Vermont Yankee Nuclear Power Corporation v. Natural Resources Defense Council, Inc., 435 U.S. 519 (1978) 4, 31

Warth v. Seldin, 422 U.S. 490 (1975) 19

Washington State Building and Construction Trades Council, AFL-CIO v. The Honorable John C. Spellman, Nos. 81-3435, 81-3454, 81-3460 and 81-3461 (August 17, 1982) 40

Westinghouse Electric Corp. v. United States Nuclear Regulatory Commission, 598 F.2d 759 (3rd Cir. 1979) 22

Constitution

United States Constitution, Art. VI, Cl. 2 2

Federal Register

44 Federal Register, p. 61372 (1979) 6

Federal Regulations

Code of Federal Regulations, Title 10, Sec. 2.714 5

Code of Federal Regulations, Title 10, Sec. 2.715(c) . 5

Code of Federal Regulations, Title 10, Sec. 8.4(c) 28

Code of Federal Regulations, Title 10, Sec. 8.4(e)(1) 25

Code of Federal Regulations, Title 10, Sec. 50.2(b) .. 25

Code of Federal Regulations, Title 10 Sec. 50.2(k) ... 25

Code of Federal Regulations, Title 10, Sec. 72 5

Code of Federal Regulations, Title 10, Sec. 72.6 5

Code of Federal Regulations, Title 10, Sec. 72.8 5

Code of Federal Regulations, Title 10, Sec. 150.15(a)(1) 38

Miscellaneous

Page

California Energy Commission Nuclear Fuel Cycle Committee, Statement of Position in the Matter of Proposed Rulemaking on Storage and Disposal of Nuclear Waste (Waste Confidence Rulemaking), July 7, 1980 45

100 Cong. Rec. 12015 (1954) 32

100 Cong. Rec. 12198 (1954) 32

105 Cong. Rec. 8384 (1959) 38

111 Cong. Rec. 24036-37 (1965) 4

Hearings Before the Joint Committee on Atomic Energy on Federal-State Relations in the Atomic Energy Field, 86th Cong., 1st Sess. (1959 Hearings), pp. 126-27, 301, 306, 307-08, 324, 485-86, 488, 492-93, 500, 502 ..... 26, 30, 31

H.R. Rep. No. 294, 95th Cong., 1st Sess., p. 43, reprinted in 1977 U.S. Code Cong. & Ad. News, pp. 1077, 1121 37

H.R. Rep. No. 883, 89th Cong., 1st Sess. at pp. 4, 7-8, 12-13 (1965) 4

H.R. Rep. No. 2181, 83d Cong., 2d Sess. (1954) (1954 Reports) 21

61 Opinions of California Attorney General, pp. 159, 166-67, 173 n. 39, 174-75 (1978) 10, 26, 37, 41

"Reassessment of Nuclear Energy in California: A Policy Analysis of Proposition 15 and Its Alternatives" (1976) R., Excerpt of Record in Court of Appeals Nos. 79-3365, 79-3382, Item No. 6 45

Senate Bill 101 6

Senate Bill 1662, 97th Cong., 2d Sess., 128 Cong. Rec. S4325 (April 29, 1982) 6

Page

Senate and House Reports on the Atomic Energy Act (S.Rep. No. 1699, 83rd Cong., 2d Sess., reprinted in 1954, U.S. Code Cong. & Ad. News, pp. 3456, 3475 (1954 Reports) 21, 22

S. Rep. No. 296, 85th Cong., 1st Sess. at pp. 1, 8, reprinted in 1957, U.S. Code Cong. & Ad. News, pp. 1803, 1809-10 4

S. Rep. No. 454, 94th Cong., 1st Sess. at 8, reprinted in 1975 U.S. Code Cong. & Ad. News, pp. 2251, 2258 ..... 4, 34

S. Rep. No. 870, 86th Cong., 1st Sess., pp. 8, 10 ... 26

Spent Fuel and Radioactive Waste Inventories and Projections as of December 31, 1980, DOE NE-0017, 9-11 (Sept. 1981) 6

Statutes

Atomic Energy Act of 1946, Sec. 274 (60 Stat. 755) (42 U.S.C. §2021) 20, 24, 25, 26, 27, 30

Atomic Energy Act of 1946, Sec. 274(k) (42 U.S.C. §2021(k)) 14, 24, 28, 29, 30, 31, 35

California Administrative Code, Title 20, Sec. 1720, App. A, Sec. (c)(3) (1979) 48

California Health and Safety Code, Sec. 25876 24

California Public Resources Code, Secs. 25000-25986 ..... 2, 7

California Public Resources Code, Secs. 25500-25542 8

California Public Resources Code, Sec. 25511 40

California Public Resources Code, Sec. 25524.1 8

California Public Resources Code, Sec. 25524.1(b) ... . i, 2, 3, 8, 10, 11, 12, 13, 14, 15, 17, 18, ... 19, 24, 38, 39, 40, 41, 42, 43, 44, 49

Page

California Public Resources Code, Sec. 25524.1(c) ... 8

California Public Resources Code, Sec. 25524.2 .... i, 2, 3, 8, 9, 10, 11, 12, 14, 15, 17, 18, 19, ... 31, 38, 39, 40, 41, 42, 43, 44, 45, 46, 48, 49

California Public Resources Code, Sec. 25524.2(a) ... 9

California Public Resources Code, Sec. 25524.2(c) ... 9

California Public Resources Code, Sec. 25524.3 8

National Nuclear Waste Policy Act of 1982, Sec. 101(d) 34

National Nuclear Waste Policy Act of 1982, Sec. 101(i) 6

NRC Authorization Act for Fiscal Year 1980, Pub. L. No. 96-295, 94 Stat. 780 37

United States Code, Title 28, Sec. 1254(1) 2

United States Code, Title 28, Sec. 1331(a) 9

United States Code, Title 28, Sec. 1337 9

United States Code, Title 42, Secs. 2011-2296 .... 2, 3

United States Code, Title 42, Secs. 2011 et seq. ... i, 3

United States Code, Title 42, Secs. 2011-13 33

United States Code, Title 42, Sec. 2012 3

United States Code, Title 42, Sec. 2012(i) 3

United States Code, Title 42, Sec. 2013 3

United States Code, Title 42, Sec. 2013(d) 3, 35

United States Code, Title 42, Sec. 2014(cc) 25

United States Code, Title 42, Sec. 2018 . 13, 31, 32, 35

United States Code, Title 42, Sec. 2021(a)(1) 24

United States Code, Title 42, Sec. 2021(b) 24

United States Code, Title 42, Sec. 2021(c) 24, 25, 26, 27, 28, 29, 37, 38

United States Code, Title 42, Sec. 2021(c)(1) 25, 38

Page

United States Code, Title 42, Sec. 2021(c)(4) 39
United States Code, Title 42, Sec. 2133 39
United States Code, Title 42, Sec. 2201 22
United States Code, Title 42, Sec. 2210 ..... 3, 33, 34
United States Code, Title 42, Sec. 2210(c) 3
United States Code, Title 42, Secs. 5801-5891 .... 6, 35
United States Code, Title 42, Sec. 5814 4
United States Code, Title 42, Sec. 5841 4
United States Code, Title 42, Secs. 5901-20 34
United States Code, Title 42, Sec. 5902(b)(2) 34
United States Code, Title 42, Sec. 7151(a) 4
United States Code, Title 42, Sec. 7416 36
United States Code, Title 42, Sec. 7422 36
United States Code, Title 42, Sec. 7422(c)(3) 36
United States Code, Title 42, Sec. 8301 34
United States Code, Title 42, Sec. 8302(a)(6)(A) 34

Treatise

Tribe, California Declines the Nuclear Gamble: Is Such a State Choice Preempted? 7 Ecology L.Q., 679, 709 (1979) 45

No. 81-1945

IN THE

Supreme Court of the United States

October Term, 1982

PACIFIC GAS AND ELECTRIC COMPANY and SOUTHERN CALIFORNIA EDISON COMPANY,

Petitioners,

vs.

STATE ENERGY RESOURCES CONSERVATION AND DEVELOPMENT COMMISSION, *et al.*,

Respondents.

PETITIONERS' BRIEF.

OPINION BELOW.

The opinion of the Court of Appeals is reported as *Pacific Legal Foundation v. State Energy Resources Conservation and Development Commission*, 659 F.2d 903 (9th Cir. 1981).[3] (A. 1-52.)[4] The opinion of the District Court is reported as *Pacific Gas and Electric Co. v. State Energy*

[3]The Court of Appeals consolidated appeals by respondents from two district court decisions — one from the Eastern District of California (the action brought by petitioners) and the other from the Southern District of California (an action brought by Pacific Legal Foundation and others and reported as *Pacific Legal Foundation v. State Energy Resources Conservation and Development Commission*, 472 F. Supp. 191 (1979)).

[4]The Appendix to Petition for Writ of Certiorari is cited in this Brief as "A." and the Joint Appendix is cited as "J.A." Record documents which are not contained in either appendix are cited as "R." with a description of the document.

Resources Conservation and Development Commission, 489 F. Supp. 699 (E.D. Cal. 1980). (A. 55-64.)

JURISDICTION.

The judgment of the United States Court of Appeals for the Ninth Circuit was entered on October 7, 1981 and is set forth in that court's opinion. (A. 1-52.) Petitioners' petition for rehearing was timely filed on October 21, 1981. The order denying the petition for rehearing was filed January 20, 1982. (A. 53.)

Jurisdiction of this Court is invoked pursuant to 28 U.S.C. § 1254(1).

CONSTITUTIONAL, STATUTORY AND REGULATORY PROVISIONS.

This case involves the following constitutional, statutory and regulatory provisions:

United States Constitution, Article VI, Clause 2 (Supremacy Clause).

The Atomic Energy Act of 1954, as amended, 42 U.S.C. §§ 2011-2296, Title 10 of the Code of Federal Regulations, and the Warren-Alquist State Energy Resources Conservation and Development Act, Cal. Pub. Res. Code §§ 25000-25986, relevant portions of which are set forth in the Appendix to Petition for Writ of Certiorari. (A. 87-219.)[5]

STATEMENT OF THE CASE.

A. Introduction.

This case, as limited by the Court's writ of certiorari, involves the validity of Cal. Pub. Res. Code Sections 25524.1(b) and 25524.2. These statutes prohibit the construction and operation of any new nuclear power plant in California until respondent State Energy Resources Con-

---

[5]The two California statutes challenged here, Cal. Pub. Res. Code Sections 25524.1(b) and 25524.2, are set out *infra* at 8-9, fns. 15, 16 and at A. 208, 210-12.

servation and Development Commission ("the State Energy Commission") has made decisions authorizing the plant to be built. The District Court for the Eastern District of California held that both statutes are ripe for review and that they are invalid because they are preempted by and in conflict with the Atomic Energy Act of 1954 as amended. The Court of Appeals for the Ninth Circuit reversed, holding Section 25524.1(b) not ripe for review and Section 25524.2 ripe for review but not preempted. The Court of Appeals' decision should be reversed and Sections 25524.1(b) and 25524.2 held invalid.

B. The Federal Regulatory Scheme.

By the Atomic Energy Act of 1954, as amended, 42 U.S.C. §§ 2011-2296, Congress authorized the private utilization of nuclear energy to generate electricity. In doing so, Congress enacted "a program to encourage widespread participation in the development and utilization of atomic energy for peaceful purposes to the maximum extent consistent with the common defense and security and with the health and safety of the public." 42 U.S.C. § 2013(d). This federal policy was also reflected in Sections 2011, 2012 and 2013 of the Act.

Congress continued after 1954 to enact legislation for the purpose of encouraging the use of nuclear energy to generate electricity. The Price-Anderson Act, enacted in 1957, limited liability for damages arising out of a nuclear incident and made federal funds available to pay a portion of such damages "[i]n order to protect the public and to encourage the development of the atomic energy industry . . . ." 42 U.S.C. § 2012(i).[6] Congress extended the Price-Anderson Act in 1965 for 10 years and in 1975 until 1987. 42 U.S.C. § 2210(c). The legislative reports and debates con-

---

[6]The substantive provisions of the Price-Anderson Act, codified in 42 U.S.C. § 2210, were accompanied by amendments to 42 U.S.C. § 2012, including the addition of subsection (i).

cerning this legislation reveal that its genesis was Congressional concern that private development of nuclear power plants would be jeopardized unless the Price-Anderson Act was first enacted and later extended.[7]

The Atomic Energy Act gave the Atomic Energy Commission ("AEC") plenary and pervasive jurisdiction over the issuance of licenses to construct and operate nuclear power plants, a jurisdiction that in 1974 was transferred to the Nuclear Regulatory Commission ("NRC").[8] *Duke Power Co. v. Carolina Environmental Study Group, Inc.*, 438 U.S. 59, 63 (1978). The broad and comprehensive regulatory authority of the NRC and the predecessor AEC were aptly described by this Court in *Vermont Yankee Nuclear Power Corporation v. Natural Resources Defense Council, Inc.*, 435 U.S. 519, 525-527 (1978).

Under the Atomic Energy Act and attendant regulations (codified in 10 C.F.R.), a public utility desiring to build and operate a nuclear power plant must apply to the NRC, successively, for a construction permit and an operating license. In determining whether to grant such permit and license, the NRC requires the applicant to furnish detailed information pertaining to, among others, the geology and seismology of the proposed site of the plant, population density in the surrounding area, the design of the proposed plant and its safety systems, the applicant's proposed quality assurance program, and the impact of the plant on the environment. In addition, the NRC monitors both the con-

---

[7]See S. Rep. No. 296, 85th Cong., 1st Sess. at 1, 8, *reprinted in* 1957 U.S. Code Cong. & Ad. News 1803, 1809-10; H.R. Rep. No. 883, 89th Cong., 1st Sess. at 4, 7-8, 12-13 (1965); 111 Cong. Rec. 24036-37 (1965); S. Rep. No. 454, 94th Cong., 1st Sess. at 8, *reprinted in* 1975 U.S. Code Cong. & Ad. News 2251, 2258.

[8]The Energy Reorganization Act of 1974 dismantled the AEC, 42 U.S.C. § 5814, and a part of its functions were transferred to the Energy Research and Development Administration ("ERDA"). *Id.* The AEC's regulatory functions were transferred to the NRC. 42 U.S.C. § 5841. ERDA's functions were later transferred to the Department of Energy. 42 U.S.C. § 7151(a).

struction and the operation of the nuclear power plant to ensure that they conform to the requirements of the Act and its implementing regulations.[9] (District Court Finding 5, A. 67.)[10] To petitioners' knowledge there is no comparable instance of minutely-detailed federal regulation of private endeavor to effectuate federal policy.

As part of its broad authority, the NRC actively regulates the storage and disposal of the spent nuclear fuel generated by a nuclear power plant.[11] The NRC has authority to license on-site storage of spent fuel for a period of years after the nuclear plant begins operation. See *Minnesota v. NRC*, 602 F.2d at 419; *Natural Resources Defense Council, Inc. v. NRC*, 582 F.2d 166, 169 (2d Cir. 1978). It is a NRC requirement that a nuclear power plant store its spent fuel either on the site of the plant or in an off-site licensed spent fuel storage installation meeting specified siting and design criteria. 10 C.F.R. Part 72. Other disposal methods for high-level waste are prohibited. 10 C.F.R. § 72.6. The states are explicitly prohibited from licensing spent fuel storage facilities. 10 C.F.R. § 72.8.

---

[9]NRC regulations give the states a preferred position in NRC proceedings, by allowing them to intervene, 10 C.F.R. § 2.714, and by allowing them to present their views and concerns on any issue being considered, 10 C.F.R. § 2.715(c).

[10]The District Court's factual findings were affirmed by the Court of Appeals. "A court of law, such as this Court is, rather than a court for correction of errors in fact finding, cannot undertake to review concurrent findings of fact by two courts below in the absence of a very obvious and exceptional showing of error." *Graver Tank and Manufacturing Co. v. Linde Air Products Co.*, 336 U.S. 271, 275 (1949), *rehearing granted on other issues*, 337 U.S. 910 (1949).

[11]A nuclear power plant is fueled by the carefully controlled insertion of tubular fuel bundle receptacles, consisting of "fuel rods," which contain pellets of nuclear material. The nuclear material is "burned up" over a period of time, following which the fuel rods are removed and new ones inserted. The used fuel rods, containing "spent" nuclear fuel, are highly radioactive. (J.A. 420-23.) See *Minnesota v. NRC*, 602 F.2d 412, 413 (D.C. Cir. 1979).

The federal government has responsibility for developing a technology or means for the permanent disposal of spent nuclear fuel and other high-level nuclear waste generated by nuclear power plants and other nuclear material utilization facilities.[12] The radiological safety issues related to waste-disposal technology and the impact which they should have on federal licensing of nuclear power reactors are the subject of a rulemaking proceeding pending before the NRC. 44 Fed. Reg. 61372 (1979). The Department of Energy also is engaged in efforts to develop a disposal technology for spent fuel generated by nuclear power plants. See *Spent Fuel and Radioactive Waste Inventories and Projections As of December 31, 1980*, DOE NE-0017, 9-11 (Sept. 1981).

Even though a specific method for permanent disposal of high-level nuclear waste has not yet been put in place, the NRC has determined that construction and operation of nuclear power plants should be federally authorized, stating: "The Commission would not continue to license reactors if it did not have reasonable confidence that the wastes can and will in due course be disposed of safely."[13] This NRC determination was upheld by the Court of Appeals for the Second Circuit in *Natural Resources Defense Council, Inc. v. NRC*, the Court holding that by enactment of the Energy Reorganization Act of 1974, 42 U.S.C. §§ 5801-5891, "Congress expressly recognized and impliedly approved

---

[12]On April 29, 1982, the Senate passed a bill, S. 1662, 97th Cong., 2d Sess., entitled the National Nuclear Waste Policy Act of 1982 (reprinted in 128 Cong. Rec. S4325 (April 29, 1982)). Section 101 of the bill recognizes federal responsibility for interim storage of spent fuel and disposal of high-level radioactive waste from civilian nuclear power plants, and for managing a program to store and dispose of such wastes so that nuclear power can contribute to the energy needs of the United States. The bill is pending in the House.

[13]Quoted in *Natural Resources Defense Council, Inc. v. NRC*, 582 F.2d at 169. Section 101(i) of the National Nuclear Waste Policy Act of 1982, as passed by the Senate, declares that the technology exists for safe disposal of nuclear waste.

NRC's regulatory scheme and practice under which the safety of interim storage of high-level radioactive wastes at commercial nuclear power reactor sites has been determined separately from the safety of Government-owned permanent storage facilities which have not, as yet, been established." 582 F.2d at 174 (footnote omitted).

C. California's Conflicting Regulatory Scheme.

The Warren-Alquist State Energy Resources Conservation and Development Act, as amended, Cal. Pub. Res. Code §§ 25000-25986 ("the Warren-Alquist Act"), adopted in 1974 and effective in 1975, requires an applicant to build in California any electric power generating plant, including a nuclear power plant, first to file with respondent State Energy Commission a notice of intention to file an application for certification ("NOI"), after which filing the Commission conducts a review process for a period of not to exceed 12 months. If the NOI is approved, the applicant must then file an application for certification ("AFC"), after which filing the State Energy Commission conducts a further review process for not to exceed 18 months. In the course of the NOI and AFC proceedings for a proposed nuclear plant, the State Energy Commission is authorized and required to make determinations pertaining to virtually every matter which is the subject of determinations by the NRC in its licensing process. These include but are not limited to the geology and seismology of the proposed site, population density in the surrounding area, the design of the proposed plant and its safety systems, and the impact of the plant on the environment. (District Court Finding 6, A. 67-68.) *Unless certification (approval) is granted by the State Energy Commission, the proposed nuclear plant cannot be constructed, even though it qualifies for licensing by the NRC*. If the nuclear power plant ultimately is certified by the State Energy Commission, the certification must contain specifications for the construction of the plant, and

the Commission is required both to monitor construction to see that it conforms to those requirements and to monitor the operation of the facility after it becomes operational. Cal. Pub. Res. Code §§ 25500-25542. (District Court Finding 6, A. 67-68.) These post-certification activities also duplicate those of the NRC.

The Warren-Alquist Act was amended in 1976 for the purpose of providing additional state regulation of new nuclear power plant construction and operation by, among other things, prohibiting new construction until the State Energy Commission is satisfied with and approves a method of interim storage of spent nuclear fuel and permanent disposal of high-level nuclear waste.[14] Cal. Pub. Res. Code Section 25524.1(b) (interim spent fuel storage) provides that the State Energy Commission shall determine case-by-case, *before authorizing construction*, the adequacy of a proposed nuclear power plant's spent storage capacity. Section 25524.1(c) prohibits the construction and operation in California of a new nuclear power plant unless the State Energy Commission is satisfied with its method of spent nuclear fuel storage.[15]

Cal. Pub. Res. Code Section 25524.2 (high-level waste disposal) prohibits the construction and operation in Cali-

---

[14]The 1976 amendments, sometimes referred to herein as "the 1976 Nuclear Laws," added Sections 25524.1, 25524.2 and 25524.3 to the Warren-Alquist Act.

[15]Section 25524.1(b) provides:

> The commission shall further find on a case-by-case basis that facilities with adequate capacity to reprocess nuclear fuel rods from a certified nuclear facility or to store such fuel if such storage is approved by an authorized agency of the United States are in actual operation or will be in operation at the time such nuclear facility requires such reprocessing or storage; provided, however, that such storage of fuel is in an offsite location to the extent necessary to provide continuous onsite full core reserve storage capacity.

Section 25524.1(c) provides in part: "The commission . . . shall not issue a decision pursuant to Section 25523 granting a certificate until the requirements of this section have been met. . . ."

fornia of any new nuclear power plant until the State Energy Commission has made an independent determination whether a satisfactory technology or means for the disposal of high-level nuclear waste "has been developed . . . and . . . exists."[16] Disposal of "high-level nuclear waste" is defined as "a method for the permanent and terminal disposition of high-level nuclear waste. . . ." Cal. Pub. Res. Code Section 25524.2(a), (c).

D. Proceedings in the District Court.

Petitioners Pacific Gas and Electric Company ("PGandE") and Southern California Edison Company ("Edison") commenced this action in 1978 by filing in the District Court a complaint for declaratory relief. Jurisdiction was invoked pursuant to 28 U.S.C. §§ 1331(a) and 1337, petitioners alleging that numerous provisions of the Warren-Alquist Act, including the two statutes challenged here, are invalid

---

[16]Section 25524.2 provides in relevant part:

> No nuclear fission thermal powerplant . . . shall be permitted land use in the state, or where applicable, be certified by the commission until both conditions (a) and (b) have been met: (a) The commission finds that there has been developed and that the United States through its authorized agency has approved and there exists a demonstrated technology or means for the disposal of high-level nuclear waste (b) The commission has reported its findings and the reasons therefor pursuant to paragraph (a) to the Legislature.

A State Energy Commission finding that a technology or means for the disposal of high-level nuclear waste has been developed, has been approved by the United States, and exists is subject to review by the California Legislature; and certification of nuclear power plants continues to be prohibited until 100 legislative days have elapsed without disaffirmance of the findings by either house of the Legislature or, if the findings have been so disaffirmed but thereafter are re-adhered to by the State Energy Commission, the Legislature fails to void the renewed findings by statute within 100 legislative days after their retransmittal by the State Energy Commission.

under the Supremacy Clause because they are preempted by and in conflict with the Atomic Energy Act.[17]

On April 25, 1980, after trial on the issue of standing and adjudication of all other issues as a matter of law in response to petitioners' motion for summary judgment, the District Court filed its opinion, separate findings of fact and conclusions of law, and judgment in favor of petitioners. (A. 55-86.) The District Court held, among other things, that petitioners have standing to challenge Sections 25524.1(b) and 25524.2, that the issues presented by these two statutes are ripe for adjudication, and that the two challenged provisions of the Warren-Alquist Act are void because they are preempted by and in conflict with the Atomic Energy Act.

The District Court found in the case of petitioner PGandE that the Warren-Alquist Act, including Sections 25524.1(b) and 25524.2, has prevented PGandE from proceeding with a proposed new two-unit nuclear power plant known as the Stanislaus project, which PGandE in the early 1970's determined to construct to commence operation in the late 1980's. PGandE had expended at least $10,000,000 on the Stanislaus project as of August 30, 1977. On that date PGandE filed a NOI for the Stanislaus project with the State Energy Commission. The Stanislaus NOI was summarily rejected on September 29, 1977 by a State Energy Commission letter ("the rejection letter" (A. 221)), later elaborated upon in a "Data Adequacy Report" issued by the Commission (A. 241). Both documents stated that the NOI was required to contain additional information, including a substantial amount of data relating to the radiological

---

[17]The State Energy Commission is the primary defendant in the action. The State of California did not intervene either in the District Court or the Court of Appeals to assert the validity of the challenged provisions of the Warren-Alquist Act. The California Attorney General and the California Legislative Counsel previously had concluded that the 1976 Nuclear Laws are invalid under the Supremacy Clause. 61 Op. Cal. Att'y Gen. 159, 173 n. 39 (1978).

safety of the Stanislaus project (including data on health and safety effects from nuclear fuel storage and disposal (A. 246-248)). Much of the demanded information concerned matters falling within the regulatory jurisdiction of the NRC. (District Court Finding 15, A. 72-73.) The Data Adequacy Report reflects State Energy Commission assertion of jurisdiction and intention to regulate all aspects of nuclear power plant construction and operation, *including regulation of interim storage of spent fuel and permanent disposal of high-level nuclear waste.*[18]

The District Court found that PGandE decided in mid-1978 to suspend the Stanislaus project because the Warren-Alquist Act — including Sections 25524.1(b) and 25524.2 — makes it impossible, as a practical matter, for PGandE to spend and commit the very substantial funds necessary to proceed with the Stanislaus project[19] unless and until the statutes are declared void. (District Court Finding 17, A.

---

[18]The Data Adequacy Report specifically required from PGandE additional information "on the nature and extent of the [radioactive] emissions from other portions of the nuclear fuel cycle" — a reference to emissions caused by the failure to dispose permanently of nuclear waste. (A. 246.) The Report also required PGandE "to cite available information regarding the health and safety effects of the nuclear fuel cycle." (A. 247.) As for spent fuel storage, the Report stated that inadequate information was provided and requested additional data including "estimates of spent fuel storage pool capacity," the "advantages and disadvantages of on-site versus off-site storage," "analysis of the effect of long storage time," and "projected requirements for, and availability of, spent fuel shipping casks over the lifetime of the plant." (A. 247-248.)

[19]It takes from 12 to 14 years from the time a decision is made to build a nuclear power plant until the plant begins commercial operation. Public utilities such as petitioners must make major, multimillion-dollar expenditures and financial commitments for a nuclear power plant project many years in advance of the power plant's commercial operation, in order to be able to go through the federal, and state, licensing process. (District Court Finding 13, A. 71.)

73-74.)[20] The District Court reached similar conclusions concerning petitioner Edison, finding that the Warren-Alquist Act, including Sections 25524.1(b) and 25524.2, prevents Edison from proceeding with planned nuclear power plant construction projects. (District Court Findings 20-22, A. 75-77.)

E. The Decision of the Court of Appeals.

1. Standing and Ripeness.

The Court of Appeals affirmed the District Court's ruling that PGandE and Edison have standing to challenge all of the California statutes invalidated by the District Court, including Sections 25524.1(b) and 25524.2, stating:

> Because the challenged statutes stand as an absolute barrier to construction of the proposed plants, and because that barrier will be removed if the utilities secure the injunctive [*sic*] relief they seek, it is irrelevant that an injunction [*sic*] would not guarantee that the plants will be built. [Citation omitted.] It is sufficient that the utilities intend to proceed if the statutes are invalidated. The utilities therefore have standing to sue.

(A. 18-19.)

The Court of Appeals also affirmed the decision of the District Court that the challenge to Section 25524.2 is ripe

---

[20]This decision was reached for two principal reasons. *First*, the 1976 amendments to the Warren-Alquist Act, including Sections 25524.1(b) and 25524.2, taken in conjunction with the State Energy Commission's January, 1978 interim decision concerning the 1976 Nuclear Laws (J.A. 412) and a concurrent Draft Report of the Commission's Nuclear Fuel Cycle Committee (J.A. 39), create an unacceptable risk that the State Energy Commission would not grant certification to the Stanislaus project on a timely basis or at all. *Second*, the State Energy Commission's expressed intention, in processing the Stanislaus project NOI, to require PGandE to furnish information concerning matters within the regulatory jurisdiction of the NRC creates an equally unacceptable risk of conflicting determinations pertaining to the same issues between the State Energy Commission and the NRC that would preclude or substantially delay governmental approval of the Stanislaus project. (District Court Finding 17, A. 73-74.)

for review.[21] The Court of Appeals nevertheless held that petitioners' challenge to Section 25524.1(b) (and many other provisions of the Warren-Alquist Act) is not ripe for review. The Court acknowledged that Section 25524.1(b) requires the State Energy Commission to determine the adequacy of a nuclear power plant's spent fuel storage capacity and that the State Energy Commission intends to make such determinations on a case-by-case basis, as the statute requires. The Court of Appeals further acknowledged that the Draft Report of the State Energy Commission's Nuclear Fuel Cycle Committee recommends requiring all nuclear power plants to provide a specified amount of storage space. But the Court of Appeals nonetheless concluded that "[b]ecause we cannot know whether the Energy Commission will ever find a nuclear plant's storage capacity to be inadequate, we hold that the challenge to Section 25524.1(b) is not ripe for review." (A. 25.) The Court did not address petitioners' contention that the challenge to Section 25524.1(b) is ripe for review because it presents a purely legal issue — whether a state may demand more or different nuclear

---

[21]The Court said:

> We conclude that the challenge to Section 25524.2 is ripe for adjudication. The issue before us is a purely legal one and our ability to deal with it would not be enhanced if we were to delay review. See *Duke Power Co. v. Carolina Environmental Study Group, Inc.*, 438 U.S. 59, 81-82 (1978). Postponement could, moreover, work substantial hardship on the utilities. On the one hand, they could proceed with their plans in the hopes that, when the time for certification came, either the required findings would be made or the law would be struck down. This would require massive expenditures over a number of years, expenditures that quite possibly could not be recovered unless the plant were eventually certified. Alternatively, the utilities could abandon their plans to use nuclear power, with the result that no challenge to Section 25524.2 would ever be ripe.
>
> We see no need to place the utilities in such a quandary. Since consideration of the underlying legal issues would be no easier in the context of a specific certification proceeding, we hold that the issues are ripe.

(A. 26-27.)

waste storage facilities than the NRC, or make any demands at all.

2. Preemption.

The Court of Appeals held that Section 25524.2, the high-level nuclear waste disposal provision, is not preempted. The Court concluded that Sections 271 and 274(k) of the Atomic Energy Act, 42 U.S.C. §§ 2018 and 2021(k), constitute a Congressional affirmation that states may regulate nuclear power plants "for purposes other than protection against radiation hazards." (A. 37.) The Court held that California did not enact the prohibition found in Section 25524.2 to provide protection against radiation hazards but because "uncertainties in the nuclear fuel cycle make nuclear power an uneconomical and uncertain source of energy." (A. 40.) On the basis of these determinations, the Court of Appeals concluded that the enactment of Section 25524.2 is not precluded by the Atomic Energy Act. (A. 40.) The Court was unable to see any conflict between the prohibition imposed by Section 25524.2 and the Congressional policy, reflected in the Act, of encouraging and fostering the development of atomic energy for peaceful purposes. (A. 42-46.)

SUMMARY OF ARGUMENT.

1. Sections 25524.1(b) and 25524.2 of the Warren-Alquist Act are ripe for judicial review because:

(a) They directly affect petitioners by prohibiting them from building any new nuclear power plant in California until petitioners provide for interim nuclear waste storage facilities in conformity with State Energy Commission requirements and until the State Energy Commission has made an independent determination "that there has been developed . . . and there exists a demonstrated technology or means for the disposal of high-level nuclear waste"; and

(b) They raise purely legal issues: (i) whether California can demand more or different interim spent fuel storage facilities than the federal government requires, or make any demands at all, (ii) whether California can prohibit new construction until the State Energy Commission is satisfied "that there has been developed . . . and there exists a demonstrated technology or means for the disposal of high-level nuclear waste" whereas the NRC does not impose that limitation on construction of nuclear power plants, (iii) whether Congress intends there to coexist many regulatory agencies — one federal agency and up to fifty state agencies — each empowered to decide in minute detail, for its own reasons, whether and how nuclear power plants may be constructed and operated, and (iv) whether Sections 25524.1(b) and 25524.2 impermissibly frustrate the national policy of encouraging and fostering the private development of atomic energy for peaceful purposes.

2. Sections 25524.1(b) and 25524.2 are invalid under the Supremacy Clause because:

(a) They authorize and require the State Energy Commission to regulate the construction and operation of nuclear power plants, a subject preempted by Congress for federal regulation;

(b) They authorize and require the State Energy Commission to regulate the construction and operation of nuclear power plants for protection against radiation hazards, a subject even more clearly preempted by Congress for federal regulation;

(c) They prohibit indefinitely the construction of nuclear power plants in California on grounds which would not preclude their licensing by the NRC and thus conflict with federal regulations and decision mak-

ing and make it impossible for the federal system of regulation to work as a practical matter; and

(d) They frustrate the federal purpose of encouraging and fostering the development of nuclear power for peaceful purposes under strict and comprehensive federal regulation.

ARGUMENT.

A. THE VALIDITY OF CAL. PUB. RES. CODE SECTIONS 25524.1(b) AND 25524.2 IS RIPE FOR JUDICIAL DETERMINATION.

Cal. Pub. Res. Code Sections 25524.1(b) (interim spent fuel storage) and 25524.2 (high-level waste disposal) are presently operative. The State Energy Commission in January, 1978 issued an interim decision (J.A. 412) concerning, among other things, Sections 25524.1(b) and 25524.2. As to Section 25524.1(b), the January, 1978 interim decision stated that the State Energy Commission would carefully review the spent fuel storage capacity of each nuclear power plant that came before it for licensing. (District Court Finding 8, A. 69-70; J.A. 416.) Moreover, a concurrent Draft Report by the State Energy Commission's Nuclear Fuel Cycle Committee (J.A. 39) stated that nuclear power plants and related storage structures should be required to be designed to provide, as needed, capacity adequate to store for *50 years* after shutdown of a nuclear power plant all spent fuel rods resulting from *40 years* of plant operation, as well as storage capacity for all nuclear fuel rods currently loaded in the reactor — an extent of nuclear fuel storage capacity not required by federal law and one that petitioners would not voluntarily use in designing their nuclear power plants. (District Court Finding 10, A. 70-71; J.A. 171-72.) The Draft Report concluded that "on-site storage poses a number of safety problems" and then recommended that each utility "should present a spent fuel disposition plan at the time of certification, ensuring responsibility and care for any fuel left at the site, or a definite mechanism to remove the fuel from the site." (J.A. 171-72.)

As for Section 25524.2, the State Energy Commission's January, 1978 interim decision stated that the Commission could not then make the high-level waste disposal findings required by the statute before certification of nuclear power plants may proceed, in part because of "the absence of

demonstrated waste disposal technology." (J.A. 415-16.) The Nuclear Fuel Cycle Committee's concurrent Draft Report stated that the requirements of Section 25524.2 cannot be met unless and until (a) a waste-disposal technology has been demonstrated by "*in situ* large scale tests," which the Report stated have not been undertaken, and (b) the United States government has licensed the operation of "a commercial high-level waste depository" — an event that the Department of Energy has stated is not targeted to occur sooner than 1988-1990. (District Court Finding 9, A. 70; J.A. 176-82, 296-307.) The Draft Report criticized the federal approach to the waste disposal problem and concluded, based on *independent* analysis, that "a technology for the permanent and terminal disposal of high-level waste has not been developed and demonstrated." (J.A. 180-82.)

In short, Sections 25524.1(b) and 25524.2, both facially and as they have been administered by the State Energy Commission, directly prohibit any new nuclear power plant construction in California until the State Energy Commission's requirements concerning interim spent fuel storage are complied with *and* until the State Energy Commission has made an independent determination that "there has been developed . . . and there exists a demonstrated technology or means for the disposal of high-level nuclear waste."

The Court of Appeals was correct in its holding that petitioners have standing to bring this action and that their challenge to Section 25524.2 is ripe for adjudication. Petitioners have standing because the statutes in issue "stand as an absolute barrier to construction [by petitioners] of the proposed plants." (A. 18.) And petitioners' challenge to Section 25524.2 is ripe because (1) the statute presently affects petitioners, (2) the issue is a purely legal one, and (3) delay in determining the issue would only aggravate petitioners' injuries without any further sharpening of the question presented. See *Abbott Laboratories v. Gardner*, 387 U.S. 136, 149 (1967). Moreover, "the harm asserted

[prohibiting petitioners indefinitely from building new nuclear plants] has matured sufficiently to warrant judicial intervention." *Warth v. Seldin*, 422 U.S. 490, 499 n. 10 (1975).

The Court of Appeals was incorrect when it held that the challenge to Section 25524.1(b) is not ripe for review allegedly "because we cannot know whether the Energy Commission will ever find a nuclear plant's storage capacity to be inadequate." (A. 25.) Petitioners have standing to challenge Section 25524.1(b) because the statute "stand[s] as an absolute barrier to construction [by petitioner] of the proposed plants." (A. 18.) And the challenge is ripe because (1) the statute presently affects petitioners by requiring them to comply with State Energy Commission regulation of spent fuel storage if they want to build new plants, (2) the issue is a purely legal one — whether California can demand more or different storage facilities than the federal government, or make any demands at all — and (3) delay in determining the issue would only aggravate petitioners' injuries without any further sharpening of the question presented. Moreover, "the harm asserted [preventing petitioners from building new plants unless they comply with State Energy Commission requirements which go beyond NRC requirements] has matured sufficiently to warrant judicial intervention."

The ripeness analysis that led the Court of Appeals to decide the validity of Section 25524.2 on the merits requires a decision on the merits of Section 25524.1(b). This case does not concern how the State Energy Commission will regulate spent fuel storage with respect to a particular nuclear power plant in the future *but whether California has the right to regulate this matter at all*. The validity of both Sections 25524.1(b) and 25524.2 should be adjudicated by this Court on the merits.

B. THE ATOMIC ENERGY ACT PREEMPTS STATE PROHIBITION OR REGULATION OF CONSTRUCTION AND OPERATION OF NUCLEAR POWER PLANTS TO THE EXTENT THESE ACTIVITIES FALL WITHIN THE REGULATORY JURISDICTION OF THE NUCLEAR REGULATORY COMMISSION UNDER THE ACT.

1. The Challenged California Statutes Are Impliedly Preempted by the Atomic Energy Act as Adopted in 1954.

In 1946, Congress first regulated the then-fledgling field of production and utilization of nuclear energy, by enacting the Atomic Energy Act of 1946, ch. 274, 60 Stat. 755. The 1946 Act gave the federal government complete control over all nuclear materials and facilities. (A. 29.) This Court has observed that it is clear that Congress then "contemplated the development of nuclear power would be a [federal] Government monopoly." *Duke Power Co. v. Carolina Environmental Study Group, Inc.*, 438 U.S. at 63.

In most cases, preemption analysis begins with the assumption that the *historic* police powers of the states should not be found to have been displaced by federal law unless that was the clear and manifest purpose of Congress. *Rice v. Santa Fe Elevator Corp.*, 331 U.S. 218, 230 (1947). In the case of nuclear power, preemption analysis is different, however, because this subject matter began as a federal government monopoly, where there was and could be no state regulation. Accordingly, the relevant question in this case is whether Congress has clearly manifested a purpose to confer upon the states, in derogation of the federal government monopoly, the powers asserted by California to regulate the construction and operation of nuclear power plants.

The Atomic Energy Act of 1954 represented a limited change in federal nuclear policy that has been described by this Court as follows:

> [In 1954] Congress concluded that the national interest would be best served if the Government encouraged the private sector to become involved in the development of atomic energy for peaceful purposes under a program of federal regulation and licensing. See H.R. Rep. No. 2181, 83d Cong., 2d Sess., 1-11 (1954). The Atomic Energy Act of 1954 . . . implemented this policy decision, providing for licensing of private construction, ownership and operation of commercial nuclear power reactors for energy production under strict supervision by the Atomic Energy Commission.

Duke Power Co. v. Carolina Environmental Study Group, Inc., 438 U.S. at 63 (footnote omitted). While the 1954 legislation ended the federal monopoly of the development of nuclear power, it did not give the states a regulatory role with respect to that activity. The "strict supervision" contemplated was *exclusive federal supervision*.

The primary purpose of the Atomic Energy Act of 1954 was to encourage and foster private utilization of nuclear energy for peaceful purposes, most immediately through the construction and operation of nuclear power plants. This purpose was clearly stated in and recognized by the congressional committee reports on the Act.[22] The terms of the Atomic Energy Act as adopted in 1954 also reveal that its goal of encouraging nuclear power plant development was coupled with an intent that the federal government actively supervise this process, so as to accomplish significant *national* objectives. The pervasive federal regulatory requirements concerning the construction and operation of nuclear power plants assured that such activities would be conducted

---

[22]The Senate and House Reports on the Atomic Energy Act (S. Rep. No. 1699, 83d Cong., 2d Sess., *reprinted in* 1954 U.S. Code Cong. & Ad. News 3456, and H.R. Rep. No. 2181, 83d Cong., 2d Sess. (1954)), are paginated almost identically and collectively cited hereinafter as the "1954 Reports."

in consonance with both the common defense and security and the public health and safety.[23]

There can be no doubt that the Atomic Energy Act of 1954 impliedly preempted to the federal government regulation of all activities involving the possession and use of atomic energy, including construction and operation of nuclear power plants. As this Court noted in *Rice v. Santa Fe Elevator Corp.*, 331 U.S. at 230, an implied congressional preemptive purpose may be evidenced in several ways, *e.g.*, the scheme of federal regulation may be so pervasive as to make reasonable the inference that Congress left no room for the States to supplement it; the Act of Congress may touch a field in which the federal interest is so dominant that the federal system will be assumed to preclude enforcement of state laws on the same subject; or the object sought to be obtained by the federal law and the character of the obligations imposed by it may reveal the same purpose. *All* of these factors are present in the Atomic Energy Act, as initially adopted in 1954 and as still in effect.

The leading case to date on the issues at bench is *Northern States Power Co. v. Minnesota*, 447 F.2d 1143 (8th Cir. 1971), *aff'd, mem.*, 405 U.S. 1035 (1972) ("*Northern States*"), which held unequivocally that the Atomic Energy Act of 1954 preempted the field of regulation of the con-

---

[23]See 1954 Reports at 20, 1954 U.S. Code Cong. & Ad. News at 3475. The extensive and detailed statutory authority of the AEC and now the NRC over the construction and operation of nuclear power plants has been fortified and expanded by regulations promulgated by the Commission pursuant to 42 U.S.C. § 2201. The Congressional grant of independence and regulation-making authority to the NRC is virtually unique in the federal system. See *Illinois v. Nuclear Regulatory Commission*, 591 F.2d 12, 16 (7th Cir. 1979) (and cases cited therein); *Westinghouse Electric Corp. v. United States Nuclear Regulatory Commission*, 598 F.2d 759, 779 (3rd Cir. 1979).

struction and operation of nuclear power plants.[24] *Northern States* struck down a Minnesota attempt to regulate radioactive waste releases from a nuclear power plant. The Court of Appeals for the Eighth Circuit there observed that "regulation of radioactive effluents discharged from a nuclear power plant is inextricably intertwined with the planning, construction and operation of the facility." 447 F.2d at 1153. Following that observation, and an extensive analysis of the Act and its legislative history, *Northern States* concluded:

> . . . We hold that the federal government has exclusive authority under the doctrine of pre-emption to regulate the construction and operation of nuclear power plants, which necessarily includes regulation of the level of radioactive effluents discharged from the plant.

447 F.2d at 1154. Similarly, State Energy Commission regulation of interim storage of spent fuel and permanent disposal of high-level nuclear waste is "inextricably inter-

---

[24]*Northern States* for example declared: "Congress intended to pre-empt the field of the licensing and regulation of nuclear reactors to the exclusion of the states . . . ." 447 F.2d at 1151. "The value of the Joint Committee report as an explicit manifestation of the intent of Congrss that the federal government retain exclusive control over the construction and operation of nuclear reactors cannot be disputed." 447 F.2d at 1152. "While the Act, as amended, and its legislative history, when viewed together, provide the strongest manifestation of Congressional intent to pre-empt the field of regulation over the construction and operation of nuclear reactors, we also find further evidence of an implied Congressional intention to pre-empt this area by the pervasiveness of the federal regulatory scheme which Congress directed and which the AEC has carried into effect through the promulgation and enforcement of detailed regulations governing the licensing of atomic power plants." 447 F.2d at 1152-53. "The nature of the subject matter regulated and the need for uniform controls in order to effectuate the objectives of Congress are additionally supportive of a finding of preemption." 447 F.2d at 1153. "Thus, through direction of the licensing scheme for nuclear reactors, Congress vested the AEC with the authority to resolve the proper balance between desired industrial progress and adequate health and safety standards. Only through the application and enforcement of uniform standards promulgated by a national agency will these dual objectives be assured." 447 F.2d at 1153-54.

twined'' with nuclear plant construction and operation and thus impliedly preempted by the Atomic Energy Act, because of the pervasive federal regulation, the dominant federal interest, and the purposes of the federal legislation.[25]

2. The Challenged California Statutes Are Expressly Preempted by the 1959 Amendments to the Atomic Energy Act.

In 1959, Congress amended the Atomic Energy Act for the specific purpose, among others, of ''clarify[ing] the respective responsibilities under [the Act] of the States and the [AEC] with respect to the regulation of byproduct, source, and special nuclear materials.'' 42 U.S.C. § 2021(a)(1). Congress intentionally made certain in the 1959 amendment, Section 274 of the Act, 42 U.S.C. § 2021, that its ''clarification'' of the state and federal roles included language making explicit, or express, what already was implicit, or implied, in the Atomic Energy Act as adopted in 1954: That the Act establishes a preempted and exclusive field of federal regulation which includes the AEC's (now NRC's) regulation of nuclear power plant construction and operation.

The dispositive portions of Section 2021 are subsections (b) and (c).[26] Subsection (b) provides for the assumption of *limited* regulatory authority over nuclear matters by the States, through written agreements between the State Governors and the NRC,[27] and contains a specific exception for

---

[25]The Court of Appeals below never directly addressed the implied preemption effected by the Act as adopted in 1954, ignoring both the pervasive federal regulation and the dominant federal interest manifested in the Act.

[26]Subsection (k) is discussed *infra*.

[27]While California entered into such a written agreement in 1962 (Cal. Health and Safety Code § 25876), the provisions and scope the Warren-Alquist Act, as applied to nuclear power plants, and of Cal. Pub. Res. Code Sections 25524.1(b) and 25524.2, go far beyond the terms of that agreement and vastly exceed the limitations which California specifically agreed to accept as a condition of being granted the limited powers contemplated by 42 U.S.C. § 2021(b).

activities referred to in subsection (c). That subsection then addresses regulation of nuclear power plants as follows:

> (c) No agreement entered into pursuant to subsection (b) of this section shall provide for discontinuance of any authority *and the Commission shall retain authority and responsibiliy with respect to regulation of* —
>
> (1) *the construction and operation of any production or utilization facility*;[28]
>
> . . .
>
> (4) *the disposal of such . . . nuclear material* as the Commission determines . . . should, because of the hazards or potential hazards thereof, not be so disposed of without a license from the Commission. (Emphasis added).

The plain meaning of this statutory language is that the NRC has *exclusive* authority to regulate the construction and operation of nuclear power plants, including the interim storage of spent fuel and the permanent disposal of high-level nuclear waste. This plain meaning is buttressed by the report of the Joint Committee on Atomic Energy.[29]

---

[28]As defined in the Atomic Energy Act and implementing regulations, the term "utilization facility" includes nuclear power plants. 42 U.S.C. § 2014(cc); 10 C.F.R. § 50.2(b), (k). The AEC's General Counsel in 1969 interpreted 42 U.S.C. § 2021(c)(1) as applying to construction and operation of nuclear power plants. 10 C.F.R. § 8.4(e)(1).

[29]The Joint Committee report in referring to 42 U.S.C. § 2021 stated:

> (2) The bill applies to some, but not all, atomic energy activities *now regulated exclusively by AEC* . . . . Licensing and regulation of more dangerous activities — such as nuclear reactors — will *remain* the *exclusive* responsibility of the Commission. Thus *a line is drawn* between types of activities deemed appropriate for regulation by individual States at this time, and other activities where continued AEC regulation is necessary.
>
> . . . .
>
> Subsection c. of the bill *excludes* certain areas from an agreement under subsection b. between the Commission and the Governor of a State. These are areas which, because of their special hazards, or for reasons of Federal responsibility, are believed *desirable for continued responsibility by the Commission*. They

(footnote continued on following page)

The legislative history of the progress of Section 2021 through the Joint Committee demonstrates that the statute's clear, positive language to the effect that the AEC (now NRC) shall "retain authority and responsibility with respect to regulation of," *inter alia*, nuclear power plants was inserted in the statute for the very purpose of making clear the continued federal preemption of that and other subjects enumerated in Section 2021(c).[30]

---

include the construction and operation of production or utilization facilities, including reactors; . . . .

S. Rep. No. 870, 86th Cong., 1st Sess. at 8, 10 (emphasis added). The report also stated:

> [§ 2021] is *not* intended to leave any room for the exercise of *dual or concurrent* jurisdiction by States to control radiation hazards . . . . The intent is to have the material regulated or licensed *either* by the Commission *or* by the State . . ., *but not by both* . . . ." S. Rep. No. 870, 86th Cong., 1st Sess. at 9 (emphasis added). Regulation of the storage and disposal of nuclear waste is regulation to control radiation hazards. See 61 Op. Cal. Att'y Gen. 159, 166-67 (1978) and *infra* at 39-41, 46-48.

[30]An early version of what became Section 2021, submitted by the AEC to the Joint Committee, did not contain this language. See *Hearings Before the Joint Committee on Atomic Energy on Federal-State Relations in the Atomic Energy Field*, 86th Cong., 1st Sess. at 126-27, 301, 324 (1959) (hereinafter cited as "1959 Hearings"). When Robert Lowenstein of the AEC's Office of General Counsel appeared before the Joint Committee to explain the features and significance of this version of the statutory proposal, the following colloquy transpired between him and Committee counsel David Toll:

> Mr. TOLL: . . . Does this bill go far enough? Does it really clear the air as to whether or not the States have authority to license reactors and control shipments in interstate commerce? Should there be a statement that these activities are expressly preempted to the Federal Government? . . . Minnesota is just an example of the first State that has attempted to license reactors. It is clearly foreseeable, I would think, that other States are going to try to do this. Should this bill attempt to spell out whether or not they are encouraged or whether they have the legal authority to do this? . . . [I]t could be clarified by instead of saying, "No agreement shall provide for discontinuance of any authority by the Commission," it could say that and go further and say that "The Commission shall have sole responsibility for regulation with respect to," and then list the same activities. *Then the States would know, if this was the legislation, that these are areas in which they are to stay out.*
>
> . . . .

There remains the question of what Congress meant by "construction and operation" as used in Section 2021(c). That Congress deliberately chose such broad terminology shows a wide range of preempted subject matter was intended. AEC counsel Lowenstein testified that "construction and operation" was meant to include all aspects affecting operation of a nuclear reactor. Lowenstein explained that because of the interrelationship among such factors as possession and storage (of fuel and waste) at the site, design, construction procedures, and operating methods, the AEC has been unable to "cut up . . . into pieces" these related matters, and instead was proposing that federal control remain extended over the entire construction and operation process. 1959 Hearings at 306, quoted in *Northern States*, 447 F.2d at 1149, n. 6.

By providing that the AEC would "retain" authority over nuclear power plant construction and operation, which includes storage and disposal of nuclear wastes, 42 U.S.C. § 2021 makes clear that this was an *exclusive* authority already conferred by the Atomic Energy Act as enacted in 1954 which was now to be reaffirmed and carried forward. Thus, where regulation of spent fuel storage and nuclear waste disposal had initially been impliedly preempted, in

---

> Mr. LOWENSTEIN: We thought that this act without saying in so many words did make clear that there is preemption here, but we have tried to avoid defining the precise extent of that preemption, feeling that it is better to leave these kinds of detailed questions perhaps up to the courts later to be resolved.
>
> Representative DURHAM: I don't agree in writing an act like that. *I think it should be clearly defined and understood what is our field and what is their field.*

1959 Hearings at 307-08 (emphasis added). The Joint Committee then revised the language of the amendment to its present form, *i.e.*, to include the express provision for exclusive AEC regulation in almost exactly the words that had been suggested by the Joint Committee's counsel. See 1959 Hearings at 485-86, 502.

1959 such regulation became, and remains, expressly preempted by the federal government.[31]

3. Section 274(k) of the Atomic Energy Act, 42 U.S.C. § 2021(k), Does Not Justify the Decision of the Court of Appeals.

The Court of Appeals relied heavily upon 42 U.S.C. § 2021(k) as supposedly justifying its holding that the Atomic Energy Act permits state regulation of nuclear power plant construction and operation for any purpose except protection against radiation hazards. Subsection (k) provides that "[n]othing *in this section* shall be construed to affect the authority of any State or local agency to regulate activities for purposes other than protection against radiation hazards" (emphasis added).

The Court of Appeals misread Section 2021(k). When considered in context with subsection (c) of Section 2021, the legislative history of the Atomic Energy Act as originally enacted in 1946 and as amended in 1954 and 1959, and the pervasive federal preemption manifested in the Act itself,[32] subsection (k) clearly was not intended by Congress to authorize regulation by state and local agencies, *for any purpose*, of those matters pertaining to the construction and operation of nuclear power plants *which are subject to regulation by the NRC*. Instead, what Congress manifestly intended to authorize by Section 2021(k) was continued state

---

[31]The General Counsel for the AEC in 1969 reached the same conclusion:

> The Atomic Energy Act of 1954 had the effect of preempting to the Federal Government the field of regulation of nuclear facilities and byproduct, source, and special nuclear material. Whatever doubts may have existed as to that preemption were settled by the passage of the Federal-State amendment to the Atomic Energy Act of 1954 in 1959.

10 C.F.R. § 8.4(c) (footnote omitted).

[32]Subsection (k) refers only to Section 2021, as distinguished from the entire Atomic Energy Act. Thus subsection (k) has no impact upon the implied preemption effected by the Act as a whole.

and local agency regulation of matters pertaining to nuclear power plants which do not fall within the province of federal regulation — *e.g.*, the authority or responsibility to make decisions concerning the need for any additional electric power generating capacity, electric power ratemaking, non-radiological health and safety matters, etc. But Congress could not have intended regulation by a State — or a local agency such as a city or county — of such matters as the design of the nuclear reactor component of a nuclear power plant, the interim storage of spent fuel, or the permanent disposal of high-level nuclear waste, *whatever a state legislature, city council or county board of supervisors might declare to be the "purpose" of such legislation.*

The Court of Appeals itself recognized the absurdity of attributing such an intention to Congress when it said, in footnote 29 of its opinion:

> State regulations which directly conflict with regulations of the NRC would, of course, be preempted even if they were enacted for purposes other than protection against radiation hazards. If the NRC required a nuclear plant to be constructed in a certain way for safety reasons, for example, a state could not require the plant to be constructed in some other way for environmental reasons.

Citations omitted. (A. 33.) What the Court of Appeals did not understand is that this fundamental principle, which it relegated to a footnote, can only be given effect (1) by interpreting 42 U.S.C. § 2021(c) as being intended to preserve the exclusivity of the NRC's jurisdiction and actions in respect of those aspects of nuclear power plants committed to its regulatory authority and (2) by interpreting subsection (k) as being intended to acknowledge state authority *only over areas not regulated at all by the NRC*. Therein lies the central fallacy in the Court of Appeals' erroneous decision in this case.

The legislative history of the enactment of 42 U.S.C. § 2021 makes abundantly clear that Congress did not intend by subsection (k) to open the doors to state regulation of all aspects of nuclear power plant construction and operation provided only that the state is careful to declare that it is acting for some purpose other than to control radiation hazards. At the conclusion of the 1959 Hearings, the Joint Committee on Atomic Energy proposed to amend what is presently Section 2021(k) by adding this sentence:

> It is the intention of this Act that State laws and regulations concerning the control of radiation hazards from byproduct, source, and special nuclear materials shall not be applicable except pursuant to an agreement entered into with the Commission pursuant to subsection b . . . .

1959 Hearings at 488. Subsequently, the General Manager of the AEC sent a letter to Chairman Anderson of the Joint Committee recommending deletion of this sentence:

> At the hearing, we recommended the omission of the sentence . . . . In suggesting the elimination of the sentence, we did not intend to leave any room for the exercise of concurrent jurisdiction by the States to control radiation from those materials. Our sole purpose [in subsection (k)] was to leave room for the courts to determine the applicability of particular State laws and regulations dealing with matters on the fringe of the preempted area in the light of all the provisions and purposes of the Atomic Energy Act, rather than in the light of a single sentence.

1959 Hearings at 500. The change was further explained to the Joint Committee on Atomic Energy:

> Mr. Ramey: Is it not the Commission position, that without the lead-off language of subsection k, the same result is legally intended and legally effective?
>
> Mr. Lowenstein: Yes.
>
> . . . .

Chairman Anderson: You have preempted the field, have you not?

Mr. Lowenstein: Yes, Sir.

1959 Hearings at 492-93.

The reservation on behalf of the states contained in subsection (k) was designed solely to provide some latitude for the states to exercise their police powers when such state action does not deal with the actual construction and operation of a nuclear power plant or with radiation hazards, including interim storage of spent nuclear fuel and permanent disposal of high-level nuclear waste. But subsection (k) is not an affirmative grant of power to the states to impede the purposes of the Atomic Energy Act. Its function is "to leave room for [state laws] . . . dealing with matters on the fringe of the preempted area in the light of all the provisions and purposes of the Atomic Energy Act . . . ." 1959 Hearings at 500. The "fringe of the preempted area" certainly does not include such matters as determining the adequacy of interim storage of spent nuclear fuel, permanent disposal of high-level nuclear waste, or other matters pertaining to construction and operation of nuclear power plants.[33] Subsection (k) should not be interpreted to authorize the State Energy Commission to act as a "little NRC" regulating these and other aspects of nuclear power plant construction and operation.

4. Section 271 of the Atomic Energy Act, 42 U.S.C. § 2018, Does Not Justify the Decision of the Court of Appeals.

The Court of Appeals also relied upon 42 U.S.C. § 2018 to shore up its erroneous decision upholding Section 25524.2. Section 2018, a provision of the Atomic Energy

---

[33]This court accurately characterized subsection (k) when it said: "There is little doubt that under the Atomic Energy Act of 1954, state public utility commissions or similar bodies are empowered to make the initial decision regarding the need for power. 42 U.S.C. § 2021(k)." *Vermont Yankee Nuclear Power Corporation v. Natural Resources Defense Council, Inc.*, 435 U.S. at 550. This is exactly the type of matter "on the fringe" that the states may regulate — i.e., deciding whether any new power plants, nuclear or non-nuclear, are needed.

Act as initially adopted in 1954, provides that the Act shall not "be construed to affect the authority or regulations of any Federal, State or local agency with respect to the generation, sale, or transmission of electric power produced through the use of nuclear facilities licensed by the Commission." The Court of Appeals' reliance on the provision was misplaced. Section 2018 does not give the states plenary regulatory authority over nuclear power plant construction and operation, the interim storage of spent nuclear fuel, or the permanent disposal of high-level nuclear waste.

Section 2018 was enacted to assure that federal, state and local agencies would maintain their traditional authority over the transmission, sale and use of electric power *after it is generated by a nuclear power plant and enters the utility's electric power distribution system*. Thus, Senator Hickenlooper, the floor manager in 1954 of the Senate bill, explained: "We take the position that electricity is electricity. *Once it is produced* it should be subject to the proper regulatory body, whether it be the Federal Power Commission . . . or State regulatory bodies . . . . [§ 2018] is designed to keep the regulatory authority exactly as it is now, traditionally and under the law." 100 Cong. Rec. 12015 (1954) (emphasis added). Other statements by Senator Hickenlooper further underscored that what Congress intended to "preserve" by Section 2018 were pre-existing regulatory functions over electricity. See, *e.g.*, 100 Cong. Rec. 12198 (1954). As we have pointed out (20-21 *supra*), the states never did have authority over either atomic energy in general or nuclear power plants in particular. Thus, Section 2018 does not justify the Court of Appeals' decision.[34]

---

[34]The Court of Appeals asserted that Section 2018 permits the states "to treat nuclear plants [apparently in all areas] exactly as they would all other power plants." (A. 32.) Section 2018 says no such thing. It deals with state regulation of "electric power," and nothing more.

C. THE ATOMIC ENERGY ACT AND ITS AMENDMENTS MANIFEST A CONTINUING CONGRESSIONAL PURPOSE TO ENCOURAGE AND FOSTER THE PRIVATE DEVELOPMENT OF NUCLEAR POWER PLANTS AS ELECTRIC POWER RESOURCES FOR THE UNITED STATES.

The Supremacy Clause invalidates any state legislation — whatever its asserted purpose — that conflicts with a valid federal law, *i.e.*, " 'where compliance with both federal and state regulations is a physical impossibility . . .' or where the state 'law stands as an obstacle to the accomplishment and execution of the full purposes and objectives of Congress,' " *Ray v. Atlantic Richfield Co.*, 435 U.S. 151, 158 (1978) (citations omitted). Moreover, state legislation, the thrust of which is either preempted by or in conflict with federal law, cannot be redeemed by a state legislature's declaration of some otherwise valid state purpose. In *Perez v. Campbell*, 402 U.S. 637, 651-652 (1971), this Court refused any longer to follow "the aberational doctrine . . . that state law may frustrate the operation of federal law as long as the state legislature in passing its law had some purpose in mind other than one of frustration," because "such a doctrine would enable state legislatures to nullify nearly all unwanted federal legislation by simply publishing a legislative committee report articulating some state interest or policy — other than frustration of the federal objective — that would be tangentially furthered by the proposed state law."

The major purpose of the initial passage in 1954 of the Atomic Energy Act was to encourage the private development of nuclear energy for peaceful purposes. 42 U.S.C. §§ 2011-13. A similar objective underlies more recent amendments, such as the Price-Anderson Act, 42 U.S.C.

§ 2210. See *Duke Power Co. v. Carolina Environmental Study Group, Inc.*, 438 U.S. at 63-67.[35]

The Court of Appeals casually dismissed these continuing Congressional actions designed to encourage and foster nuclear power plant construction and operation, with the irrelevant remark that Congress has not shown "an intent to promote nuclear power at all costs." (A. 42.) Petitioners do not suggest that Congress desires nuclear power plants "at all costs." It nevertheless remains true that the enactment and amendment of the Atomic Energy Act clearly manifest a steadfast and continuing Congressional policy to encourage and foster the construction and operation of nuclear power plants under strict and comprehensive NRC regulation for the purpose of achieving a proper balance

---

[35]When Congress in 1975 extended the Price-Anderson Act to 1987, it reaffirmed the long-standing national policy of encouraging and fostering the construction and operation of nuclear power plants to serve the energy needs of the United States. Relevant portions of the congressional committee report on the 1975 extension show this exact purpose:

> The Joint Committee has received numerous letters . . . as well as testimony at the hearings [which] have stressed the importance of the [Price-Anderson] Act in removing a deterrent to development of the nuclear industry, and the need for prompt action to clarify the situation that will prevail after 1977 . . . . The committee considers the extension of the Price-Anderson Act during this session to be of great importance to the objectives of Project Independence as well as to the alleviation of the more immediate energy problems of the Nation.

S. Rep. No. 454, 94th Cong., 1st Sess. at 8, *reprinted in* 1975 U.S. Code Cong. & Ad. News 2251, 2258.

Similarly, the Federal Nonnuclear Energy Research and Development Act of 1974, 42 U.S.C. §§ 5901-20, underscored Congress' intent that "the policies and provisions of the Atomic Energy Act of 1954 . . . shall continue to apply to research, development and demonstration programs." 42 U.S.C. § 5902(b)(2). The Powerplant and Industrial Fuel Use Act of 1978 represents a Congressional attempt to foster use of electric power plants using nonpetroleum fuels, including uranium. 42 U.S.C. §§ 8301, 8302(a)(6)(A). And Section 101(d) of the National Nuclear Waste Policy Act of 1982, passed by the Senate on April 29, 1982 and pending in the House, expresses continued support for nuclear energy to produce electricity. These enactments manifest Congress' continuing commitment to the development of nuclear power for peaceful purposes.

between the development of additional energy and maintenance of the public health and safety. 42 U.S.C. §2013(d). Neither 42 U.S.C. § 2018 nor 42 U.S.C. § 2021(k), the provisions of the Atomic Energy Act relied upon by the Court of Appeals, manifests a Congressional intention to authorize the several States to prohibit or delay nuclear power development or to frustrate the authority and responsibility of the NRC to encourage and regulate such development.

In asserting that Congress has not shown "an intent to promote nuclear power at all costs," the Court of Appeals purported to rely on recent legislation. The Court first referred to the Energy Reorganization Act of 1974, 42 U.S.C. §§ 5801-5891, which transferred the AEC's regulatory functions to the NRC and its other functions to ERDA. The Court of Appeals saw in this legislation a Congressional purpose to place greater emphasis on the development of non-nuclear energy. Even if so, this does not suggest any dilution of Congress' interest in the further development of nuclear energy — much less any intention to permit the states to regulate the construction and operation of nuclear power plants, the interim storage of spent nuclear fuel, or the permanent disposal of high-level nuclear waste. If Congress had wished to slow the development of nuclear power in relation to other electric power sources, that policy surely would have been manifested in appropriate directions to the NRC and the Department of Energy — not by a delegation to the States of authority to regulate the construction and operation of nuclear power plants. Moreover, the Court of Appeals ignored the holding of the Second Circuit in *Natural Resources Defense Council, Inc. v. NRC*, that the passage of the Energy Reorganization Act of 1974 reflects Congressional approval of the NRC's regulation of nuclear power plant construction and operation, including that agency's decision to continue licensing such plants without waiting

until a permanent method of high-level nuclear waste disposal is in place.

The Court of Appeals also relied upon the Clean Air Act Amendments of 1977, 42 U.S.C. §§ 7416, 7422, which the Court observed "give states the authority to regulate radioactive air emissions from nuclear plants. States may, if they wish, establish emission standards more stringent than those imposed by the NRC." (A. 44.) The Court of Appeals drew exactly the wrong conclusion from this legislation, by which Congress enacted an explicit, limited grant of power to the Environmental Protection Agency ("EPA") and the States to deal with the single matter of airborne emissions from nuclear power plants. The Clean Air Act Amendments do allow the states to regulate nuclear power plant air emissions *but only to a limited extent*. The fact that Congress chose thus to legislate respecting radioactive air emissions does not undermine but, indeed, confirms the preemptive effect of the Atomic Energy Act with respect to all *other* matters committed to the jurisdiction of the NRC. Thus, the Clean Air Act Amendments reinforce petitioners' preemption claim, because they show that Congress recognized that it had to act specifically to permit limited state regulation in this *one* area.

Moreover, the regulatory grant of authority to the states under the Clean Air Act Amendments is of limited scope. The states are permitted to regulate radioactive emissions only if and after the EPA lists radioactive materials as pollutants. In addition, the NRC oversees implementation of state regulation and can veto any such regulation. 42 U.S.C. § 7422(c)(3). This new and limited regulatory scheme is hardly a rational basis for concluding that Congress has manifested a purpose to permit dual federal and state regulation of all aspects of nuclear power plant construction

and operation, including interim storage of spent nuclear fuel and permanent disposal of high-level nuclear waste.[36]

The Court of Appeals also relied upon the NRC Authorization Act for Fiscal Year 1980, Pub. L. No. 96-295, 94 Stat. 780, 783, which gives the states authority to enact siting and land use requirements which affect nuclear plants. (A. 45.) This law is also one of defined and limited scope. It does not confer upon the states the power to regulate the construction and operation of nuclear power plants, interim storage of spent nuclear fuel, or permanent disposal of high-level nuclear waste. To the contrary, the 1980 enactment, like the Clean Air Act Amendments and the Energy Reorganization Act of 1974, must be read and interpreted in the light of the Atomic Energy Act generally and 42 U.S.C. § 2021(c) specifically, which reserve to the NRC regulatory responsibility for the construction and operation of nuclear power plants and hence the authority to regulate the storage and disposal of spent nuclear fuel.

---

[36]The Court of Appeals for the Seventh Circuit in *Illinois v. General Electric Co.*, Nos. 81-2768, 81-2778, 51 U.S.L.W. 2055 (July 13, 1982) after finding that the Atomic Energy Act has a broad preemptive effect, rejected the argument that the Clean Air Act Amendments lessen that preemption, declaring: "Section 16 of the Clean Air Act qualifies federal powers only under that act. It does not purport to limit federal powers under other statutes, such as the Atomic Energy Act . . . ." Slip Op. at 16-17. The same conclusion was reached by the California Attorney General. 61 Op. Cal. Att'y Gen. 159, 174-175 (1978).

One purpose of the 1977 Amendments' inclusion of radioactive pollutants as subject to regulation under the Clean Air Act was to enhance "public confidence in nuclear power" and to "reduce public resistance to the generation of needed energy by nuclear powerplants." H.R. Rep. No. 294, 95th Cong., 1st Sess. at 43, *reprinted in* 1977 U.S. Code Cong. & Ad. News 1077, 1121. This hardly implies Congressional abandonment of the promotion of nuclear power but rather it argues for Congress' intent further to advance it.

D. CAL. PUB. RES. CODE SECTIONS 25524.1(b) AND 25524.2 ARE INVALID BECAUSE THEY ARE PREEMPTED BY AND IN CONFLICT WITH THE ATOMIC ENERGY ACT.

1. Sections 25524.1(b) and 25524.2 Are Invalid Because They Purport to Regulate Matters Within the Exclusive Regulatory Jurisdiction of the Nuclear Regulatory Commission Pursuant to the Atomic Energy Act.

Section 25524.1(b) authorizes and requires the State Energy Commission to *regulate* nuclear power plants by making determinations respecting the adequacy of their provisions for interim storage or reprocessing of spent nuclear fuel rods and by prohibiting construction of a particular nuclear power plant until the State Energy Commission is satisfied upon this score. This type of regulation falls directly within the subject matter preempted by the Atomic Energy Act as originally enacted and as clarified by 42 U.S.C. § 2021(c). Provision for the interim storage of spent nuclear fuel is indisputably an aspect of the "construction and operation" of a nuclear power plant. Authority to regulate such storage is clearly retained by the NRC pursuant to Section 2021(c)(1). Both legislative history and subsequent regulatory interpretation make it clear that the NRC's jurisdiction over the "construction and operation" of utilization facilities extends to control over possession and storage of nuclear fuel to be used in a nuclear power plant, the storage and disposition of nuclear materials produced in the operation of the plant, and the transportation of fuel to and from the site of the plant. 1959 Hearings at 306; 10 C.F.R. § 150.15(a)(1).[37] Moreover, the adequacy of a nuclear power plant's spent fuel storage capacity — on site or off site — is a matter determined by the NRC as part of

---

[37]An analysis by the AEC of a provision which ultimately became 42 U.S.C. § 2021(c)(1) declared that within the preempted regulatory field would be "the possession and storage at the site of the licensed activity of nuclear fuel . . . ." 105 Cong. Rec. 8384 (1959).

its licensing process under 42 U.S.C. § 2133 and implementing regulations. See generally, *Minnesota v. NRC*. Thus, Section 25524.1(b)'s provision for State Energy Commission regulation of spent fuel storage is directly preempted.

Section 25524.2 also regulates the construction and operation of nuclear power plants, by prohibiting construction work to install permanent equipment or structures for a nuclear power plant until the State Energy Commission determines that "there has been developed . . . and there exists a demonstrated technology or means for the disposal of high-level nuclear waste." Section 25524.2 invades a federally preempted area of regulation because 42 U.S.C. § 2021(c)(4) directly preempts for exclusive NRC regulation the disposal of nuclear material, the very matter with which Section 25524.2 is concerned.[38] Thus the regulation contemplated by Section 25524.2 is directly preempted.

2. Sections 25524.1(b) and 25524.2 Are Also Invalid Because the Atomic Energy Act Preempts State Regulation for Protection Against Radiation Hazards.

The Court of Appeals acknowledged that, at a minimum, the Atomic Energy Act preempts state regulation designed to afford protection against radiation hazards. Sections 25524.1(b) and 25524.2 constitute such regulation, and thus are preempted.

The State Energy Commission's Data Adequacy Report pertaining to PGandE's NOI for the Stanislaus nuclear power plant (A. 241) shows that the State Energy Commission deems itself empowered to regulate radiation hazards arising from, among other things, the interim storage of spent nuclear fuel and the permanent disposal of high-

---

[38]Section 2021(c)(4) provides that the NRC "shall *retain authority and responsibility with respect to regulation of* . . . (4) *the disposal of such* . . . *nuclear material* as the Commission determines . . . should, because of the hazards or potential hazards thereof, not be so disposed of without a license from the Commission." (Emphasis added.)

level nuclear waste. (A. 246-248.) In entering this regulatory field with respect to the Stanislaus NOI, the State Energy Commission relied upon its authority not only under Sections 25524.1(b) and 25524.2 but also under Cal. Pub. Res. Code Section 25511, which the Commission interprets as giving it responsibility for carefully scrutinizing every aspect of the safety and reliability of a nuclear power plant, including matters concerning "radiological health effects." (A. 223-225, 249-250.)

The Courts of Appeals for the Seventh Circuit recently interpreted the preemptive effect of the Atomic Energy Act, and in doing so both adopted *Northern States'* broad interpretation of the Act and declined to follow the opinion of the Court of Appeals below. *Illinois v. General Electric Co.*, Nos. 81-2768, 81-2778, 51 U.S.L.W. 2055 (July 13, 1982). The State of Illinois had attempted to prevent the shipment of spent nuclear fuel into the state for storage. Thus, the case presented issues identical to those presented here — to what extent can the states regulate storage and disposal of spent nuclear fuel? Relying upon the Atomic Energy Act's comprehensive scheme of federal regulation and the extensive NRC regulation in the field of storage and disposal of spent nuclear fuel, the Court held that the Act "preempts state regulation of the storage, and shipment for storage, interstate and intrastate alike, of spent nuclear fuel." *Illinois v. General Electric Co.*, Slip Op. at 16.[39]

The Seventh Circuit's decision was based upon that Court's perception that the Illinois regulation of shipment of spent nuclear fuel was enacted for the purpose of regu-

---

[39]Similarly, the Ninth Circuit recently declared preempted a State of Washington law that regulated importation of low-level radioactive waste. *Washington State Building and Construction Trades Council, AFL-CIO v. The Honorable John C. Spellman*, Nos. 81-3453, 81-3454, 81-3460 and 81-3461 (August 17, 1982). The parties had agreed that state regulation of high-level radioactive waste is preempted. The Court held state regulation of low-level wastes was equally preempted.

lating radioactive emissions. *Illinois v. General Electric Co.*, Slip Op. at 17. Similarly, the California Attorney General has opined that Sections 25524.1(b) and 25524.2 — and the rest of the 1976 Nuclear Laws — were enacted for the purpose of regulating radioactive emissions: "the effect of these statutes is to assert California's regulatory authority over radiological hazards." 61 Op. Cal. Att'y Gen. 159, 166 (1978). No other conclusion is possible. The two California statutes are therefore preempted.

3. Sections 25524.1(b) and 25524.2 Conflict With the Federal Regulatory Scheme Under the Atomic Energy Act.

Section 25524.1(b) authorizes the State Energy Commission to impose more exacting requirements respecting storage of spent nuclear fuel than those imposed by the NRC. The Draft Report of the State Energy Commission's Nuclear Fuel Cycle Committee indicates the Commission intends to do exactly that. (District Court Finding 10, A. 70-71; J.A. 156-72.) The Court of Appeals' determination that the "purpose" of the Warren-Alquist Act is not to protect against radiation hazards but to achieve other state objectives, if true, does not justify California's interference with the federal regulatory scheme. No state law can be valid, *whatever its purpose*, if it conflicts with a federal law[40] — an issue never addressed by the Court of Appeals.

By prohibiting new construction of nuclear power plants until the State Energy Commission makes an independent determination that "there has been developed . . . and there exists a demonstrated technology or means for the disposal of high-level nuclear waste," Section 25524.2 is in direct conflict with the Atomic Energy Act, which has been interpreted and administered by the NRC as permitting nuclear

---

[40]See *Ray v. Atlantic Richfield Co.*, 435 U.S. at 158; *Perez v. Campbell*, 402 U.S. at 651-52.

power plants to be constructed and operated even though the NRC has not yet approved a specific method of permanent disposal of high-level nuclear wastes — an interpretation and administration upheld by the federal courts as approved by Congress. See *Natural Resources Defense Council v. NRC*. Section 25524.2 thus flies in the face of the Congressional judgment that it is the responsibility of the NRC — not the several states — to strike "the proper balance between desired industrial progress and adequate health and safety standards." *Northern States*, 447 F.2d at 1154.[41]

The hallmark of the federal system is the intention and policy of Congress that there are to be *uniform national standards* administered by the NRC for the design and construction of nuclear power plants, including techniques for the storage and disposal of spent fuel. The California statutes conflict with this system and thus are invalid.

4. Sections 25524.1(b) and 25524.2 Frustrate the Fundamental Purpose of the Atomic Energy Act, Which Is to Encourage and Foster the Private Use of Nuclear Power for Peaceful Purposes Under Strict and Comprehensive Federal Regulation.

By conditioning construction of a nuclear power plant upon State Energy Commission approval of spent fuel storage, Section 25524.1(b) obstructs the congressional purpose of encouraging and fostering the development of nuclear power plants. This obstruction occurs both directly, as a

---

[41]The Court of Appeals tried to save Section 25524.2 by interpreting it to mean that "California is concerned not with the adequacy of the method [of nuclear waste disposal], but rather its existence." (A. 40.) As discussed *infra*, this interpretation is wrong. But even if it were correct, the State Energy Commission does not have the power to hold federal energy policy hostage by forcing the NRC to adopt a disposal method before new plants may be built in California. Section 25524.2 conflicts with federal law and regulation which allow new construction even though a method of high-level waste disposal is not yet in place.

result of the statutory *prohibition* on construction until such approval is granted, and indirectly because the extent of spent fuel storage recommended in the Draft Report of the State Energy Commission's Nuclear Fuel Cycle Committee (J.A. 171-72) is not required by federal law and would not be voluntarily provided by petitioners. (District Court Finding 10, A. 70-71.) Thus, the effect of Section 25524.1(b) is to obstruct construction of nuclear power plants that would qualify for federal licensing insofar as provision for spent fuel storage is concerned.

Section 25524.2 even more directly obstructs the Atomic Energy Act's manifest purpose of encouraging and fostering nuclear power plant development, by prohibiting construction of new nuclear power plants in California until the State Energy Commission makes specific findings pertaining to permanent disposal of high-level nuclear waste. That prohibition is in full effect today by virtue of the State Energy Commission's failure to make the requisite waste disposal findings, the Commission's January 1978 interim decision that those findings cannot be made (J.A. 416), and the concurrent Draft Report of the Commission's Nuclear Fuel Cycle Committee recommending that Section 25524.2's conditions not be deemed satisfied until the happening of events that the federal government foresees not occurring for at least another decade. The practical effect of Section 25524.2 has been and now is that petitioners have been forced to suspend and forego nuclear power projects that they would otherwise have commenced and prosecuted in California. Thus, Section 25524.2's obstruction of congressional purposes is concretely operative today and, for all that appears, is destined to remain in force for the indefinite future.

5. Section 25524.2 Was Enacted to Provide Protection Against Radiation Hazards. Even if it Had Been Enacted for Another Purpose It Would Be Invalid.[42]

The Court of Appeals' decision upholding Section 25524.2 is based upon three erroneous determinations. *First*, the Court interpreted the statute as prohibiting construction of nuclear power plants only until the State Energy Commission determines that the federal government has approved a method for the permanent disposal of high-level nuclear waste. (A. 40.) *Second*, the Court held that Section 25524.2 was enacted for purposes other than protection against radiation hazards. (A. 40.) *Third*, the Court held the Atomic Energy Act preempts only state laws that are enacted for the purpose of protection against radiation hazards. (A. 37.) All of these determinations are plainly wrong.

(a) Section 25524.2 Requires the State Energy Commission to Make an Independent Determination Whether a Satisfactory Method of Disposing of High-Level Nuclear Waste "Has Been Developed . . . and Exists."

Section 25524.2 explicitly provides that the State Energy Commission is required to make its own, *independent* determination whether "there has been developed . . . and there exists a demonstrated technology or means for the disposal of high-level nuclear waste." This meaning is confirmed by the report of the legislative committee that drafted Section 25524.2, which states: "the ability to dispose of (permanently store) high level radioactive waste [is] required to be addressed and resolved by the federal government *to the satisfaction of the State Energy Commission*, before any new nuclear plants can be certified." At 155

---

[42]Since the Court of Appeals held that petitioners' challenge to Section 25524.1(b) is not ripe for review, it did not address whether that statute is preempted.

(emphasis added).[43] That this is the correct interpretation of Section 25524.2 is also confirmed by the analysis of the statute contained in the Draft Report of the Commission's Nuclear Fuel Cycle Committee, which indicates that California intends to do far more than determine whether and when the federal government has approved a method of disposing of high-level nuclear waste. The Report discloses that the State Energy Commission is making its own investigation of nuclear waste disposal with a view to arriving at an independent evaluation as to whether a satisfactory technology or means for the disposal of the waste exists in fact. (J.A. 176-307.) The State Energy Commission would not need to devote such time and energy to this matter if its only obligation under Section 25524.2 was to determine when the United States has approved a method of waste disposal.[44]

---

[43]The report is entitled "Reassessment of Nuclear Energy in California: A Policy Analysis of Proposition 15 and its Alternatives" (1976) (hereinafter "the Reassessment"). R., Excerpt of Record in Court of Appeals Nos. 79-3365, 79-3382, Item No. 6.

[44]The State Energy Commission on July 10, 1980 docketed with the NRC a document entitled "California Energy Commission, Nuclear Fuel Cycle Committee, Statement of Position in the Matter of Proposed Rulemaking on Storage and Disposal of Nuclear Waste (Waste Confidence Rulemaking), July 7, 1980," wherein the Commission reiterated the views expressed in the Draft Report and its independent conclusion that a proven waste disposal technology does not exist. See also Tribe, *California Declines the Nuclear Gamble: Is Such a State Choice Preempted?* 7 Ecology L. Q. 679, 709 (1979), wherein the author states, "California seeks [by Section 25524.2] not to displace the federal government's expressed commitment to nuclear safety, but simply to insist this commitment be made meaningful." California obviously could not "insist" the commitment be made "meaningful" merely by determining if and when the United States has approved a method of waste disposal; California could only do so by independently determining whether "there exists a demonstrated technology or means for the disposal of high-level nuclear waste" (Cal. Pub. Res. Code Section 25524.2) — which is exactly what the State Energy Commission is doing. (J.A. 176-307.)

(b) The Purpose of Section 25524.2 Is to Provide Protection Against Radiation Hazards.

The Court of Appeals' determination that Section 25524.2 was "enacted for purposes other than protection against radiation hazards" (A. 2), based largely upon a misreading of the Reassessment, is wrong. That the statute was enacted for precisely the purpose of protection against radiation hazards is clear from its language: construction of nuclear power plants in California is prohibited until the State Energy Commission finds "that there has been developed . . . and there exists a demonstrated technology for the disposal of high-level nuclear waste." The very problem created by the existence of nuclear waste is the risk that it may cause radiation damage. The ultimate solution to the problem is to dispose of the waste permanently in a fashion which will eliminate the risk. An interim measure to reduce the risk of radiation damage is to prohibit the construction and operation of new nuclear power plants until there is assurance to the state that the nuclear waste they produce will be safely disposed of immediately upon its creation. Because that is precisely what Section 25524.2 does, there can be no escape from the conclusion that the purpose of the statute is to provide protection against radiation hazards.

This conclusion is fortified by consideration of the circumstances in which the statute was enacted. There was then pending in California a statewide initiative measure, Proposition 15, which if enacted would have prohibited any new nuclear power plants in California and required the gradual phasing out of existing plants.[45] The 1976 amendments to the Warren-Alquist Act, including Section 25524.2, were enacted as an alternative to Proposition 15, to go into

---

[45]The text of Proposition 15 is reprinted in the Reassessment at 159-63.

effect only if the initiative measure was defeated.[46] The legislative committee which drafted and proposed the 1976 Nuclear Laws published the Reassessment, which purported to provide California voters an objective analysis of Proposition 15 and an explanation of the bills which became the 1976 Nuclear Laws. The Reassessment deals at length with the radiological hazards created by nuclear power plants and their wastes and includes the following passage:

> The [State Energy] commission does not have clear and explicit authority to condition its approval on demonstrations of waste disposal safety or reactor safety, but the same problems could be addressed *indirectly* through reviews of the economics and reliability of the plant and through specific siting criteria (minimum distance from populated areas, minimum distance from active faults).

At 152-53 (emphasis added). This language makes clear the legislative committee's perception that (1) the Warren-Alquist Act as originally adopted did not give the State Energy Commission "clear and explicit authority" to regulate waste disposal safety, albeit the State Energy Commission's authority to review the "economics and reliability" of a nuclear power plant enabled the Commission to address the waste disposal problem "indirectly" and (2) the 1976 amendments were designed to confer upon the Commission explicit authority to regulate concerning radiation safety, including specifically the disposal of high-level nuclear wastes.

Further evidence that the primary purpose of the Warren-Alquist Act, as applied to nuclear power plants, and of the 1976 amendments to the Act is to provide protection against

---

[46]The Historical Note to the 1976 Nuclear Laws provides in part: "The provisions of this act shall not become operative if Proposition 15 of the June 1976 election is chaptered before or after such adoption. [Proposition 15, Nuclear Power Plants, was rejected by the people on June 8, 1976.]"

radiation hazards may be found in the construction and application of these statutes by the State Energy Commission. Prior to the filing of the instant action and the companion *Pacific Legal Foundation* case, the Commission had never denied that its principal concern in regulating the construction and operation of nuclear power plants is to achieve protection against the radiation hazards which such plants may create. This regulatory goal of the Commission is nowhere more evident than in its rejection letter and Data Adequacy Report in response to petitioner PGandE's NOI for the now-suspended Stanislaus nuclear power plant project. (A. 222-225, 246-250.) Both documents comment on myriad aspects of radiation safety in detailing the additional information which PGandE was told the NOI would have to include for the Commission's regulatory purposes.[47]

(c) A State Law Which Conflicts With the Atomic Energy Act or Frustrates Its Objectives Is Invalid Whether or Not the Purpose of the State Law Is to Provide Protection Against Radiation Hazards.

Even if Section 25524.2 had not been enacted to regulate protection against raidation hazards, the Court of Appeals erred because it ignored the teaching of *Perez v. Campbell*, that an otherwise valid state purpose cannot save a state law that conflicts with or frustrates the operation of federal law. A major flaw in both the Court of Appeals' analysis and its holding is that they look solely to the alleged "purpose" of Section 25524.2, which is not the dispositive issue in a preemption case. The proper inquiry is whether the state

---

[47]The State Energy Commission's NOI regulations also show an intent to regulate radiation safety by demanding a summary of the plant's "safety . . . systems," Cal. Admin. Code, Title 20, § 1720, App. A, § (c)(3)(1979); and a "preliminary description of any fuels, . . . wastes, or other toxic or hazardous substances associated with the proposed facility which may have an effect on safety and reliability; a discussion of the principal adverse effects of such substances on safety and reliability; and a discussion of the measures proposed or being considered by the applicant to ensure the safe handling, control, storage, removal, or disposal of such substances." *Id.* § (f)(1).

statute conflicts with federal law, regulation and policy. The effect of the Court of Appeals' erroneous analysis was to lead the Court to permit California to ban the development of nuclear energy by a strategy disapproved by this Court in *Perez v. Campbell*, 402 U.S. at 652, *i.e.*, "simply publishing a legislative committee report articulating some state interest or policy — other than frustration of the federal objective . . . ."

CONCLUSION.

It is respectfully submitted that the judgment below should be reversed, that Cal. Pub. Res. Code Sections 25524.1(b) and 25524.2 should be adjudged both ripe for judicial review and invalid because preempted by and in conflict with the Atomic Energy Act, and that the cause should be remanded to the Court of Appeals for reconsideration of its other rulings in light of this Court's opinion.

Respectfully submitted,

JOHN R. MCDONOUGH,
HOWARD B. SOLOWAY,
Counsel of Record,
BALL, HUNT, HART, BROWN
AND BAERWITZ,
Attorneys for Petitioners.

Of Counsel:
ROBERT OHLBACH,
RICHARD F. LOCKE,
DAN GRAYSON LUBBOCK,

JOHN R. BURY,
CHARLES R. KOCHER,
JAMES A. BEOLETTO.

Respondent's Brief

Office - Supreme Court, U.S.
FILED
NOV 23 1982
ALEXANDER L. STEVAS,
CLERK

No. 81-1945

IN THE
SUPREME COURT OF THE UNITED STATES

October Term, 1982

PACIFIC GAS AND ELECTRIC COMPANY and SOUTHERN CALIFORNIA EDISON COMPANY,
Petitioners,

vs.

STATE ENERGY RESOURCES CONSERVATION AND DEVELOPMENT COMMISSION, *et al.*,
Respondents.

Respondents' Brief

RALPH CAVANAGH
Natural Resources Defense Council, Inc.
25 Kearny Street
San Francisco, CA 94108
Counsel for Respondents-Intervenors

LAURENCE H. TRIBE
Counsel of Record
Chief Appellate Counsel
1525 Massachusetts Ave.
Cambridge, MA 02138
(617) 495-4621
ROGER BEERS
KATHRYN BURKETT DICKSON
Special Counsel
380 Hayes Street, Suite One
San Francisco, CA 94102
WILLIAM M. CHAMBERLAIN
General Counsel
DIAN GRUENEICH
Deputy General Counsel
California Energy Resources Conservation and Development Commission
1111 Howe Avenue
Sacramento, CA 95825
Counsel for Respondents

QUESTIONS PRESENTED

1. Where utilities have claimed that they could not proceed with nuclear plant construction unless and until an extensive array of state statutory barriers has been entirely removed, may an Article III court entertain a preemption challenge to only two of the statutes and do so where neither has yet been applied to any proposed nuclear plant, and where uncertainty remains as to the state and federal policies that would obtain if and when such an application were to arise?

2. Where Congress has expressly reserved to the states their traditional authority over the "generation, sale, or transmission of electric power" produced by nuclear as well as non-nuclear facilities; has expressly decreed that the delegation to the NRC of radiation-control authority over nuclear plants and fuels shall not be "construed to affect the authority of any state" to regulate the activities of NRC licensees "for purposes other than protection against radiation hazards;" and has entrusted *no* federal agency with authority to decide on the comparative cost and reliability of nuclear and non-nuclear fuel alternatives, may a federal court nonetheless decide that a state may not defer increased dependence on nuclear power pending resolution of uncertainties in nuclear waste storage and disposal issues that have convinced the state that alternative technologies will be cheaper and more reliable?

3. Where it is undisputed that Congress has enacted no federal requirement that public or private utility *owners* choose nuclear over non-nuclear sources of added generating capacity, may a federal court—as a matter of implied preemption—nonetheless impose such a federal requirement upon states that elect to *regulate* rather than to *own* the facilities for generating electrical power for their citizens?

TABLE OF CONTENTS

	Page
QUESTIONS PRESENTED	i
TABLE OF CONTENTS	iii
TABLE OF AUTHORITIES	v
STATEMENT OF THE CASE	1
I. INTRODUCTION	1
II. THE CHALLENGED PROVISIONS: THEIR ORIGIN AND PURPOSE	2
III. THE FEDERAL REGULATORY SCHEME	8
SUMMARY OF ARGUMENT	13
ARGUMENT	16
I. PETITIONERS' CONSTITUTIONAL CHALLENGE TO THE STORAGE AND WASTE DISPOSAL LAWS IS NOT RIPE FOR ADJUDICATION	16
A. Petitioners Have Themselves Argued That Their Putative Injuries Are Not Redressable by Invalidation of the California Laws That This Court Granted Certiorari to Review	17
B. The Specific Conflicts That Petitioners Conjure Between the Storage Law and NRC Requirements Pose No Issue Currently Ripe for Adjudication	18
C. The Hypothesized Conflicts Between the Waste Disposal Law and NRC Action Are Likewise Unripe for Judicial Assessment	21
II. THE ATOMIC ENERGY ACT LEAVES EACH STATE FREE TO DECIDE FOR ITSELF HOW BEST TO MEET ITS OWN ELECTRICAL ENERGY NEEDS AND THUS TO MAKE PRECISELY THE KINDS OF CHOICES WHICH CALIFORNIA HAS MADE	25
A. Nothing in the Atomic Energy Act Restricts the Substantive Criteria by Which a State May Choose the Mix of Nuclear and Non-Nuclear Energy Technologies on Which It Will Rely	25

Page

1. The Act expressly preserves such traditional state authority 25

2. There is no generic pro-nuclear mandate in the Act which limits the states in their exercise of this traditional authority 31

B. Nor Does the Atomic Energy Act Purport to Compel States to Leave the Choice Among Energy Technologies to Whoever "Owns" the Facilities for Generating Electricity, Free of Generic Review by Statewide Agencies 35

III. THE FACT THAT CALIFORNIA'S LAWS EXPRESSLY TAKE INTO ACCOUNT PROBLEMS OF NUCLEAR WASTE STORAGE AND DISPOSAL CREATES NO CONFLICT WITH THE NRC'S ROLE IN LICENSING NUCLEAR FACILITIES AND REGULATING RADIATION HAZARDS 41

A. Congress' Limited Grant of Radiation-Protection Responsibilities to the NRC Was Not Intended to Oust States of Jurisdiction Over Other Matters Relating to Nuclear Power Plants or Waste Storage and Disposal 41

B. Because California's Laws Were Motivated by Concerns Other Than the Safety of Its Citizens From Radiation Hazards, They Fit Squarely Within the Express Authority Affirmed by Section 274(k) of the Atomic Energy Act 47

C. Because California's Laws Do Not by Their Terms "Regulate" Radiation Hazards or Interfere With the NRC's Regulatory Scheme, They Cannot Be Considered Preempted in Any Event 51

CONCLUSION 55

TABLE OF AUTHORITIES CITED

CASES

	Page
Abbott Laboratories v. Gardner, 387 U.S. 136 (1967)	19
Alabama State Federation of Labor v. McAdory, 325 U.S. 450 (1945)	20
Arizona v. California, 283 U.S. 423 (1931)	48
Atkin v. Kansas, 191 U.S. 207 (1903)	36
Burford v. Sun Oil Co., 319 U.S. 315 (1943)	21
California v. Zook, 336 U.S. 725 (1949)	51
Cantor v. Detroit Edison Co., 428 U.S. 579 (197[illegible])	37
Cities of Statesville v. AEC, 441 F.2d 962 (D.C. Cir. 1969) (en banc)	41
Colorado Anti-Discrimination Comm'n. v. Continental Airlines, 372 U.S. 714 (1963)	51
Commissioner v. Glenshaw Glass Co., 348 U.S. 426 (1954)	47
Commonwealth Edison Co. v. Montana, 453 U.S. 609 (1981)	31
Crawford v. Board of Education, 102 S.Ct. 3211 (1982)	48
DeCanas v. Bica, 424 U.S. 351 (1976)	24, 46, 51
Detroit Edison Co. v. NRC, 630 F.2d 450 (6th Cir. 1980)	29
Exxon Corp. v. Governor of Md., 437 U.S. 117 (1978)	32
Federal Energy Regulatory Commission v. Mississippi, 102 S.Ct. 2126 (1982)	39, 40
Federal Trade Commission v. Standard Oil Company of California, 449 U.S. 232 (1980)	20, 24
First Iowa Hydro-Elec. Cooperative v. FPC, 328 U.S. 152 (1946)	26, 27
FPC v. Corporation Commission, 362 F.Supp. 522 (W.D. Okla 1973) (three-judge court), aff'd. mem., 415 U.S. 961 (1974)	52
Goldstein v. California, 412 U.S. 546 (1973)	53
Greene v. McElroy, 360 U.S. 474	39
Hannegan v. Esquire, Inc., 327 U.S. 146 (1946)	39
Heim v. McCall, 239 U.S. 175 (1915)	36
Huron Portland Cement Co. v. Detroit, 362 U.S. 440 (1960)	46
Illinois v. General Elec. Co., 683 F.2d 206 (7th Cir. 1982)	49
Jackson v. Metropolitan Edison Co., 419 U.S. 345 (1974)	37
Joseph E. Seagram & Sons, Inc. v. Hostetter, 384 U.S. 35 (1966)	20, 48
Kewanee Oil Co. v. Bicron Corp., 416 U.S. 470 (1974)	46, 51
Mak v. INS, 435 F.2d 728 (2d Cir. 1979) (Friendly, J.)	38
Mandel v. Bradley, 432 U.S. 173 (1977)	45
Marshall v. Consumers Power Co., 65 Mich. App. 237, 237 N.W. 2d 266 (1974)	29, 41
Maun v. United States, 347 F.2d 970 (9th Cir. 1965)	28
Merrill Lynch, Pierce, Fenner & Smith, Inc. v. Ware, 414, U.S. 117 (1973)	51
Minnesota v. Nuclear Regulatory Commission, 602 F.2d 412 (D.C. Cir. 1979)	11

Page

Morton v. Ruiz, 415 U.S. 199 (1974) 47
Natural Resources Defense Council, Inc. v. Nuclear Regulatory Comm'n., 547 F.2d 633 (D.C. Cir. 1976) 12
Natural Resources Defense Council, Inc. v. Nuclear Regulatory Comm'n., 582 F.2d 166 (2d Cir. 1978) 10
Natural Resources Defense Council, Inc. v. Nuclear Regulatory Comm'n., 685 F.2d 459 (D.C. Cir. 1982) 12
New Hampshire v. AEC, 406 F.2d 170 (1st Cir.), cert. denied, 395 U.S. 962 (1969) 41
New York Tel. Co. v. New York State Dep't. of Labor, 440 U.S. 519 (1979) 46, 51
Northern States Power Co. v. Minnesota, 447 F.2d 1143 (8th Cir. 1971), aff'd mem., 405 U.S. 1035 (1972) 34, 44, 45, 50, 51, 53
Perez v. Campbell, 402 U.S. 637 (1971) 47
Power Reactor Dev. Co. v. Int'l. Union of Elec., Radio and Mach. Workers, AFL-CIO, 367 U.S. 396 (1961) 9, 46
Public Service Co. v. NRC, 582 F.2d 77 (1st Cir.), cert. denied, 439 U.S. 1046 (1978) 29
Railroad Commission v. Pullman Co., 312 U.S. 496 (1941) 21
Ray v. ARCO, 435 U.S. 151 (1978) 46
Rice v. Santa Fe Elevator Corp., 331 U.S. 218 (1947) 25, 53
Silver v. New York Stock Exchange, 373 U.S. 341 (1863) 51
Simon v. Eastern Kentucky Welfare Rights Organization, 426 U.S. 26 (1976) 18
Toilet Goods Association v. Gardner, 387 U.S. 158 (1967) 21
United States v. E. C. Knight Co., 156 U.S. 1 12 (1895) 52
United States v. Rumely, 345 U.S. 41 (1953) 39
Valley Forge Christian College v. Americans United for Separation of Church and State, 102 S.Ct. 752 (1982) 16, 18
Vermont Yankee Nuclear Power Corp. v. Natural Resources Defense Council, Inc., 435 U.S. 519 (1978) 9, 12
Zobel v. Williams, 102 S.Ct. 2309 45

FEDERAL CONSTITUTIONAL PROVISIONS, STATUTES, AND REGULATIONS

Atomic Energy Act of 1954, 42 U.S.C. § 2011 et seq.
§ 1, 42 U.S.C. § 2011 32
§ 1, 42 U.S.C. § 2013 32
§ 1, 42 U.S.C. § 2013(d) 32
§ 101, 42 U.S.C. § 2131 9
§ 102(a), 42 U.S.C. § 2232(a) 41
§ 103(b), 42 U.S.C. § 2133(b) 41
§ 161(b), 42 U.S.C. § 2201(b) 41
§ 161(i)(2)&(3), 42 U.S.C. § 2201(i)(2)&(3) 41
§ 271, 42 U.S.C. § 2018 ..... passim
§ 271(b), 42 U.S.C. § 2018(b) 28

Page

§ 272, 42 U.S.C. § 2019 (1976) 26
§ 274(a)(2), 42 U.S.C. § 2021(a)(2) 42
§ 274(b), 42 U.S.C. § 2021(b) 15, 42, 43
§ 274(c), 42 U.S.C. § 2021(c) 15, 42, 43
§ 274(c)(1), 42 U.S.C. § 2021(c)(1) 9
§ 274(c)(4), 42 U.S.C. § 2021(c)(4) 9
§ 274(k), 42 U.S.C. § 2021(k) ..... passim

Clean Air Act Amendments of 1977:
§ 122, 42 U.S.C. § 7422 34

Department of Energy Organization Act:
42 U.S.C. §§ 7101 et seq. 34
42 U.S.C. §§ 7111, 7112 (Supp. IV 1980) 32
42 U.S.C. § 7133(a)(8)(c) 9

Energy Policy and Conservation Act:
§ 2B, 42 U.S.C. §§ 6201 (1976 & Supp. IV 1980) 32

Energy Reorganization Act of 1974:
42 U.S.C. §§ 5801–5891 33

Energy Security Act of 1980:
Pub. L. No. 96-294, 94 Stat. 611 32

Federal Photovoltaic Utilization Act:
42 U.S.C. §§ 8217, 8273 (1976 & Supp. IV 1980) 32

Federal Power Act:
16 U.S.C. §§ 791a–823 26
16 U.S.C. § 821 27
16 U.S.C. §§ 824–824k 26

National Energy Conservation Policy Act:
42 U.S.C. §§ 8211, 8251(2) (Supp. IV 1980) 32

National Environmental Policy Act:
42 U.S.C. §§ 4321 et seq. 9

NRC Authorization Act for Fiscal Year 1980:
Pub. L. No. 295, 94 Stat. 780 § 108(f) (1980) 35

Nonnuclear Energy Research and Development Act of 1974:
42 U.S.C. §§ 5901 et seq. 34
42 U.S.C. § 5903 34

Pacific Northwest Electric Power Planning and Conservation Act of 1980:
16 U.S.C. § 839b(e)(1) 35

Powerplant and Industrial Fuel Use Act:
§ 102(b), Pub. L. No. 95-620, 92 Stat 3289 (1978) 32

Price Anderson Act:
42 U.S.C. § 2210 (1976 & Supp. IV 1980) 50

Public Utility Regulatory Policies Act:
16 U.S.C. §§ 2601 et seq. (1976 & Supp. IV 1980) 33, 39, 40

Page

10 C.F.R.:
§ 8.4(a), (i) (1982) 41
Part 50, App. A, Criteria 60–64 (1981) 11

STATE CONSTITUTIONAL PROVISIONS AND STATUTES

California Constitution:
Article XI, § 9 (West 1954 & Supp. 1981) 36
California Government Code, §§ 6502, 6503.5, 6508 (West 1980) 36
Warren-Alquist State Energy Resources Conservation and Development Act, Cal. Pub. Res. Code, §§ 25000 et seq. (West 1954 & Supp. 1980) 6
§ 25001 6
§§ 25001–25007 6
§ 25005 6
§ 25005.5 6
§ 25216 6
§ 25216.5 6
§ 25309 ..... 6, 7
§ 25309(a) 6
§ 25309(j) 6
§ 25320 6
§ 25402 6
§ 25500 ..... 6, 17
§ 25500.5 6
§ 25502 17
§ 25503 17
§ 25504 17
§ 25511 ..... 7, 17
§ 25512 17
§ 25514 ..... 6, 17
§ 25514(d) 7
§ 25516 17
§ 25517 17
§ 25519 ..... 6, 17
§ 25520 17
§ 25523 ..... 6, 17
§ 25524 6
§ 25524.1(a) 19
§ 25524.1(b) ..... passim
§ 25524.1(c) 8
§ 25524.2 ..... passim
§ 25524.2(d) 22
§ 25524.2(e) 8
§ 25524.3 5
§ 25525 ..... 20, 48
§ 25531 21

Page

§ 25532 17
California Water Code, §§ 11295, 11575 (West 1971) 36
California Administrative Code:
title 20, § 1720, Appendix B & VI (A) (2) 7
title 20, § 1720, Appendix A, §§ (f) (1) & (6) (Sept. 22, 1979) 7
1915 Ala. Acts No. 746 § 4 at 867 27
1920 Ala. Acts No. 37, §§ 23–24, 49 at 48, 53 27
1931 N.C. Sess. Laws ch. 455 at 766–67 28
1941 N.M. Laws ch. 84, Preamble, §§ 17, 46 at 126–27, 132, 140–41 27–28
N.Y. Pub. Auth. Law, § 1005 (McKinney 19__) 36
1932 S.C. Acts No. 871, §§ 2(w), 4(a) & (b) 28
Wash. Rev. Code Ann., § 43.52.370 (West Supp. 1981) 36
1931 Wis. Laws ch. 183, § 3, ch. 475, § 7 at 315–17, 810 28

FEDERAL LEGISLATIVE MATERIALS

100 Cong. Rec. 10552-53 (1954) 33
100 Cong. Rec. 10559 (1954) 28
100 Cong. Rec. 11655 (1954) 33
100 Cong. Rec. 11661 (1954) 33, 40
100 Cong. Rec. 11688-89 (1954) 33
100 Cong. Rec. 11689 (1954) 27, 30
100 Cong. Rec. 12015 (1954) 26, 28
100 Cong. Rec. 12196-202 (1954) 26, 28, 30
100 Cong. Rec. 12198 (1954) 30
100 Cong. Rec. 12200 (1954) 26
H.R. Rep. No. 564, 95th Cong., 1st Sess. 141, reprinted in 1977 U.S. Code Cong. & Ad. News at 2653–54 34
Federal-State Relationships in the Atomic Energy Field: Hearings Before the Joint Comm. on Atomic Energy, 86th Cong., 1st Sess. (1959) 42
Proposed Amendment to Section 271 of the Atomic Energy Act of 1954: Hearings Before the Subcomm. on Legislation of the Joint Comm. on Atomic Energy, 89th Cong., 1st Sess. 4, 174–75 (1965) (AEC position) 28, 29
JCAE Press Release, June 24, 1954, Remarks at Luncheon Meeting of Int'l. Congress on Nuclear Engineering, at 3–4 26
S. Rep. No. 980, 93rd Cong., 2d Sess., reprinted in 1974 U.S. Code Cong. & Ad. News 5470, 5489 33
S. Rep. No. 272, 96th Cong., 1st Sess. 15–16 (1979) 35
S. Rep. No. 390, 89th Cong., 1st Sess. 4, 9–10 (1965) 28
S. Rep. No. 870, 86th Cong., 1st Sess. 12 (1959) 44
S. Rep. No. 1211, 79th Cong., 2d Sess. 14–15 (1946) 25
S. Rep. No. 1699, 83rd Cong., 2d Sess. (1954) 26, 33
S. 2568, 86th Cong., 1st Sess., reprinted in 1959 Hearings 44
Conf. Rep. No. 1445, 93rd Cong., 2d Sess., reprinted in 1974 U.S. Code Cong. & Ad. News 5539 34

Page

Congressional Research Service, Report on the Electric Utility Sector: Concepts, Practices and Problems 12 (Subcomm. Print 1977) 27
42 Federal Register 34391 (1978) 10
44 Federal Register 61373 (1979) 11

STATE LEGISLATIVE MATERIALS

Reassessment of Nuclear Energy in California: A Policy Analysis of Proposition 15 and Its Alternatives, 2, 12, 18, 154–55, 156 (1976) 5, 49

FEDERAL AGENCY MATERIALS

DOE, Spent Fuel Storage Requirements (No. RL-82-1, June 1982) 4
U.S. Dept. of Energy, Directorate of Energy Research, Report of Task Force for Review of Nuclear Waste Management, Draft, 12 (Feb. 1978) 13
Consolidated Edison Company of New York, Inc., (Indian Point Station, Unit No. 2) ALAB-453 [1975–1978 Transfer Binder] Nuclear Reg. Rep. (CCH) ¶ 30,265, at 28,411 & n.13 35
NRC, Information Report (SECY-80-220) at 2 (April 29, 1980) 30
Initial Written Statement on behalf of Baltimore Gas & Electric Co., et al, In the Matter of Amendment of 10 C.F.R. Part 51—Licensing of Production and Utilization Facilities, Docket No. RM-50-3 (Oct. 3, 1977) at VII-6 to VII-7 3
Memorandum from William J. Dircks, Executive Director for Operations, NRC, to NRC Commissioner Ahearne, February 19, 1982 Request for Data (March 8, 1982). 37
Midland Plant, Units 1 and 2, [1975–1978 Transfer Binder] Nuclear Reg. Rep. (CCH) ¶ 30,271, at 28,434-35 (1978) 9, 29
Phipps Bend Nuclear Plant, Units 1 and 2, [1975–1978 Transfer Binder] Nuclear Reg. Rep. (CCH) ¶ 30,342, at 28,803-05 (1978) 29
Remarks of Victor Gilinsky before the 10th Annual Illinois Energy Conference, October 13, 1982, reprinted in NRC Office of Public Affairs, News Release No. S-16-82 2
Interagency Review Group on Nuclear Waste Management, Report to the President, Draft, 35 (Oct. 1978) 13
President's Statement on Nuclear Policy, 12 Weekly Comp. Pres. Doc. 1630 (Oct. 28, 1976) 13

STATE AGENCY MATERIALS

California Energy Commission, 1977 California Energy Commission Biennial Report, Vol. VII, Table 2 36
California Energy Commission, Electricity Tomorrow—1981 Final Report 17 (1981) 7
California Energy Commission, Docket No. 77-NOI-4, Exh. 56 8

Page

California Energy Commission, Final Report on PG&E's Notice of Intention to Seek Certification for a Coal-Fired Power Plant—Fossil 1 & 2, Docket No. 77-NOI-4 (1979) 7
California Energy Commission, Preliminary Report on Electricity, Vol. 1, Ch. 9 (1982) 8
California Energy Commission, Final Report on PG&E's Notice of Intention to Seek Certification for the Combined Cycle Project, Docket No. 76-NOI-3 (1978) at 2–3, IV-19, VI-2 8
California Energy Commission, Final Report on Southern California Edison's Notice of Intention to File an Application for Certification of the California Coal Project, Docket No. 79-NOI-3 (1980) 7
Department of Water Resources, The California State Water Project —Current Activities and Future Management Plans, Bulletin 132-81, November 1981 36
In re Central California Gas Co., 13 Calif. R.R. Comm'n. Decision 508 (1917) 28
In re C.S.S. Forney, 1916 C Pub. Utilities Rep. 786 (Cal. R.R. Comm'n. 1916) 28

ARTICLES AND TREATISES

American Bar Association, The Need for Power and the Choice of Technologies: State Decisions on Electric Power Facilities (1981) 27
Atomic Industrial Forum, Electricity from Nuclear Power (July 1, 1982) 37
Atomic Industrial Forum, Historical Profile of U.S. Nuclear Power Development (December 31, 1981). 37
Bupp, "The Nuclear Stalemate," in Report of the Energy Project at the Harvard Business School 122 (R. Stobaugh & D. Yergin, eds., 1979) 48
I. Bupp & J. Derian, Light Water 5 (1978) 26
Holubowich, Carter's Timetable for High-Level Nuclear Waste Sites Begins to Slip, Nucleonics Week 1 (May 8, 1980) 13
Jones, Origins of the Certificate of Public Convenience and Necessity: Developments in the States, 1870–1920 79 Colum. L. Rev. 426 (1979) 27
Murphy & LaPierre, Nuclear "Moratorium" Legislation in the States and the Supremacy Clause: A Case of Express Preemption, 76 Colum. L. Rev. 392 (1976) 34

No. 81-1945

IN THE
SUPREME COURT OF THE UNITED STATES

October Term, 1982

PACIFIC GAS AND ELECTRIC COMPANY AND SOUTHERN CALIFORNIA EDISON COMPANY
Petitioners,

vs.

STATE ENERGY RESOURCES CONSERVATION AND DEVELOPMENT COMMISSION, *et al.*,
Respondents.

Respondents' Brief

STATEMENT OF THE CASE

I. INTRODUCTION.

On October 13, 1982, Commissioner Victor Gilinsky of the Nuclear Regulatory Commission ("NRC") addressed the concern underlying the state laws at issue in this case:

> I would like to take up with you the practical question: What are we going to do about the radioactive spent fuel that is piling up at power plants around the country? The storage pools at the plants are filling up and there is, at this point, no other place for the spent fuel to go.
>
> . . .
>
> In these circumstances it is natural to ask: Can plants expand their individual storage capacities sufficiently rapidly over the next few years to avoid curtailing reactor operation? And, to what extent can the industry count on the government's plans for permanent storage for the more distant future?
>
> . . .

> Much as I hope that current plans will work out, there have been too many failures and delays in federal nuclear waste planning for me to be confident of any schedule.[1]

California, recognizing these undeniable problems, has chosen to proceed cautiously in managing its dependence on nuclear energy for the electrical needs of its people. Petitioners invite this Court to conclude that Congress, without expressly saying so, has deprived states of this cautious option. This brief argues that it would be both premature and incorrect to accept that invitation.

II. THE CHALLENGED PROVISIONS: THEIR ORIGIN AND PURPOSE.

Two provisions are under review in this Court: Sections 25524.1(b) (the "storage law") and 25524.2 (the "waste disposal law") of the California Public Resources Code. The first was held unripe for review by the Ninth Circuit; the second was upheld as not preempted. Both laws address the state's perceived need for a continuous and assured fuel cycle for all power plants. The laws reflect California's concern about the wisdom of relying upon additional increments of nuclear generation until sufficient means exist to cope with the wastes that must be dealt with if nuclear reactors are to continue operating. As the Ninth Circuit observed, "[u]ntil a method of waste disposal is approved by the federal government, California has reason to believe that uncertainties in the nuclear fuel cycle make nuclear power an uneconomical and uncertain source of energy." A. 40.[2]

The basic facts regarding the nuclear fuel cycle are not in dispute here. Because each of the "fuel rods" in a nuclear plant provides useful power generation for only three years, a reactor must be periodically refueled and the "spent fuel" removed for storage or disposal. No one denies that reactors

---

[1] Remarks before the 10th Annual Illinois Energy Conference, October 13, 1982, *reprinted in* NRC Office of Public Affairs, News Release No. S-16-82.

[2] Respondents adopt the appendix and record citation abbreviations outlined in petitioners' brief at 1 n.4. Documents which have not been included in either the Appendix to Petition for Writ of Certiorari ("A.") or Joint Appendix ("J.A.") will be referenced to the district court's docket control numbers, e.g., "[R.10]," which are contained in J.A. 28-35.

will have to be shut down if there is insufficient storage space for the spent fuel such reactors generate.[3] The storage law accordingly requires that there be "adequate capacity" for storage of a plant's spent fuel rods "at the time such nuclear facility requires such . . . storage." This requirement was enacted because the storage capacity planned for new reactors seemed insufficient to assure their continued operation.[4]

The storage law also requires that each utility provide continuous, on-site, "full core reserve storage capacity"—"the capacity needed," as the Solicitor General puts it, "to permit storage of the entire reactor core, which may sometimes be removed to permit certain repairs of the reactor." S.G.Br. at 16 n.15. As the Solicitor General surmises, the State requires a full core reserve so as "to avoid additional costs in case of reactor repairs which might require removal of the core" because "[s]torage elsewhere might prolong the shutdown period required to make the repairs." *Id.* at 26 n.26.[5]

---

[3] *See* Affidavit of Terry R. Lash ¶ 10 [J.A. 419]; Affidavit of Dale G. Bridenbaugh ¶¶ 28-30 [J.A. 478-80]. Messrs. Lash and Bridenbaugh are experts on nuclear technology. Their affidavits, together with other affidavits and declarations, were filed in the district court in opposition to petitioners' motion for summary judgment. They will be referred to herein by the affiant's or declarant's last name, e.g., "Lash Aff. ¶. . . ."

[4] In practice, reactors are shut down approximately once a year for removal and replacement of one-third of their fuel. Since present-day power reactors have an expected useful operating life of approximately thirty to forty years but have on-site storage capacity for only five to ten years of spent fuel, off-site storage must be made available after that time. Uncontradicted evidence in the record below showed a substantial prospect that many currently operating reactors will have to shut down in the mid-1980's because of insufficient short term, on-site storage capacity. Bridenbaugh Aff. ¶¶ 25-30 [J.A. 447-80]; Lash Aff. ¶ 10 [J.A. 419]; Warren Dec. ¶ 27 [J.A. 449]; Cochran Aff. ¶¶ 6, 10-16 [R.88]. Indeed, one year after the two laws challenged here were enacted, petitioners acknowledged in a filing with the NRC that "[d]elays in closing the back end of the fuel cycle have forced reactor operators to accumulate larger-than-expected inventories of spent fuel in their storage pools" and that "it appears certain that additional storage facilities will be needed by 1981 or 1982 to avoid the possibility of shut down." Initial Written Statement on Behalf of Baltimore Gas & Electric Co. *et al.*, *In the Matter of Amendment of 10 C.F.R. Part 51—Licensing of Production and Utilization Facilities*, Docket No. RM-50-3 (Oct. 3, 1977) at VII-6 to VII-7.

[5] Petitioners, in their NRC filing (*see* note 4 *supra*) observe that a full core reserve "is not required by NRC for safety reasons," but acknowledge that "[f]ull core reserve has been traditionally maintained by utilities to maximize operational flexibility" because "the availability of space in the pool would minimize down time of the reactor. If there were no full

While the storage law guarantees that there will be adequate temporary, on-site storage capacity for spent fuel rods, with a full core reserve storage capacity, no one considers on-site storage to be an acceptable method of *permanent* waste disposal. Thus the federal government has been searching for a suitable method of permanent off-site disposal for almost thirty years, as discussed *infra* at 12–13. While the search continues, there remains the prospect, according to undisputed expert testimony in the district court, that any nuclear plant built in the State today might have to be shut down later because of the federal government's failure to develop in time such a means of *permanent*, *off-site* disposal.[6] For this reason, the waste disposal law requires, as a predicate to California's reliance on further increments of nuclear generation, "that there has been developed and that the United States through its authorized agency has approved and there exists a demonstrated technology or means for the disposal of high-level nuclear waste."

The Solicitor General now suggests that these reliability

---

core reserve, several months would be added to the outage while fuel was shipped offsite to make room in the pool." *Id.* at VII-5. According to the Department of Energy ("DOE"), studies have shown that it is *economically* important for a reactor to operate with a full-core reserve in its storage pool. DOE, *Spent Fuel Storage Requirements* 20 (No. RL-82-1, June 1982).

[6] Lash Aff. ¶¶ 10, 18-20 [J.A. 419, 421–22]. The prospect of such shutdowns—presumably by order of the NRC—exists not because it is feared that the NRC will *neglect* its duty to protect public health and safety, but precisely because the NRC's *fulfillment* of that mandate may lead it at some later date to order shutdowns of reactors in order to avert the continued generation of radioactive wastes that cannot be properly disposed of. On a number of past occasions, the NRC has issued shutdown orders for all nuclear power plants in the country which had generic safety problems of various kinds. Bridenbaugh Aff. ¶ 21 [J.A. 472, 475–76]. The Solicitor General's casual assertion that California's reliability concerns could be satisfied by adequate on-site storage, as required by the storage law (S.G.Br. at 38-39), simply does not take account of the possibility that shutdowns will later be deemed necessary because the technology of permanent waste disposal cannot be developed, and that such shutdowns may be ordered by the NRC for safety reasons. Nor does that argument recognize legitimate ratepayer concern for the prospect of having to pay for indefinite "temporary" storage long after the benefits of generating the electricity have ceased.

and economic concerns are "an afterthought" (S.G.Br. at 29), but it is undisputed that they were the reasons for enactment of the challenged laws *stated in the original report* of the legislative committee which proposed the bills.[7] That report, extensively reviewed by the Ninth Circuit (A. 38-40), explained that the laws were "designed to provide a pause in the deployment of nuclear power plants until . . . certain stipulated problems which may 'clog' the nuclear fuel cycle are resolved." Reassessment Report, note 7 *supra*, at 154–55. The lack of a federally approved method of waste disposal and the exhaustion of on-site storage were called "stipulated problems" because the Committee found that *all interested parties*, including industry and government, concurred in their existence. *Id.* at 2, 12. The legislative committee report described those problems as "largely economic or the result of poor planning, *not* safety related." *Id.* at 18 (emphasis in original). It observed that "waste disposal safety is not directly addressed by the bills, which ask only that a method be chosen and accepted by the federal government," and that "[r]eactor safety *per se* is not addressed by the bills." *Id.* at 156.

Nothing in the district court's findings suggests that the State's laws were addressed to, or motivated by, anything but the concerns for reliability and economics set forth in the Committee's report. Nevertheless, petitioners' *amici* urge reinstatement of the district court's judgment striking down the storage and waste disposal laws, on the newly proposed theory that these provisions constitute illegitimate "discrimination" against nuclear power. *See, e.g.*, S.G.Br. at 39; Brief

---

[7] After extensive hearings, the California Assembly Committee on Resources, Land Use and Energy issued its report on these two bills and a third, enacted as Section 25524.3 (which required a study of undergrounding of nuclear plants). *See Reassessment of Nuclear Energy in California: A Policy Analysis of Proposition 15 and Its Alternatives* 154 (1976) ("Reassessment Report"). The Chairman of this Assembly Committee was Charles Warren, also the principal author of the original Warren-Alquist Act (discussed *infra* at 6–7). Mr. Warren submitted a declaration to the district court, in which he reviewed the legislative history of the bills and reiterated that they were enacted for purposes of ensuring the reliability of nuclear power. J.A. 430-51.

of Edison Electric Institute at 3.

Both provisions, however, were simply amendments to a comprehensive energy planning and regulatory statute, the Warren-Alquist Act.[8] As such, these amendments represent but a specific application to nuclear power of the State's general determination, as expressed in Section 25001 of the Warren-Alquist Act, to "ensure that a reliable supply of electrical energy is maintained."[9]

The Warren-Alquist Act created a five-member body, the California Energy Commission,[10] with broad authority both to forecast future electrical energy demand and to evaluate and select energy facility sites and technologies so as to protect the State's environment and optimize the reliability and efficiency of the electricity generation system.[11] Fundamental to the discharge of the Commission's overall responsibilities is *the authority to evaluate competing electricity generation technologies and to choose those which should be approved for use in California.*[12]

---

[8] Warren-Alquist State Energy Resources Conservation and Development Act of 1974, as amended, Cal.Pub.Res.Code §§ 25000 *et seq.* (West 1954 & Supp. 1980). Hereinafter, all references to the provisions of the Warren-Alquist Act are to section numbers in the California Public Resources Code.

[9] The Warren-Alquist Act was prompted by a broad range of "future energy problems and uncertainties." § 25005.5. Of particular concern to the State was the "prevention of delays and interruptions in the orderly provision of electrical energy." § 25005. At the time the Act was passed, there was great uncertainty about the rate of growth in electrical energy demand, and all of the conventional technologies used for generating electricity (coal, oil, nuclear) were becoming more costly and less reliable, as a result of uncertain fuel supplies and the technological problems in satisfying state and federal environmental concerns. Warren Dec. ¶ 17 [J.A. 441–43].

[10] The official name of the agency is the "State Energy Resources Conservation and Development Commission." This has been shortened, by custom, to the "California Energy Commission" or "CEC."

[11] *See, e.g.*, §§ 25001–25007, 25309, 25500, 25500.5, 25514, 25519, 25523, and 25524. The Commission was also granted authority to collect information on oil, natural gas, and other forms of energy; to assess emerging trends related to the supply and demand of these energy resources; and to adopt energy efficiency standards to reduce unnecessary and wasteful uses of energy. *See* §§ 25216, 25216.5, 25309(a), 25320, and 25402.

[12] For example, the Commission is required to include, in its biennial forecast of electricity demand, a generic evaluation of commercially available electricity-generating technologies, including "the issues which may affect the ability to employ such technologies." § 25309(j). In licens-

The reliability criteria found in the storage and waste disposal laws at issue in this case parallel those implicit in the more general terms of the Warren-Alquist Act. *See, e.g.,* §§ 25309, 25511.[13] The Energy Commission has, indeed, applied similar criteria in its review of non-nuclear technologies. In fact, both the Warren-Alquist Act and the Commission's regulations place special emphasis on the need for a reliable "fuel cycle," including provision of adequate waste disposal systems, for *all* energy technologies employed in the State.[14]

As the Ninth Circuit concluded, the waste disposal law does not require the Energy Commission "to judge the safety of a

---

ing utilities to build new generation facilities, the Commission considers these and numerous other factors in determining "the acceptability and relative merit" of alternative facility siting proposals. § 25514(d).

[13] Thus, although the Solicitor General is literally correct that the "[a]pproval of coal-fired plants is . . . *not by statute* made contingent on a showing of future mining or environmental protection costs" (S.G.Br. at 39, emphasis added), he seems unaware that such matters *were* given specific consideration by the Energy Commission under its *general* statutory mandate in two licensing proceedings for coal-fired power plants proposed by petitioners PG&E and SCE. CEC, *Final Report on PG&E's Notice of Intention to Seek Certification for a Coal-Fired Power Plant—Fossil 1 & 2,* Docket No. 77-NOI-4 (1979); CEC, *Final Report on Southern California Edison's Notice of Intention to File an Application for Certification of the California Coal Project,* Docket No. 79-NOI-3 (1980). Moreover, the Solicitor General's assertion that oil-fired power plants are not "subject to a construction moratorium" (S.G.Br. at 39), ignores the Energy Commission's adopted policy to phase out half of California's current use of oil and gas to generate electricity by 1992. CEC, *Electricity Tomorrow—1981 Final Report* 17 (1981).

[14] Among the factors required by statute to be considered in licensing *any* power plant are the utility's "plans for transport, handling and storage of wastes and fuels." § 25511. For *all* proposed power plants other than geothermal, the Commission's regulations require the utility to provide "a preliminary description of any fuels, emissions, wastes or other toxic or hazardous substances associated with the proposed facility which may have an effect on safety and reliability," together with a "description of the principal adverse effects on safety and reliability associated with other aspects of the fuel cycle." Cal.Admin. Code, tit. 20, § 1720 Appendix A, §§ (f)(1) & (6) (Sept. 22, 1979). In licensing proposed geothermal power plants, the Commission's regulations require the utility to discuss the impact of the "waste disposal system" upon the "reliability" of the facility. *Id.* at Appendix B & VI(A)(2). Indeed, waste management has been a major issue in the two licensing proceedings conducted by the CEC reviewing proposals by the utility-petitioners, PG&E and SCE, for coal-fired power plants, referred to in note 13 *supra.*

proposed method of waste disposal" but rather "leaves that judgment to the federal government." A. 40. In other words, "California is concerned not with the *adequacy* of the method, but rather with its *existence*." *Id.* (emphasis added). The same may be said of the storage law. Both provisions reflect only the State's awareness that federal policies or programs may have a profound effect on the cost and reliability of particular power plants proposed to meet California's electrical energy needs.[15]

III. THE FEDERAL REGULATORY SCHEME.

Under the federal laws at issue here, DOE and the NRC have exclusive responsibility, respectively, for development and licensing of a permanent repository for disposal of nuclear wastes. 42 U.S.C. §§ 2021(c)(4), 7133(a)(8)(C). In addition, the NRC licenses nuclear power plants (including

[15] Indeed, Section 25514 of the Warren-Alquist Act requires the Energy Commission to analyze the implications, for *all* power plant proposals, of applicable federal standards, policies, and laws. Thus, in reviewing an *oil*-fired power plant proposed by petitioner PG&E, the Energy Commission identified fuel availability as a significant issue because of the uncertainties of possible federal fuel use restrictions and found that the plant's proposed water source was unacceptable because of the "current unsettled state of federal regulation." CEC, *Final Report on PG&E's Notice of Intention to Seek Certification for the Combined Cycle Project,* Docket No. 76-NOI-3 (1978) at 2-3, IV-19, VI-2. In reviewing PG&E's proposal for a *coal*-fired plant, the Commission similarly analyzed the impact of federal requirements on PG&E's coal supply, including the effect of preparation of a federal environmental impact statement and of potential coal supply regulation by federal agencies. CEC Docket No. 77-NOI-4, Exh. 56; *see* note 13 *supra*. The attention to federal policy in the laws here at issue is of the same character. When those laws were enacted, California was already heavily committed to nuclear power; indeed, seven nuclear power plants then operating or under construction are specifically exempted from the application of the two provisions. *See* §§ 25524.1(c) and 25524.2(e). Petitioners' *amici* speculate that California's deferral of commitments to additional nuclear power will injure the state's electricity consumers and increase the state's dependence on imported oil. S.G.Br. at 2, 7; Edison Electric Institute Br. at 3-4; Atomic Industrial Forum Br. at 2-3. But the determination of need is indisputably the state's responsibility, and the latest CEC staff projections for the next two decades show no new nuclear capacity will be required during that time. CEC, *Preliminary Report on Electricity,* Vol. 1, Ch. 9 (1982).

facilities for on-site spent fuel storage) to protect public health and safety from radiological hazards. 42 U.S.C. §§ 2021 (c) (1), 2131. But neither agency is empowered by the Atomic Energy Act to forecast electricity demand in a state or to decide how that demand should be met.[16] Indeed, *no federal agency* is charged with that responsibility—and, in determining whether a particular nuclear plant satisfies radiological protection standards, the NRC is not authorized to consider the impact of such standards on the *cost* of the plant, or on the *reliability* with which the plant will operate in producing electricity, or on whether *other energy technologies* would be cheaper and more reliable.[17]

Given the limited ambit of federal jurisdiction thus created by the Atomic Energy Act, the Ninth Circuit concluded that Congress "has not 'unmistakably . . . ordained' a goal of promoting nuclear power, but has instead regarded nuclear power as one *option* which the states may choose." A. 46 (emphasis added). In Sections 271 and 274 (k) of the Atomic Energy Act, the circuit court found express recognition of

---

[16] As this Court observed in *Vermont Yankee Nuclear Power Corp. v. Natural Resources Defense Council, Inc.*, 435 U.S. 519, 550 (1978), "[t]here is little doubt that under the Atomic Energy Act of 1954, state public utility commissions or similar bodies are empowered to make the initial decision regarding the need for power" while the NRC's "prime area of concern in the licensing context, on the other hand, is . . . public health and safety." The Court also noted that the National Environmental Policy Act ("NEPA"), 42 U.S.C. §§ 4321 *et seq.*, has "altered slightly the statutory balance," requiring the Commission to consider alternatives to the project. 435 U.S. at 551. But no one has ever suggested that the NRC's limited jurisdiction over need and alternatives under NEPA was intended to preempt any state authority over those issues.

[17] Green Aff. ¶¶ 31–32 [R.86]; *see also Power Reactor Dev. Co. v. Int'l Union of Elec., Radio and Mach. Workers, AFL-CIO*, 367 U.S. 396, 415 (1961) (the NRC "is absolutely denied any authority to consider [the] investment" that a utility has made in construction of a nuclear power plant, when acting upon an application for an operating license). Although NEPA mandated an increase in the NRC's "concern with the economics of nuclear power plants," "[i]n the scheme of things, [the NRC] leave[s] such matters to the business judgment of the utility companies and to the wisdom of the state regulatory agencies responsible for scrutinizing the purely economic aspects of proposals to build new generating facilities." *Midland Plant, Units 1 & 2*, [1975–1978 Transfer Binder] Nuclear Reg.Rep. (CCH) ¶ 30,271, at 28,434–35 (1978) (footnote omitted).

state authority to deny licenses to nuclear power plants when inconsistent with the State's power needs or environmental or economic interests. A. 43. Legislation since the 1954 Act, reviewed by the Ninth Circuit (A. 43–46), confirmed the absence of any congressional objective to promote nuclear over non-nuclear power.

The Ninth Circuit also held that the waste disposal law did not fall within the radiation-protection jurisdiction reserved to the NRC under the Atomic Energy Act. A. 46. In particular, the court held that Sections 271 and 274(k) of the Act expressly authorized the State Legislature's choice "to mandate reliance upon other energy sources until these uncertainties associated with nuclear power are resolved." A. 40.

Petitioners and their *amici* assert, however, that the California laws directly conflict with federal policy (Pet.Br. at 42; S.G.Br. at 21, 34)—specifically, with a 1977 decision of the NRC refusing to defer its own reactor licensing activities pending resolution of the waste disposal problem. But there is no dispute that, in this 1977 determination, the NRC addressed only whether *safety* considerations—not the continued *reliability* of reactor operation—require such a pause.[18] The NRC simply decided that, from a safety perspective, the federal government's failure as of that date to establish a means of waste disposal did not justify a mandatory nationwide moratorium on reactor licensing.

On the other hand, as the Solicitor General acknowledges,

---

[18] In 1977, the Natural Resources Defense Council ("NRDC") filed a petition with the NRC claiming that the Atomic Energy Act required the agency to consider the *safety* aspects of off-site waste disposal in determining whether to license reactors. The NRC denied the petition, stating that it had to examine only *on-site* safety risks in its licensing decisions. 42 Fed.Reg. 34391 (1978). The NRC was *not* asked to consider whether nuclear reactors were sufficiently reliable *investments* so long as the waste disposal problem remained unresolved, and did not address this issue. Nor was this issue raised in the review of the NRC's decision in *Natural Resources Defense Council, Inc. v. Nuclear Regulatory Comm'n.*, 582 F.2d 166 (2d Cir. 1978). As the court there stated, "[t]he issue in this case is whether NRC, prior to granting nuclear power reactor operating licenses, is required by the *public health and safety requirements* of the AEA to make a determination (in accordance with its rulemaking procedure) that high-level radioactive wastes can be permanently disposed of safely." 582 F.2d at 170 (emphasis added).

California's concern in the waste disposal law was that, "[i]f no means of disposal is developed, the hazards posed by highly radioactive waste produced in nuclear reactors will inevitably move the NRC to order operating power plants to shut down" at a later date. S.G.Br. at 22.[19] Similarly, while petitioners and their *amici* purport to find a conflict between the NRC's regulations for the on-site storage of spent fuel at nuclear reactors and the authority granted the Energy Commission to review the matter on a case-by-case basis in the storage law (Pet.Br. at 41; S.G.Br. at 25–26), the NRC's specifications for spent fuel storage capacities are likewise based solely on *safety* considerations and do not consider whether these capacities are sufficient to assure the reliable and cost-effective operation of the plant given the continuing failure to develop off-site waste repositories.[20] As discussed *supra* at 3–5, the storage law addresses the latter concern.

There is, moreover, considerable uncertainty how long the safety judgments of the NRC, as above described, will *remain* federal policy. In *Minnesota v. Nuclear Regulatory Commission,* 602 F.2d 412, 419 (D.C. Cir. 1979), the court ruled that the NRC had yet to make the kinds of determinations required for such judgments. As a result of that decision, the NRC in 1979 began a proceeding to reassess "[t]he degree of assurance now available that radioactive waste can be safely disposed of, to determine when such disposal or off-site storage will be available, and to determine whether radioactive wastes can be safely stored on-site . . . until off-site disposal or storage is available." 44 Fed.Reg. 61373 (1979). Again the sole focus of this proceeding has been the *safety* of waste storage and disposal—although its *outcome* may have decided implications for the *reliability* of continued reactor operations.[21]

---

[19] Even this is a substantial overstatement of the California position. Respondents contend that a state has a legitimate concern for the reliability of nuclear power plants because there is a reasonable basis for believing that the NRC *might* decide to order such shutdowns in the future. Whether the NRC "will inevitably" order shutdowns is not the issue.

[20] *See, e.g.,* 10 C.F.R. Part 50, App. A, Criteria 60–64 (1981).

[21] Another major NRC proceeding addressing the extent to which assessments of waste disposal technology should be factored into NRC reactor licensing—the "Table S-3" review—is similarly shrouded in controversy.

The NRC may later determine that reactors built now must be shut down because of the federal government's failure to develop a method of waste disposal. Indeed, there is a substantial prospect that even existing reactors will be shut down if the federal courts ultimately determine that the NRC's decisions and proceedings currently under review are fatally deficient. The very existence of this sort of controversy at the federal level—regardless of who is later held to be right—is a matter of concern to a state like California which seeks to invest in and depend upon energy sources that will not be subject to costly interruptions.

Finally, it must be stressed that for all the dispute over what to *do* in the face of such uncertainty, no one disputes that significant uncertainty persists on the question of when, if ever, a *solution* to the waste disposal problem will be developed. The successive failures to solve this problem in the past are detailed in a trial affidavit included in the Joint Appendix at 415–29 (Lash Aff.). DOE's current projection is that the nation's first nuclear waste repository will be in operation sometime between 1999 and 2006. S.G.Br. at 18. But, in the last six years, the federal government's projected operation date for the first repository has slipped a total of 14 years—under the most optimistic scheduling.[22]

Table S-3 attempts to quantify the environmental impacts of the nuclear fuel cycle for use in individual NRC licensing proceedings, pursuant to NEPA. It does not address the impact of the lack of a permanent waste disposal technology on power plant reliability or economics. But the outcome of prolonged federal litigation over the Table may affect the validity of existing reactor licenses issued under the various versions of the Table formulated by the NRC. The original Table S-3 was invalidated by a court of appeals in *Natural Resources Defense Council, Inc. v. Nuclear Regulatory Comm'n,* 547 F.2d 633 (D.C. Cir. 1976), and that decision was in turn reversed in *Vermont Yankee Nuclear Power Corp. v. Natural Resources Defense Council, Inc.,* 435 U.S. 519 (1978). This Court remanded that case so that the court of appeals could determine if Table S-3 was supported by the administrative record. Earlier this year the same court of appeals invalidated Table S-3 for the second time. *Natural Resources Defense Council, Inc. v. Nuclear Regulatory Comm'n,* 685 F.2d 459, 481 (D.C. Cir. 1982).

[22] In October 1976, a presidential statement set 1985 as the date for a repository. President's Statement on Nuclear Policy, 12 *Weekly Comp. Pres. Doc.* 1630 (Oct. 28, 1976). In February 1978, federal authorities moved the date from 1985 to 1988. U.S. Dep't of Energy, Directorate of Energy Research, *Report of Task Force for Review of Nuclear Waste Management,* Draft, 12 (Feb. 1978). In October 1978, the date slipped

Even if the first repository were available in 1999, it would not necessarily relieve the spent fuel storage requirements for any specific reactor—since *many* repositories, not just one, will be required to dispose of all of the wastes from all of the currently operating reactors.[23] Indeed, the NRC and EPA have yet to establish the licensing criteria for even the first repository. All that can be said with certainty is that the matter remains shrouded in *un*certainty—and that California has chosen to wait rather than gamble.

SUMMARY OF ARGUMENT

I. The utilities claim that they could proceed with construction of nuclear plants in California only if relieved of an entire array of state statutes that were held unripe for review (or in some cases not preempted) by the Ninth Circuit and were properly left undisturbed by this Court's limited grant of certiorari. Thus, petitioners' challenge to California's nuclear waste storage and disposal laws is not ripe for review even as an Article III matter, inasmuch as the utilities themselves have conceded that invalidation of these two laws would not in fact redress their grievances. Moreover, petitioners' abstract objections to the storage and waste disposal laws are not appropriate for review at this time because prudential considerations dictate that state agencies and state courts be granted an opportunity to apply those laws to petitioners or otherwise construe them, and because the federal "policies" that are said to conflict with the state's laws are not only unresolved, but indeed address regulatory concerns different from those advanced by California law.

II. The Atomic Energy Act reflects only a limited federal interest: the protection of public health and safety from the radiation hazards posed by such nuclear power facilities as utilities and their state regulators choose to utilize for their

---

to "between 1988 and 1992." Interagency Review Group on Nuclear Waste Management, *Report to the President*, Draft, 35 (Oct. 1978). In President Carter's 1980 message on nuclear waste disposal, the new target became "about 1995." Holubowich, *Carter's Timetable for High-Level Nuclear Waste Sites Begins to Slip*, Nucleonics Week 1 (May 8, 1980).

[23] Cochran Aff. ¶ 16 [R.88].

electrical energy needs. Indeed, Congress was careful in Section 271 of the Act to preserve full state authority "with respect to the generation, sale, and transmission of electric power produced through the use of nuclear facilities." The Act thus leaves each state free to decide for itself how best to meet its own energy needs, and allows each state to consider for itself the comparative cost, reliability and efficiency of proposed sources of needed electric power—the very kinds of technology choices embodied in the challenged provisions of California law. In attending to these matters with respect to non-nuclear power sources, California considers possible clogs in the fuel cycle, including those that might stem from compliance with federal policies in other areas. By preventing California from asking precisely the same kinds of questions with respect to nuclear power, petitioners' theory of implied preemption would directly conflict with Section 271 since it would prevent California from meaningfully exercising its traditional authority over the generation of electricity, whenever its source happened to be nuclear rather than non-nuclear—even though no federal agency has ever been empowered to ask the questions and make the choices California asks and makes on behalf of its citizens.

Such conflict with Section 271 cannot be justified, as petitioners would have it, by broad policy statements in the introductory provisions of the 1954 Act. These provisions certainly express an interest in encouraging nuclear development, but do not express a federal mandate in favor of nuclear over non-nuclear power any more than similar statements, in other laws, of congressional intent to encourage development of coal, solar photovoltaics, geothermal energy, or energy conservation, express a mandate in favor of *those* technologies.

Moreover, because the challenged state statutes regulate the choice of energy-producing technologies by the State's *own utilities,* it follows that petitioners' theories of preemption would leave states that seek to protect their citizens from unwise investments in new nuclear facilities with no option but to take over the management of their utility companies. Such federal intrusion into a state's internal decision-making

would raise far-reaching questions that should be avoided absent the clearest statement of congressional intent to reallocate the structure of state choices—a statement of intent entirely absent from the Atomic Energy Act.

III. Nor is a different result suggested by the fact that California's misgivings with respect to the cost and reliability of nuclear power plant proposals derive from problems specifically associated with the storage and disposal of nuclear waste. In the 1959 amendments to the Atomic Energy Act, Congress expressly defined the federal and state spheres of regulatory authority over nuclear power: whereas Sections 274(b) and (c) of the Act require the NRC to "retain" its existing authority to protect "the public health and safety from radiation hazards" posed by the operation of nuclear reactors and by the disposal of their wastes, Section 274(k) affirms state authority to regulate these same activities "for purposes other than protection against radiation hazards." Accordingly, the ongoing NRC proceedings that are alleged to conflict with the state's waste disposal law relate only to the *health and safety aspects* of nuclear waste disposal. By contrast, both challenged state provisions address the *economic and reliability aspects* of waste storage and disposal—specifically, the potential costs and delays of inadequate on-site storage and the unreliability of further dependence upon nuclear power pending final federal resolution of the long-term waste disposal problem. The Ninth Circuit found that these economic and reliability concerns, stated from the outset to be the State's aims, were indeed the purposes that motivated the laws at issue. These state provisions thus fit squarely within the express authority affirmed by Section 274(k).

Finally, even if one were to speculate that fears of radiation, as such, had motivated the California laws—something not even the district court found in this case—there would be no ground for holding the laws preempted. For the challenged provisions do not "regulate" radiation hazards at all and do not conflict in the slightest with any federal requirement or policy. Because California's statutory scheme can be fully reconciled with federal law, the challenged provisions should not be struck down.

ARGUMENT

I. PETITIONERS' CONSTITUTIONAL CHALLENGE TO THE STORAGE AND WASTE DISPOSAL LAWS IS NOT RIPE FOR ADJUDICATION.

Petitioners' *amici* purport to find in this case a vehicle for the redress of a varied assortment of national energy problems.[24] Yet, with striking candor, petitioners themselves have advised the Court that their own grievances *will not in fact be redressed* by a favorable decision herein. Petitioners thus request that this Court "hospitably accept for adjudication claims of constitutional violation by other [levels] of government," without the case or controversy required by Article III. *Valley Forge Christian College v. Americans United For Separation of Church and State,* 102 S.Ct. 752, 759 (1982). The statutes they seek to invalidate have, moreover, never been applied to petitioners, and in the absence of a more fully developed factual record, their claims are otherwise unripe for adjudication.[25]

---

[24] Br. of Atomic Industrial Forum at 2–3; Br. of Edison Electric Institute 3–4.

[25] Nor have petitioners or their *amici* ever responded to the position of Judge Ferguson, concurring in the circuit court's ruling, that the Atomic Energy Act creates *no implied right of action* for private utilities seeking anticipatory relief of the sort the district court awarded here. A. 47.

A. *Petitioners Have Themselves Argued That Their Putative Injuries Are Not Redressable by Invalidation of the California Laws That This Court Granted Certiorari to Review.*

Petitioners have admitted that redress of their grievances will not be accomplished by invalidation of the two provisions under review, but only by invalidation also of twelve other provisions of the Warren-Alquist Act, referred to as the "certification system statutes." [26] In their Reply Brief in Support of the Petition for Certiorari, petitioners "put the matter bluntly":

> "Unless and until the California certification system statutes are reviewed and at least largely invalidated, *petitioners will not again undertake to build nuclear power plants in California.*" *Id.* at 6 (emphasis added).

As petitioners now emphasize in their opening brief on the merits, it is their view that the certification system "makes it impossible" for petitioners to proceed with construction of nuclear power plants. Pet.Br. at 11–12.[27]

---

[26] These twelve provisions—Cal. Pub. Res. Code §§ 25500, 25502, 25504, 25511, 25512, 25514, 25516, 25517, 25519, 25520, 25523, and 25532—are the central features of the state's power plant licensing scheme. They were invalidated by the district court. A. 83–86. In the main, they require that information be gathered on a variety of issues and considered by the Energy Commission in its review of all power plants proposed by utilities. With one exception, the Ninth Circuit held that these provisions were not ripe for adjudication, because, *inter alia*, "we have no way of knowing what types of information the Energy Commission might require of the utilities, or to what purposes the information might be put." A. 20–21. The remaining provision—Section 25503, dealing with the requirement that three sites be identified for each proposed plant—was held not to be preempted. A. 40–42. The Ninth Circuit decision with respect to these statutes is, of course, left intact by this Court's limited grant of *certiorari*.

[27] Petitioners thus include among the "two principal reasons" for their suspension of the Stanislaus Nuclear Project, not only the impact of the two provisions now under review but also "an *equally unacceptable risk* of conflicting determinations pertaining to the same issues between the State Energy Commission and the NRC that would preclude or substantially delay governmental approval of the Stanislaus project." Pet.Br. at 12 n.20 (emphasis added). The latter "risk" has nothing to do with the statutes at issue before this Court but instead reflects PG&E's purported concern about concurrent regulation of a variety of subjects within the jurisdiction of both agencies, beyond those encompassed by the storage and waste disposal laws.

They attempt to circumvent this Court's limited grant of review and reclaim the only relief which they consider meaningful by arguing "that the cause should be remanded to the Court of Appeals for reconsideration of its other rulings." [28] However, as an "irreducible minimum," Article III requires a complainant seeking to invoke the jurisdiction of a federal court to demonstrate not only that his injury " 'fairly can be traced to the challenged action' " but also that it "is likely to be redressed by favorable decision." *Valley Forge Christian College v. Americans United for Separation of Church and State,* 102 S.Ct. 752, 758 (1982), *quoting Simon v. Eastern Kentucky Welfare Rights Organization,* 426 U.S. 26, 41 (1976).

Apparently petitioners hope that this Court, in ruling on the validity of the storage and disposal laws, will also give the State of California a general lecture on the limits of its authority to act under other laws, thereby allowing petitioners to reconsider their current decision not to proceed with planning for nuclear plants and perhaps resulting in a kind of "after-the-fact redressability." But petitioners cannot establish that any decision of this Court is likely to redress their grievances merely on the basis of their own speculation that this Court's opinion *might* contain broad dicta which *might* cast doubts on statutory provisions not now before the Court.

B. *The Specific Conflicts that Petitioners Conjure Between the Storage Law and NRC Requirements Pose No Issue Currently Ripe for Adjudication.*

Even if petitioners' grievances were redressable by invalidation of the two provisions under review here, that decision would have to be made without knowing how these laws would in fact be applied to petitioners by the Energy Commission. On this basis, the Ninth Circuit held that petitioners' challenge to the storage law in particular was not ripe for

---

[28] Pet.Br. at 49. Thus petitioners' description of the challenged state provisions contains as much discussion of the provisions *not* covered by the Court's order granting *certiorari* as it does of the two sections actually at issue. *See* Pet. Br. at 7–9. Petitioners' theory of preemption would invalidate virtually any state licensing requirements for nuclear power plants to the extent that the State attempted to examine subject matters (e.g., geology, seismology, etc., of the power plant site) also examined by the NRC. Pet.Br. at 20–37; *see also* Pet. for Cert. at 12–24.

review. A. 25. In this Court, petitioners and their *amici* present no satisfactory reason to depart from the prudential limitations upon a federal court's review of state enactments which have not been given authoritative interpretation by the relevant state agency or by the State's courts.

Deciding whether this challenge is ripe for review requires balancing "the fitness of the issues for judicial decision and the hardship to the parties of withholding court consideration." *Abbott Laboratories v. Gardner,* 387 U.S. 136, 149 (1967). Both sides of the balance weigh against ripeness. In the first place, no hardship to petitioners is presented by deferring judicial review of the storage law. Petitioners' assertion that this law in itself stands as an "absolute barrier" to construction of a nuclear power plant (Pet.Br. at 19) is belied by the very terms of that provision. While Section 25524.1(a), which is not at issue here, requires the Energy Commission to deny certification to a nuclear plant unless it can make certain generic findings regarding the availability of reprocessing, subsection (b)—the storage law itself—merely requires the Commission to "find on a *case-by-case basis* that facilities with adequate capacity" to store spent fuel rods will be available when needed.

Because the Energy Commission has never been asked to review any utility's plans for spent fuel storage under this provision, the Ninth Circuit quite properly concluded that "we cannot know whether the Energy Commission will ever find a nuclear plant's storage capacity to be inadequate." A. 25. Accordingly, it held petitioners' challenge to this provision unripe. Indeed, if the waste disposal law is not overturned, the storage law may not even become *relevant* for decades (if ever) and surely causes no injury and creates no justiciable controversy *now*.

Nor are the *issues* which petitioners seek to raise concerning the storage law "fit for judicial decision." Petitioners rely here, as they did in the Ninth Circuit, on a draft report of the Commission's two-member Nuclear Fuel Cycle Committee to show that the full Commission "intends" to impose "more exacting requirements respecting storage of spent nuclear fuel than those imposed by the NRC." Pet.Br. at 41.[29]

---

[29] As discussed *infra* at 53, even if the storage law were implemented in this

However, petitioners ignore the Ninth Circuit's reminder that "the Energy Commission *has not adopted* such a requirement." A. 25 (emphasis added).[30] There is thus no final agency action which would allow the Court to know how California will interpret and apply the storage law in the future. *Cf. Federal Trade Commission v. Standard Oil Co. of California,* 449 U.S. 232, 239–42 (1980).

The mandate of Section 25525 of the Warren-Alquist Act further undermines petitioners' contention that there is a clear and present conflict between implementation of the spent fuel storage provision and federal policy. That section directs the Energy Commission not to "make any finding in conflict with applicable federal law or regulation." [31] Thus, there is no reason to assume that the Commission will ever interpret or implement the storage law in a way which conflicts with federal law or that, given the opportunity, the state courts would fail to require conformity with federal law.[32]

---

fashion, it would not constitute a preempted regulation of radiation hazards. Indeed, the Nuclear Fuel Cycle Committee's draft report made recommendations for the purpose of "lessening . . . the threat to continued operations and [promoting] an ability to make affirmative findings on a case-by-case basis under Section 25524.1(b)." J.A. 169.

[30] The Nuclear Fuel Cycle Committee Report is only an indication of the views of two of five members of the Energy Commission in 1978. The Committee Report itself makes clear in its opening notice that it does not constitute final, official action by the agency. *See* J.A. 36. The full Commission's decision of January 25, 1978, did not adopt this report; nor did it adopt the Committee's recommendations regarding on-site storage. *See* J.A. 410–14.

[31] In *Joseph E. Seagram & Sons, Inc. v. Hostetter,* 384 U.S. 35 (1966), this Court ruled that, although the New York Alcoholic Beverage Control Law might regulate in an area preempted by federal antitrust laws, the New York law could not be held invalid on its face—in part because a provision in the statute granted the administrative agency ample discretion that could be exercised to avoid preemption. The Court stated:

> "We cannot presume that the Authority will not exercise that discretion to alleviate any friction that might result should the ABC Law chafe against the Robinson-Patman Act or any other federal statute." *Id.* at 46.

Not only does the storage law leave "discretion" for the Energy Commission to avoid conflict with federal law; Section 25525 *requires* the Commission to do so.

[32] "State courts, when given the opportunity by the presentation . . . of an actual case or controversy, may, and often do, construe state statutes so that in their application they are not open to [supremacy clause] objections. . . ." *Alabama State Fed'n of Labor v. McAdory,* 325

The Solicitor General argues that ripeness is established because petitioners' challenges present "purely legal issues" regarding the Energy Commission's authority even to consider the adequacy of plans for spent fuel storage. S.G.Br. at 6. Yet, in *Toilet Goods Association v. Gardner,* 387 U.S. 158, 163–64 (1967), this Court confronted a purely legal question concerning the authority of another administrative agency, but held that judicial review was inappropriate pending actual application of the challenged regulation, which would further illuminate its justification. In this case, too, actual exercise of the Commission's spent fuel storage review authority in a concrete factual setting is essential to clarify how the Commission would interpret the challenged requirement; whether the Commission will impose any spent fuel storage requirements more exacting than the NRC's requirements; and, if so, what justification will be offered for any such requirement imposed. Resolution of these issues is inextricably related to the underlying merits of petitioners' preemption claim.

Because the provision has never been applied, the Solicitor General can only speculate as to the State's justification for the spent fuel storage provision in the abstract—and this speculation forms a major part of his preemption analysis. *See* S.G.Br. at 29–30, 39. Where, as here, delicate issues of federalism are implicated, this Court should decline to indulge such speculation and should instead defer decision until a concrete factual controversy is presented.

C. *The Hypothesized Conflicts Between the Waste Disposal Law and NRC Action Are Likewise Unripe for Judicial Assessment.*

The Ninth Circuit held that the waste disposal law was ripe for review principally because—in contrast to the storage law—it imposes a moratorium on the certification of new

---

U.S. 450, 470–71 (1945). Although "California has not concentrated challenges to the Warren-Alquist Act in any *specialized* state court" (A. 27, emphasis added), neither petitioners nor their *amici* explain why the Warren-Alquist Act's provision for direct review in the State Supreme Court (§ 25531) does not, contrary to the rulings of the courts below, suggest that the district court should have abstained under *Railroad Comm'n v. Pullman Co.,* 312 U.S. 496, 500 (1941), and *Burford v. Sun Oil Co.,* 319 U.S. 315, 318 (1943).

nuclear plants until the findings required in the provision can be made. A. 25–26. The court recognized that the provision "does not have any immediate impact on the utilities." A. 26.[33] Nevertheless, because the utilities had argued that there was a blanket preemption in the Atomic Energy Act which "gives the NRC sole authority to regulate, *for all purposes,* the construction and operation of nuclear plants" (A. 31, emphasis added), the Ninth Circuit perceived the issue before it as "a purely legal one." A. 26. Considering all these factors together, it held the challenge to the waste disposal law ripe for adjudication.

Yet the Ninth Circuit's own reading of Sections 271 and 274(k) of the Atomic Energy Act, which expressly preserve state authority over nuclear plants (as discussed *infra* at 25–31, 41–47), provides a complete answer to any such claim of blanket preemption. Indeed, petitioners and some of their *amici* appear to recognize as much in their briefs in this Court because they now make repeated reference to particular federal regulatory actions of the NRC which purportedly demonstrate that the waste disposal law conflicts in some more precise sense with federal law. Pet.Br. at 5–6, 41–44; S.G.Br. at 18–21.[34] But the only "actions" the NRC has taken are: (1) its failure, thus far, to order any nationwide halt in federal licensing of nuclear facilities for safety reasons pending approval and implementation of a nuclear waste disposal method; and (2) its commencement of a proceeding to reassess the evidentiary basis for the NRC's supposed "confidence" that safety considerations will not be compromised by continued federal licensing while a waste disposal method is

---

[33] The statute requires the Commission to continue to process the notices and applications for any proposed plant (*see* § 2552a.2(d)); the statutory findings are not required to be considered by the Commission until the second phase of licensing, "certification," is requested for a plant (*id.*); and the court noted that "the utilities concede that their proposed plants are many years from being eligible for certification." A. 26. Given that the Energy Commission staff's latest forecast for the next two decades shows no need for additional nuclear power plants (*see* note 15 *supra*), it is entirely conceivable that the findings can be made when, if ever, certification of a plant is finally requested.

[34] *See* discussion *supra* at 10–13.

being developed. Neither of *these* actions, surely, provides a ripe basis for determining that a state decision to halt state licensing of nuclear facilities *now* conflicts with federal law.

First, the NRC has not even completed its own "waste confidence" proceeding and therefore has not finally determined whether nuclear plants may continue to be licensed even at the *federal* level, from a safety perspective, prior to resolution of the waste disposal problem.[35] Both the utilities and the Solicitor General apparently believe that the result of that proceeding will be a determination that such licensing may continue. But the fact remains that the anticipated federal decision has not been issued.

Second, even assuming that the NRC had already *made* a final decision that reactors could continue to be licensed at the federal level with confidence that a waste disposal solution will be *safely* implemented in the next two or three decades, that decision would hardly represent a federal judgment that such reactors would be a *reasonable investment.* There remains a risk that, despite its supposed confidence, the NRC may later have to order reactor shutdowns in order to protect the public health and safety. Thus, the question whether any part of the Atomic Energy Act would authorize NRC action to *compel* states to *disregard* this risk will not be ripely posed unless and until the NRC has formally *taken* so drastic an action.[36]

Petitioners also attempt in this Court to buttress their claim by repeated references to certain conclusions in the Nuclear Fuel Cycle Committee's draft report (Pet. Br. at 12 n.20, 18, 43, 45) referred to *supra* at 19–20, and to the Energy Commission staff's initial rejection of an application by PG&E for a license for the Stanislaus power plant, because of insufficient information (*id.* at 10, 11, 39, 40, 48). These matters are offered as "circumstantial evidence" of an inchoate intent by

---

[35] *See* discussion *supra* at 11–12.

[36] Under these circumstances, it is plainly premature to ask whether a conflict would exist if the NRC or Congress were to declare that the long-term waste disposal problem has been solved—something neither has said—and if California, despite that declaration and Section 25525, were then to reject the federal "finding."

the Energy Commission to regulate for purposes of preventing the very radiological hazards that the NRC regulates. But this Court granted *certiorari* to review the *laws* California enacted—not the *intentions* some California officials may or may not harbor. Moreover, as discussed *supra* at 19-20, petitioners' purported reliance on a draft committee report, which has never even been adopted as the official position of the agency, can present no ripe controversy. Nor can petitioner PG&E's dispute with the Commission's staff over the contents of the initial application filed for the Stanislaus project serve as evidence of how the Commission's members would apply the statute to any project of petitioners. *See FTC v. Standard Oil Co.*, 449 U.S. 232, 239–43 (1980) (issuance of administrative complaint by FTC served only to initiate proceedings; judicial review must await definitive statement of Commission's position on issues raised in the complaint).[37]

Thus petitioners' claims do not present any controversy which is ripe for this Court's review. With respect to both provisions challenged here, those claims are bottomed on draft reports and preliminary actions of the Energy Commission and on petitioners' own speculations about the future outcome of NRC proceedings. The abstract issues of federalism which they seek to have this Court resolve are far too important to be decided apart from the concrete factual setting which this Court has demanded as the predicate for such review.

---

[37] Petitioners never controverted the testimony of the staff members involved that the staff did not seek this information for purposes of regulating radiation hazards but, rather, for purposes of judging the economics and reliability of the plant. *See* Simon excerpts [Def't Direct Testimony at Trial] at 101 [R.112]. In fact, in the one siting proceeding involving a nuclear power plant which members of the Commission *have* decided, the Commission *approved* the initial license for the Sundesert nuclear project. Varanini Dec. ¶¶ 6–7 [R.86]. None of the conditions in the approval sets a radiological hazard standard or imposes any design or construction requirement. In *DeCanas v. Bica*, 424 U.S. 351, 363–65 (1976), the Court refused to determine whether a state statute was preempted *as applied*, because state administrative action in construing the statute could still save it from conflict with federal law.

II. THE ATOMIC ENERGY ACT LEAVES EACH STATE FREE TO DECIDE FOR ITSELF HOW BEST TO MEET ITS OWN ELECTRICAL ENERGY NEEDS AND THUS TO MAKE PRECISELY THE KINDS OF CHOICES WHICH CALIFORNIA HAS MADE.

There is no congressional objective to promote nuclear power that overrides a state's authority to determine for itself —wisely or not—whether nuclear technologies are reliable enough to justify an expanded role in the state's portfolio of electrical energy resources. Nor was the Atomic Energy Act intended to restrict the traditional authority of a state over the resource planning of its own chartered utilities simply because those utilities may desire to build plants which use uranium as a fuel. Thus, the provisions of California law challenged here are simply part of the State's traditional authority, which Congress intended to leave intact.

A. *Nothing in the Atomic Energy Act Restricts the Substantive Criteria by Which a State May Choose the Mix of Nuclear and Non-Nuclear Energy Technologies on Which it Will Rely.*

1. *The Act expressly preserves such traditional state authority.*

Laws regulating electric utilities, such as those challenged here, merit special deference since they represent vital exercises of a state's traditional power to protect the public welfare, and may therefore be deemed preempted only if "that was the *clear and manifest* purpose of Congress." *Rice v. Santa Fe Elevator Corp.*, 331 U.S. 218, 230 (1947) (emphasis added). Yet petitioners assert at the threshold of their argument that this presumption should be turned on its head because nuclear power "began as a federal government monopoly" under the 1946 Atomic Energy Act. Pet.Br. at 20.

This assertion is incorrect. There was no "federal government monoply" over nuclear power in 1946 for the simple reason that *there was no nuclear power in 1946.* The federal monopoly concerned only the possession of fissionable materials.[38] The first prototype of a nuclear

[38] The Atomic Energy Act of 1946 was designed primarily to preserve America's monopoly over atomic weapons; national security concerns dictated that the ownership, possession, and use of fissionable materials should be vested exclusively in the federal government, through the auspices of the newly-created Atomic Energy Commission. S. Rep. No. 1211, 79th Cong., 2d Sess. 14–15 (1946). At that time, reactor technology

power plant did not begin operation until 1957,[39] three years after Congress had relinquished the federal monopoly over nuclear materials in the 1954 Act.[40]

The Solicitor General is equally incorrect in asserting that Congress, in passing the Atomic Energy Act of 1954, accepted Senator Humphrey's suggestion that nuclear power be treated as a "*federal resource* much like the nation's water power resources." S.G.Br. at 4 (emphasis added). In fact, Congress rejected Senator Humphrey's notion that atomic energy was a federal resource.[41]

---

was so primitive that the commercial use of nuclear power was viewed as "a very distant goal." S. Rep. No. 1699, 83d Cong., 2d Sess. 3 (1954).

[39] I. Bupp & J. Derian, *Light Water* 5 (1978).

[40] However, even the 1954 Act was not considered by Congress to be "an atomic power bill." As the Chairman of the Joint Committee on Atomic Energy, Representative Cole, stated:

> "The legislation now before the Joint Committee is not an atomic power bill. . . . It does not deal with the problem of how such an industry will be woven into the fabric of American economic life. The legislation now under study by our Committee does not address itself to such questions for a very simple reason—an atomic power industry does not exist today and it will not exist for many years to come. . . . It is concerned—not with the theoretical question of how to regulate a non-existent atomic power industry—but with the practical question of devising ways and means of bringing such an industry into being at the earliest possible date." JCAE Press Release, June 24, 1954, Remarks at Luncheon Meeting of Int'l Congress on Nuclear Engineering, at 3–4.

[41] Thus, Senator Hickenlooper, Vice-Chairman of the Joint Committee, emphatically stated that "atomic energy is not a Federal resource, any more than gold is a Federal resource." 100 Cong. Rec. 12200 (1954). In responding to Senator Humphrey's amendment to subject nuclear reactors to the same pervasive authority which the Federal Power Commission (now the Federal Energy Regulatory Commission) exercises over hydroelectric projects, Senator Hickenlooper also stated that "we will have to resist this amendment as vigorously as we can" precisely to avoid federal usurpation of "the sovereignty of the State and local regulatory bodies." *Id.* at 12015. Therefore, Congress granted the FPC only the limited authority to regulate *the transmission in interstate commerce* of electricity produced by nuclear power—the same narrow authority which the FPC possesses over all other electricity, regardless of sources. 42 U.S.C. § 2019 (1976); *see* 100 Cong. Rec. 12196–202 (1954) (Humphrey-Hickenlooper debate); *compare* 16 U.S.C. §§ 791a–823 (regulation of development of water power and resources), with *id.* at §§ 824–824k (regulation of electric utility companies in interstate commerce). The Solicitor General's reliance on *First Iowa Hydro-Elec. Cooperative v. FPC*, 328 U.S. 152 (1946), is thus clearly misplaced. S.G.Br. at 35–36. *First Iowa* analyzed the FPC's pervasive authority over federal

Instead, Congress gave the AEC the important but carefully delimited role of regulating radiation hazards (as discussed *infra* at 41–47), and specifically rejected suggestions that the AEC be given a broader role. For example, the House rejected a proposal that the AEC should itself "undertake . . . the production and distribution of electrical power utilizing atomic energy." 100 Cong.Rec. 11688–89 (1954).

While possession of atomic materials had been a federal monopoly at the time of the 1954 Act, the regulation of intrastate electrical generation and transmission had long been the exclusive domain of state and municipal governments. Historically, states have made decisions about meeting their electric power needs by issuing or denying certificates of public convenience and necessity to private or publicly-owned utilities wishing to construct electrical generating facilities.[42] State regulatory bodies have thus traditionally addressed not only the need for power, the reasonableness of proposed rates, and the adequacy of service, but also the comparative cost, reliability, and efficiency of various proposed *sources* of needed electric power.[43]

---

hydroelectric projects, not its far more restricted authority over interstate transmission of electricity. Moreover, the Court's holding that the promotional objectives of the Federal Power Act would be frustrated by state prohibition of a *federal* hydro-electric project is in no way inconsistent with state authority to reject *private* nuclear power projects. *Cf.* note 44 *infra*. This conclusion is reinforced by comparing the Federal Power Act's narrow savings provision for state hydropower regulation, preserving only laws affecting water rights (*see* 16 U.S.C. § 821; 328 U.S. at 175–76), with the broader non-preemption clauses of the Atomic Energy Act, §§ 271 and 274(k), 42 U.S.C. §§ 2018, 2021(k).

[42] *See generally* Jones, *Origins of the Certificate of Public Convenience and Necessity: Developments in the States, 1870–1920*, 79 Colum. L. Rev. 426 (1979). As early as 1920, many states had adopted legislation empowering utility commissions to regulate electric utilities. *See id.* at 454–55. Today, "[e]very State has a State regulatory body charged with assuring safe and adequate electric service at reasonable rates." Congressional Research Service, *Report on the Electric Utility Sector: Concepts, Practices and Problems* 12 (Subcomm. Print 1977); *see generally* American Bar Association, *The Need for Power and the Choice of Technologies: State Decisions on Electric Power Facilities* (1981) (a report prepared for DOE, describing the regulatory framework now in effect in all fifty states).

[43] Many statutes authorizing state public utility commissions to consider these factors, prior to granting a certificate of public convenience and necessity for new construction, were in force in 1954 when Congress recognized existing state authority. *See, e.g.*, 1915 Ala. Acts No. 746 § 4

In the 1954 Act, Congress expressed in no uncertain terms its intent to preserve the full spectrum of this kind of state authority. Section 271 of the Act provided:

> "Nothing in this [Act] shall be construed to affect the authority or regulations of any Federal, State, or local agency with respect to the generation, sale, or transmission of electric power produced through the use of nuclear facilities licensed by the Commission." 42 U.S.C. § 2018.

This provision was clearly designed to preserve the states' plenary authority over electric power, in the case of nuclear power generation as with other sources.[44] As later stated by Senator Hickenlooper in the context of a proposed amendment to Section 271, "[o]ur intent was to make it absolutely

---

at 867; 1920 Ala. Acts No. 37, §§ 23–24, 49, at 48, 53; 1941 N.M. Laws ch. 84, Preamble §§ 17, 46 at 126–27, 132, 140–41; 1931 N.C. Sess. Laws ch. 455, at 766–67; 1932 S.C. Acts No. 871, §§ 2 (w), 4(a)&(b), at 1505–07, 1510; 1931 Wis. Laws ch. 183 § 3, ch. 475, § 7 at 315–17, 810. For example, in 1917 the California Railroad Commission (predecessor of the Public Utilities Commission) denied an application to construct a natural gas pipeline in an area then served by artificial gas, noting its concern that the failure of this "new and comparatively expensive enterprise" would mean that "the immediate requirements of present and prospective customers" could not be met. *In re Central California Gas Co.*, 13 Calif. R.R. Comm'n Decisions 508, 510 (1917). California's plenary constitutional authority to regulate public utilities to promote efficient and reliable service was also used to forbid "the construction of an inferior [gas] plant of second hand material." *In re C.S.S. Forney*, 1916C Pub. Utilities Rep. 786, 788 (Cal. R.R. Comm'n. 1916).

[44] *See, e.g.*, S.Rep. No. 390, 89th Cong., 1st Sess. 4, 9–10 (1965); Proposed Amendment to Section 271 of the Atomic Energy Act of 1954: Hearings Before the Subcomm. on Legislation of the Joint Comm. on Atomic Energy, 89th Cong., 1st Sess. 4, 174–75 (1965) (AEC's position); 100 Cong. Rec. 12015, 12196–202 (1954) (remarks of Sen. Hickenlooper); *id.* at 10559 (statement of Chairman Strauss of the AEC). Section 271 was supplemented in 1965 to overturn a holding that the Atomic Energy Act authorized the states to regulate the activities of the AEC itself. *See Maun v. United States*, 347 F.2d 970, 975–78 (9th Cir. 1965). The amendment, which provides that Section 271 "shall not be deemed to confer upon any Federal, State, or local agency any authority to regulate, control, or restrict any activities *of the Commission*" (42 U.S.C. § 2018(b), emphasis added), is *the only limitation* which Congress has placed on the reservation of state authority in Section 271. The existence of that narrow and precise limitation—clearly inapplicable here—shows that Congress has acted expressly rather than by implication when it has wished to restrict the broad sphere of state authority affirmed by Section 271.

clear that the Atomic Energy Act's special provisions on licensing of reactors did not disturb the status quo with respect to the then existing authority of Federal, State, and local bodies to regulate generation, sale, or transmission of electric power." [45] The courts *and the NRC itself* have recognized that Section 271 is "a garden-variety nonpreemption clause" —"a statement that the [AEC] will not preempt existing authority in the areas mentioned." *Public Service Co. v. NRC,* 582 F.2d 77, 84 (1st Cir.), *cert. denied,* 439 U.S. 1046 (1978).[46]

That Congress intended to preserve this traditional sphere of state authority is further demonstrated by the narrow scope of the regulatory authority granted the AEC (now NRC) under the 1954 Act. From the outset, its jurisdiction has been limited to protection against radiation hazards, and an amendment to the Act in 1959, discussed *infra* at 43, expressly preserved "the authority of any state or local agency to regulate activities [of NRC licensees] for purposes other than protection against radiation hazards." 42 U.S.C. § 2021(k). The NRC's radiological protection mission simply does not encompass policies intended to render nuclear plants the most dependable or inexpensive choice for meeting a state's responsibility to provide for its citizens' electrical energy needs. Petitioners' efforts to prevent the states from considering issues bearing significantly on the cost, reliability, and feasibility of generating electricity with nuclear fuels would thus leave *no regulatory agency at all with authority to consider these and other important non-radiological issues.* Congress certainly did not intend to create a regulatory vacuum by usurping this traditional state authority, and the courts and the agency itself consistently have so held.[47]

---

[45] 1965 Hearings, *supra* note 44, at 52.

[46] *See Detroit Edison Co. v. NRC,* 630 F.2d 450, 453 (6th Cir. 1980); *Phipps Bend Nuclear Plant, Units 1 and 2,* [1975–1978 Transfer Binder] Nuclear Reg. Rep. (CCH) ¶ 30,342, at 28,803–05 (1978) (NRC Licensing Appeal Board decision).

[47] *See, e.g., Marshall v. Consumers Power Co.,* 65 Mich App. 237, 237 N.W.2d 266, 282 (1975); *Midland Plant, Units 1 and 2,* [1975–1978 Transfer Binder] Nuclear Reg. Rep. (CCH) ¶30,271, at 28,434–35 (1978) (NRC Licensing Appeal Board decision) ("In the Atomic Energy Act, Congress did not make this agency responsible for assessing whether a proposed nuclear plant would be the most financially advantageous way for a utility to satisfy its customers' need for power. Such matters remained the province of the utility and its supervising state regulatory commission").

Petitioners and their *amici* attempt to rewrite Section 271 in order to restrict the state authority preserved by that section. Thus, they argue that Section 271 addresses only the state's authority to regulate electricity *"after"* it is produced (Pet.Br. at 32; S.G.Br. at 11). However, the statutory language unqualifiedly preserves state authority over the "generation," as well as the "sale or transmission," of electricity.[48] Similarly, the Solicitor General's creative attempt to limit state authority over electrical generation to such issues as "rates and services," which he says do not implicate "the special character of nuclear energy" (S.G.Br. at 10–11), lacks any support whatever in the language, history or purposes of the Act.[49] It may be *precisely* the unique aspects of a given energy source, after all, which render it unacceptably expensive or unreliable in a particular context. The broad language of Section 271, preserving not only existing "regulations" but also state "authority," is wholly inconsistent with a congres-

---

[48] The legislative history, too, leaves no doubt that Congress intended to preserve the states' authority over the generation of electrical energy. *See, e.g.*, 100 Cong. Rec. 11689 (1954) (exchange between Rep. Cole and Rep. Yates to the effect that states retain authority to issue or deny certificates of public convenience to proposed plants); *id.* at 12198 (remarks of Sen. Hickenlooper). The Solicitor General relies on isolated statements of Senator Hickenlooper which emphasize the effect of Section 271 on the regulation of the *transmission* of electricity. Since these comments were made in the context of Senator Hickenlooper's debate with Senator Humphrey over the FPC's authority over interstate transmission of electricity, *see* 100 Cong. Rec. 12196–202 (1954), discussed in note 41 *supra*, it is understandable that Hickenlooper did not repeat the statutory language, "generation, sale, or transmission," each time. The Solicitor General also cites remarks of Chairman Strauss of the AEC, *see* note 44 *supra*, but Strauss does not assert that states lack authority over the "generation" of nuclear power. In short, this argument not only disregards the explicit statutory language, but is based entirely on untenable negative inferences.

[49] Even the conceded jurisdiction of states over "rates and services" would, it seems plain, include authority to determine whether facilities proposed for providing those "services" were sufficiently reliable. Moreover, as the NRC's General Counsel concluded in an official report to the NRC, even a state's entirely uncontroversial control over electrical rates creates a situation under current law in which "a State may, in effect, veto any nuclear power plant." NRC, *Information Report* (SECY-80-220) at 2 (April 29, 1980).

sional intent to impose on the states the straightjacket that petitioners and their *amici* invite this Court to fashion.

2. *There is no generic pro-nuclear mandate in the Act which limits the states in their exercise of this traditional authority.*

To overcome Section 271's express reservation of state authority over electricity generation by nuclear facilities, petitioners and their *amici* are reduced to arguing that a congressional preference for nuclear over non-nuclear power can be inferred from general statements of policy in the preamble of the Act—declaring Congress' desire to encourage nuclear research and development so that the new technology can be demonstrated and exploited.[50] They assert that the Ninth Circuit erred when it concluded that such statements did not reflect a preemptive congressional objective regarding the development of nuclear power. Pet.Br. at 35–36; S.G.Br. at 32 n.32.

This Court recently refused to infer a preemptive congressional objective from such "general statements" encouraging the use of a particular energy source. *Commonwealth Edison Co. v. Montana,* 453 U.S. 609, 633 (1981). There, the Court held that these general statements in several federal statutes,

---

[50] *See* Pet.Br. at 33–37; S.G.Br. at 31–34. The Solicitor General also quotes language in a similar vein from legislative reports which reflect the optimism of the early 1950's about the promise of nuclear power. S.G.Br. at 31–32. While petitioners and the Solicitor General agree with the Ninth Circuit that such statements do not reflect "an intent to promote nuclear power at all costs" (A. 42; *see* Pet.Br. at 34; S.G.Br. at 35), they are unable to offer any guidance as to *which* "costs" might provide sufficient justification, under their expansive theory of preemption, for a state's refusal to rely on further increments of nuclear power generation.

Petitioners and their *amici* also assert that Congress' passage and extensions of the Price-Anderson Act, which limits liability in the case of a nuclear accident, evidences Congress' intent to encourage the development and commercial use of nuclear energy. Pet.Br. at 34 n.35; S.G. Br.at 32 n.32. But the fact that Congress has chosen to limit traditional tort liability for nuclear accidents clearly does not warrant the inference that Congress intended to preempt any state regulation of nuclear power beyond that limited subject. On the contrary, the Price-Anderson Act illustrates Congress' recognition that, absent express displacement of state rules that might discourage nuclear power plants, such rules are *not* preempted.

although reflecting Congress' desire to "encourage the use of coal," do *not* "demonstrate a congressional intent to preempt all state legislation that may have an adverse impact on the use of coal." *Id.*[51] Such an intent could be inferred, in this Court's view, only when it was "unmistakably clear." *Id.*[52] Similarly, although Congress sought in the Atomic Energy Act to "encourage widespread participation in the development and utilization of atomic energy" (42 U.S.C. § 2013(d)), this policy does not manifest any congressional intent—much less one that is "unmistakably clear"—to preempt state laws which adversely affect the use of nuclear power.[53]

---

[51] To establish a national mandate encouraging coal use, the utility-petitioners there relied on general policy statements of the same character as those invoked in this case. *Compare* Energy Policy and Conservation Act, 42 U.S.C. §§ 6201, 6201(6) (1976 and Supp. IV 1980), and Powerplant and Industrial Fuel Use Act ("PIFUA") § 102(b), Pub.L. No. 95-620, 92 Stat. 3289 (1978) *with* Atomic Energy Act, 42 U.S.C. §§ 2011, 2013. In fact, petitioners here rely on *this same provision of PIFUA* as purported demonstration of a preemptive congressional objective to promote nuclear power. Pet.Br. at 34 n.35, S.G.Br. at 32 n.32.

[52] Understandably, in an era when state and federal laws frequently overlap, courts have been reluctant to grant such preemptive effect even to a congressional objective which is unmistakably expressed and of paramount importance. In *Exxon Corp. v. Governor of Md.*, 437 U.S. 117, 133 (1978), for example, this Court found a "conflict" between a state statute and "the central policy of the Sherman Act—our 'charter of economic liberty.'" Nevertheless, the Court sustained the state law because, "if an adverse effect on competition were, in and of itself, enough to render a state statute invalid, the States' power to engage in economic regulation would be effectively destroyed." *Id.* at 133. Similarly, if the supposed congressional objective to promote the commercial deployment of nuclear power were given the preemptive effect urged by petitioners and their *amici*, the authority of the states to engage in electrical energy regulation would be effectively destroyed.

[53] Indeed, over the years Congress has blessed many alternative energy sources with the same kind of "encouragement" and hope for "widespread utilization." *See, e.g.*, Department of Energy Organization Act, 42 U.S.C. §§ 7111, 7112 (Supp. IV 1980) (recycling and other technologies utilizing renewable energy resources); Federal Photovoltaic Utilization Act, 42 U.S.C. §§ 8217, 8273 (1976 & Supp. IV 1980) (photovoltaic solar electric systems); Energy Security Act of 1980, Pub.L. No. 96-294, 94 Stat. 611 (comprehensive programs for the development of synthetic fuels, energy from biomass, solar energy and energy conservation, and geothermal energy). Congress has also repeatedly stressed that primary emphasis should be given to energy conservation. *See, e.g.*, National Energy Conservation Policy Act, 42 U.S.C. §§ 8211, 8251(2) (Supp. IV 1980). To grant preemptive effect to each of these general pronouncements would preclude any state role in the regulation of electrical ener-

As the legislative history plainly indicates, the Act was designed to promote "the technological development of atomic power," *not* to set forth "a national policy for an atomic power industry." [54] Nor was Congress prejudging the commercial practicability of generating electricity from nuclear power, or precluding a state determination to the contrary.[55] The inclusion of Section 271 in the Atomic Energy Act, expressly *preserving* state authority over nuclear power generation, completely undermines any argument that the Act reflects an "unmistakably clear" intent to *override* such state determinations.

In a variety of enactments subsequent to the Atomic Energy Act of 1954, which are reviewed in the Ninth Circuit's opinion, Congress has in fact repeatedly emphasized that there is no national preference for nuclear power over other alternatives. A. 43–45. For example, in the Energy Reorganization Act of 1974, 42 U.S.C. §§ 5801–5891, Congress transferred the non-regulatory functions of the AEC to a new agency, the Energy Research and Development Administration ("ERDA"), with the expectation that ERDA would "place greater relative emphasis" on non-nuclear energy in the future.[56] This policy was reinforced by the Nonnuclear

---

gy. Indeed, in the one instance where Congress has dictated state consideration of particular energy policies, it was *not* nuclear energy but energy conservation which Congress sought to promote. *See* Public Utility Regulatory Policies Act, 16 U.S.C. §§ 2601 *et seq.* (1976 & Supp. IV 1980).

[54] 100 Cong. Rec. 11661 (1954) (remarks of Rep. Durham); *see also id.* at 10552–53 (remarks of Sen. Pastore), 11688 (remarks of Rep. Cole, Chairman of the Joint Committee and co-sponsor of the 1954 Act); *see also* note 40 *supra.*

[55] Although Congress wished to accelerate the development of economical atomic power (S.Rep. No. 1699, 83rd Cong., 2d Sess. 9 (1954)), it was uncertain about when, if ever, electricity produced from atomic power would become competitive with electricity produced from other fuels. *See, e.g.,* 100 Cong. Rec. 10553 (1954) (remarks of Sen. Pastore); *id.* at 11655 (remarks of Rep. Cole).

[56] S.Rep. No. 980, 93rd Cong., 2d Sess., *reprinted in* 1974 U.S. Code Cong. & Ad. News 5470, 5489. The Senate's bill included language prohibiting ERDA from "giving unwarranted priority to any single energy source" because of the concern that ERDA, as the successor to much of the personnel, facilities and funding from the AEC, "may give an unwarranted priority to development of nuclear power to the detriment of competing energy technologies." *Id.* The bill also included "organiza-

Energy Research and Development Act of 1974, 42 U.S.C. §§ 5901 *et seq.*, which directed ERDA to develop "a comprehensive nonnuclear energy research, development, and demonstration program." *Id.* § 5903. These same policies were carried forward in the Department of Energy Organization Act, 42 U.S.C. §§ 7101 *et seq.*, when DOE succeeded to all of the functions of ERDA.

The Ninth Circuit also emphasized Congress' specific authorization of more restrictive state regulation of nuclear power in the Clean Air Act Amendments of 1977, 42 U.S.C. § 7422. A. 44–45. That Act explicitly allows the states to "adopt and enforce more stringent standards than the Federal emission or ambient air standards" for radioactive pollutants, and in that respect specifically overrules the decision in *Northern States Power Co. v. Minnesota*, 447 F.2d 1143 (8th Cir. 1971), *aff'd mem.*, 405 U.S. 1035 (1972).[37] Congress thus clearly rejected the Eighth Circuit's assumption in *Northern States*—which the Solicitor General continues to embrace—that the states could be permitted to take no action which would "stultify the . . . development and use of atomic energy for

---

tional safeguards elsewhere in the Act to prevent a pro-nuclear bias in ERDA." *Id.* The Solicitor General correctly notes that the Senate's language was restated in the final legislation in positive terms, so that all technologies were to be promoted. S.G.Br. at 33 n.32; *see* Conf. Rep. No. 1445, 93d Cong., 2d Sess., *reprinted in* 1974 U.S. Code Cong. & Ad. News 5539. However, the Conference Committee Report does not disavow the Senate's stated expectation that nuclear energy be deemphasized; it left intact the "organizational safeguards" to ensure this deemphasis; and it does not support the Solicitor General's assertion that the conference committee bill "eliminated the anti-nuclear bias of the bill." S.G.Br. at 33 n.32. His sole support for this proposition is an article whose research was financed by the nuclear industry's trade association, the Atomic Industrial Forum. Murphy & LaPierre, *Nuclear 'Moratorium' Legislation in the States and The Supremacy Clause: A Case of Express Preemption*, 76 Colum. L.Rev. 392 n.* (1976).

[37] H.R. Rep. No. 564, 95th Cong., 1st Sess. 141, *reprinted in* 1977 U.S. Code Cong. & Ad. News 1121; *see also* 1977 U.S. Code Cong. & Ad. News at 2653–54. The Solicitor General states that "an effort to overrule *Northern States* . . . generally was defeated on the floor of the House" *in 1973*. S.G.Br. at 34 n.32. However, as the Ninth Circuit noted, that effort was successful *in 1977* "in the specific context of regulation of radioactive air pollutants" (A. 44 n.38)—the very subject matter of *Northern States*.

the production of electric power." 447 F.2d at 1154.[58]

The point is not that Congress in these recent laws "expressly authorized" what California has done (*see* S.G.Br. at 34 n.32); the point is only that, if Congress had adhered to the kind of nuclear boosterism attributed to it by the Solicitor General, it would not have authorized, let alone encouraged, state regulation that could readily oust nuclear power plants from states that do not welcome them.[59] It follows that Congress has imposed no pro-nuclear mandate upon the states. Even if California could properly be accused of somehow "discriminating" against nuclear power—which it most emphatically cannot (*see supra* pp. 6–8 & nn. 9–15)—no offense to federal law could be discerned in such a stance.

B. *Nor Does the Atomic Energy Act Purport to Compel States to Leave the Choice Among Energy Technologies to Whoever "Owns" the Facilities for Generating Electricity, Free of Generic Review by Statewide Agencies.*

---

[58] The NRC itself recognized as much when it acknowledged that the 1977 Clean Air Act amendments permit states to preclude the construction of new power reactors and even "to prevent or halt the operation of an already built nuclear plant," and that such action "could be [taken] without conflicting with federal law." *Consolidated Edison Co. of New York, Inc. (Indian Point Station, Unit No. 2)* [1975–1978 Transfer Binder] Nuclear Reg.Rep. (CCH) ¶ 30,265, at 28,411 & n.13 (NRC Licensing Appeal Board decision). This NRC decision directly contradicts the Solicitor General's assertion that "[t]he fact that the states have some authority to regulate in the context of air pollution does not entail the conclusion that the states . . . can prohibit construction of nuclear power plants altogether." S.G.Br. at 33–34 n.32. Similarly, Congress has recently reaffirmed the right of states to establish land use, demographic and siting requirements which are *more stringent* than the NRC's. NRC Authorization Act for Fiscal Year 1980, Pub.L. No. 295, 94 Stat. 780 § 108(f) (1980).

[59] Equally inconsistent with the Solicitor General's theory is the Pacific Northwest Electric Power Planning and Conservation Act of 1980, in which Congress set explicit priorities for the development of federally-financed electrical energy resources in a seven-state region, and ranked nuclear power in the least-preferred category, behind conservation and renewable energy resources, among others. 16 U.S.C. § 839b(e)(1); *see also* S.Rep. No. 272, 96th Cong., 1st Sess. 15–16 (1979) ("[C]onventional fueled generating resources, including coal and nuclear, [are] to be treated as the region's lowest priority resources"). Congress has not had occasion to set comparable priorities for resource development in other regions; the Northwest is unique nationally in its dependence on a branch of DOE, the Bonneville Power Administration, for meeting load growth in individual utility districts. *See id.* at 18.

Petitioners' theory of preemption would not only impose a pro-nuclear mandate on the states without any sanction in federal law, but would also entail a less obvious, but no less fundamental, restructuring of the relationship between a state and its own chartered utilities. For the challenged statutes regulate only *the choice of energy-producing technologies by utilities.* Because petitioners' theory would effect a federal intrusion into state affairs so grave as to raise the most far-reaching questions, it should be rejected absent the clearest statement of congressional intent—a statement entirely absent from the Atomic Energy Act.

The responsibility for choosing the mix of technologies that will most reliably and efficiently meet the energy needs of the citizens of a state may be vested in state planning officials or in a state's chartered utilities—or in a combination of both. In deciding how best to allocate this responsibility, a state discharges its most traditional governmental "role . . . 'as guardian and trustee for its people.'" *Heim v. McCall,* 239 U.S. 175, 191 (1915), *quoting Atkin v. Kansas,* 191 U.S. 207, 222 (1903). Not surprisingly, states have allocated this responsibility in a variety of ways. In some instances, state agencies have been granted authority to make the decisions to build and operate power plants themselves.[60] States have also delegated authority to municipalities to build and own such plants,[61] either individually or in combinations known as joint operating agencies.[62]

---

[60] For example, the California Department of Water Resources ("DWR") is authorized to construct and operate electric power generating facilities. California Water Code §§ 11295, 11575 (West 1971). DWR has used this authority to pursue hydroelectric generation, a coal-fired power plant, geothermal power and wind energy. *See* DWR, *The California State Water Project—Current Activities and Future Management Plans,* Bulletin 132-81, November 1981. *See also* N.Y. Pub. Auth. Law § 1005 (McKinney 1982) (the Power Authority of the State of New York).

[61] For example, approximately 30 percent of the electricity generation capacity of California utilities is owned by municipal utilities. California Energy Commission, *1977 California Energy Commission Biennial Report,* Vol. VII, Table 2. These publicly owned utilities are exclusively creatures of the State. Cal.Const. Art. XI, § 9 (West 1954 & Supp. 1981).

[62] One example of such an agency is the Washington Public Power Supply System. Wash. Rev. Code Ann. § 43.52.370 (West Supp. 1981). In California, at least two such agencies—the Northern California Power Agency and the Southern California Public Power Agency—exist by virtue of

Most states have chartered private utilities—such as the petitioners here—to construct and own such energy producing facilities. Any state taking this course must choose whether (1) to reserve for state officials the authority to prepare comprehensive plans for the selection and siting of energy generating resources, as California has done in the Warren-Alquist Act, (2) to review utility proposals on a plant-by-plant basis, or (3) to allow the decisions of private utilities to go virtually unregulated.[63]

However a state discharges its responsibility to ensure for its citizens a reliable supply of electricity, the Atomic Energy Act does not affect the ultimate prerogative *of the state itself* to choose the mix of energy supply technologies—coal, oil, nuclear, or other—best suited to its people's needs. Thus, the Act indisputably leaves states which build and operate all of their own facilities free to reject nuclear power and to build exclusively non-nuclear plants, if they wish to do so. And, at the other end of the spectrum, nothing in the Act requires private utilities to choose nuclear power[64] or compels states that leave private choice unfettered in this area to intervene to ensure some minimum level of nuclear development by private utilities.

---

joint powers agreements. Cal. Gov't Code §§ 6502, 6503.5, 6508 (West 1980). All such agencies have authority to decide which technology they will rely upon to satisfy the power needs of their members' service areas.

[63] Whatever precise form such regulation might take, it is clear that states have always possessed broad authority to review and control the "management decisions" of a utility in planning and building facilities which are intended to meet the utility's service responsibilities to the public. As the Court stated in *Jackson v. Metropolitan Edison Co.*, 419 U.S. 345, 357 (1974), "[t]he nature of governmental regulation of private utilities is such that a utility may frequently be required by the state regulatory scheme to obtain approval for practices a business regulated in less detail would be free to institute without any approval from a regulatory body." *See also Cantor v. Detroit Edison Co.*, 428 U.S. 579, 595–96 (1976).

[64] In fact, no utilities have chosen to order any nuclear power plants in this country since 1978. Atomic Industrial Form, *Historical Profile of U.S. Nuclear Power Development* (December 31, 1981). Moreover, of 13 reactors ordered between 1975 and 1978, 11 had been cancelled as of June 30, 1982 (Atomic Industrial Forum, *Electricity from Nuclear Power* (July 1, 1982)), and the NRC estimates that the remaining two will be cancelled or indefinitely deferred. Memorandum from William J. Dircks, Executive Director for Operations, NRC, to NRC Commissioner Ahearne, *February 19, 1982 Request for Data (March 8, 1982)*.

Yet petitioners ask this Court to hold that Congress nonetheless intended to restrict the state's authority to *make the very same technological choices* whenever the state—rather than taking over the utilities or allowing them free reign—chooses the intermediate path of exercising a supervisory function over its utilities, as in the Warren-Alquist Act. This astonishing result is implicit in petitioners' theory that some congressional objective or sphere of exclusive federal responsibility would be frustrated by a state's rejection of nuclear fuel for a utility's proposed power plant.

If private utilities are granted this kind of immunity from state regulation whenever they decide to fuel their plants with uranium rather than coal or oil, the state will be powerless to protect the interests of its citizens so long as it continues to allow private utilities to build power plants. If the utilities' choice of nuclear plants proved unwise—for any of the reasons underlying the challenged provisions, for example—the utilities' ratepayers, rather than their stockholders, would be asked to pay for the mistake.[65]

---

[65] The Solicitor General rather cavalierly suggests that the state's interests could be protected by shifting to the utilities' shareholders the financial risks of any such mistake (S.G.Br. at 39)—a proposal notably *missing* from the petitioner-utilities' brief. The suggestion would, of course, require state public utility commissions to revamp the certification procedures which they employ to determine whether facilities can be placed in the utilities' rate base. As such, it attests to the fundamental reordering of traditional state regulatory processes that would be effected by petitioners' theory. If public utility commissions did decide in advance that utilities' proposals to build nuclear power plants are made entirely at the shareholders' risk—as many states no doubt would, if they were otherwise deprived of supervisory authority—it seems hard to believe that any utility would ever build a nuclear power plant.

On the other hand, the Solicitor General concedes that states may consider the costs of waste disposal and the delays caused by necessary repairs in deciding whether or not to issue a certificate of public convenience and necessity to a proposed nuclear facility. S.G.Br. at 24, 26 n.26. Neither he nor petitioners deny that California could prevent any new nuclear power development by rejecting each utility proposal as it was submitted, on cost and reliability grounds. They fail to explain, however, why the Atomic Energy Act bars California from exercising this authority by statutory rule rather than by *ad hoc* administrative determinations. No principle of federal administrative law would preclude an agency, vested with broad discretionary power, from making cost or other determinations by rulemaking rather than case-by-case adjudication. *See, e.g., Mak v. INS*, 435 F.2d 728, 730 (2d Cir. 1970) (Friendly, C.

And it is the citizens of the State who would be left without an adequate or reliable source of electricity. Petitioners' theory would thus compel states that wish to reclaim their traditional authority over all forms of electrical energy effectively to "nationalize" their utilities in order to restore their own authority to decide which fuel to burn.

At the very least, an invasion of state sovereignty as sweeping and deep as that urged by petitioners could be tolerated only "after Congress ha[d] demonstrated its full awareness of what [was] at stake," through the most careful of deliberations and the clearest of statements. *United States v. Rumely,* 345 U.S. 41, 46 (1953).[66] But there is no discernible federal interest served by petitioners' theory, much less any expressed congressional objective it would advance.

The federal statute which was upheld in *Federal Energy Regulatory Commission v. Mississippi,* 102 S.Ct. 2126 (1982), against claims that it improperly invaded state sovereignty, provides a useful contrast to what petitioners seek here. Although the Public Utility Regulatory Policies Act of 1978 ("PURPA"), 16 U.S.C. §§ 2601 *et seq.* (Supp. IV 1980), was described as the first attempt by Congress to preempt the "important State function" of regulating electric and gas public utility companies (102 S.Ct. at 2144, Powell, J., concurring and dissenting), its intrusion into state authority seems modest when compared to the extravagant federal intervention into traditional state utility regulation that would be effected by petitioners' theory. Indeed, as the majority opinion in *FERC v. Mississippi* stressed, PURPA requires only that state

---

J.). Nor is there any reason why the legislature itself could not make a judgment about the excessive cost or inadequate reliability of nuclear power, rather than delegating this authority to an administrative agency. Nothing in the Atomic Energy Act purports to interfere with a state's allocation of regulatory authority over electricity generation between its legislature and its administrative agencies.

[66] Where such "grave constitutional questions" are raised, this Court has stated that legislation "would have to be far more explicit for us to assume that Congress made such a radical departure from our traditions." *Hannegan v. Esquire, Inc.,* 327 U.S. 146, 156 (1946). Only such "explicit action, especially in areas of doubtful constitutionality, [assures] careful and purposeful consideration by those responsible for enacting and implementing laws." *Greene v. McElroy,* 360 U.S. 474, 507 (1959).

administrative agencies "consider" certain energy measures, and do so in a manner broadly open to participation by affected individuals and groups. At the same time, PURPA "gives full force to the State's ultimate policy choices." *Id.* at 2140 n.29 (majority opinion).

Thus, in contrast to what petitioners seek here, Congress in PURPA did not direct states to adopt particular substantive criteria, to restructure state-utility relationships, or to disregard factors they could freely consider were they to replace private investors with public agencies as utility owners. Moreover, the language and legislative history of PURPA show extensive congressional deliberation about the law's impact on state authority and contain clear statements of Congress' intent to effect the particular intrusion into state decisionmaking at issue in that case. *See id.* at 2130–33. But the Atomic Energy Act, whatever else it does, surely contains *no* such clear statement of congressional intent to restructure either internal state-utility relations or the factors bearing on the state's choice between public regulation and public ownership,[67] and no indication of legislative attention to any such prospect.[68]

The California laws at issue in this case therefore represent a choice not preempted by the Atomic Energy Act. They reflect no more than the State's determination, given its al-

[67] To the contrary, the legislative history of the 1954 Act contains numerous statements indicating that Congress was not expressing any preference between the production of power by private or public entities. *See, e.g.,* 100 Cong. Rec. 11661 (1954) (remarks of Rep. Durham); *id.* at 10552–53 (remarks of Sen. Pastore).

[68] In addition, while the provisions of PURPA were obviously intended to enhance the participation of *local interests* in formulating and implementing ratemaking standards, which Congress deemed worthy of *local consideration* (*FERC v. Mississippi,* 102 S.Ct. at 2140 n.29 and sources cited therein), petitioners' theory of preemption would largely disenfranchise state and local governments and their citizenry of the ability to participate in making decisions at the local level regarding their reliance on nuclear power. Instead, as petitioners and their *amici* urge, such local interests would be remitted to participating as intervenors in NRC licensing proceedings. Pet.Br. at 5 n.9; Atomic Industrial Forum Br. at 9. This theory's impact on the structure of our federalism would thus be the diametric opposite of that entailed by the statute considered by this Court in *FERC v. Mississippi, supra.*

ready heavy commitment to nuclear power, to defer dependence on further increments of nuclear generation to the day when obstacles to the reliable operation of nuclear plants have been removed.

III. THE FACT THAT CALIFORNIA'S LAWS EXPRESSLY TAKE INTO ACCOUNT PROBLEMS OF NUCLEAR WASTE STORAGE AND DISPOSAL CREATES NO CONFLICT WITH THE NRC'S ROLE IN LICENSING NUCLEAR FACILITIES AND REGULATING RADIATION HAZARDS.

That California's laws take a form which expressly addresses matters of nuclear waste storage and disposal makes no difference to the conclusions reached above. The challenged state provisions do not purport or operate to regulate for radiation safety purposes. Nor do they undermine or interfere in any manner with the radiation-protection goals of the NRC. Accordingly, these laws are not preempted.

A. *Congress' Limited Grant of Radiation-Protection Responsibilities to the NRC Was Not Intended to Oust States of Jurisdiction Over Other Matters Relating to Nuclear Power Plants or Waste Storage and Disposal.*

The Ninth Circuit found no warrant for the argument—repeated by petitioners and their *amici* here—that Congress intended to grant the NRC exclusive authority, *for all purposes,* over "the construction and operation of nuclear power plants and the storage and disposal of spent fuel." S.G.Br. at 9; Pet.Br. at 38; *see* A. 32–33. The NRC has never claimed such plenary authority,[69] and the language of the 1954 Act expressly restricts the NRC's mission to the protection of public health and safety from radiation hazards.[70]

---

[69] Petitioners and the Solicitor General selectively quote NRC regulations to the effect that federal preemption of state regulation of the construction and operation of nuclear facilities was intended to be absolute. Pet.Br. at 28 n.31; S.G.Br. at 17, 28. But a fair reading of the regulations as a whole reveals that even the NRC interprets the scope of its preemptive authority to extend only to "radiological health and safety." 10 C.F.R. § 8.4(a), (i) (1982).

[70] *See, e.g.,* 42 U.S.C. §§ 2133(b), 2201(b), (i)(2) & (3), 2232(a). Thus, the courts have uniformly held that the AEC's responsibility in licensing nuclear power plants was confined to protection against radiation hazards. *See, e.g., New Hampshire v. AEC,* 406 F.2d 170, 174–75 (1st Cir.), *cert. denied,* 395 U.S. 962 (1969); *Cities of Statesville v. AEC,* 441 F.2d 962, 975–76 (D.C. Cir. 1969) (*en banc*); *Marshall v. Consumers Power Co.,* 65 Mich.App. 237, 237 N.W.2d 266, 277 (1975). *See also* legislative

When considered in this context, the phrases which petitioners have quoted above from Section 274(c) cannot support their argument.

Congress added Section 274 to the Act in 1959 in order "to recognize the need, and establish programs for, cooperation between the states and the Commission with respect to control of radiation hazards." § 274(a)(2), 42 U.S.C. § 2021(a)(2). Accordingly, Congress provided in Section 274(b) for the *delegation* to qualified states of the AEC's authority to regulate certain nuclear materials "for the protection of the public health and safety from radiation hazards." 42 U.S.C. § 2021(b). However, because of the technical complexity and national security implications of regulating the radiation hazards posed by nuclear power plants and waste disposal, the AEC was precluded from delegating its authority over these activities to the states. Section 274(c) requires the AEC to "*retain authority and responsibility* with respect to regulation of—(1) the construction and operation of [nuclear power plants; and] . . . (4) the disposal of [hazardous nuclear materials]." 42 U.S.C. § 2021(c) (emphasis added).

Section 274(c) is thus cast as an *exception* to the delegation procedure outlined in Section 274(b), and can only be read as requiring the AEC to "retain" its *existing* power to regulate *particular aspects* of the "construction and operation" of nuclear power plants—specifically, "the protection of the public health and safety from radiation hazards." 42 U.S.C. § 2021(b).[71] By its terms, Section 274(c) obviously did not

---

history cited in note 71 *infra*. Expansion of the NRC's mandate to environmental concerns beyond radiological hazards occurred only as a result of the passage of NEPA, which was not intended to preempt *state* consideration of environmental or other issues. *See* note 16 *supra*.

[71] Congress understandably did not trouble to reiterate this fact at each point in its deliberations, but when each of the statements which petitioners quote concerning the AEC's responsibility over the construction and operation of reactors (Pet.Br. at 24–28) is read in context, it becomes clear that such statements were made with explicit or implicit reference to the problem of *radiation hazards*, and to the desirability of *continuing the AEC's responsibility in this area. See, e.g., Federal-State Relationships in the Atomic Energy Field: Hearings Before the Joint Comm. on Atomic Energy*, 86th Cong., 1st Sess. 288–91 (1959) (remarks of AEC Comm'r Graham that the purpose of the Act is to allocate "radiation safety responsibilities"); *id.* at 301–02, 306–08 (remarks of Mr. Lowen-

vest the AEC with any new regulatory authority, or purport to preempt any pre-existing category of state authority.[72]

Indeed, in the 1959 amendments, Congress specifically reaffirmed its intent to preserve broad state authority over these subjects. In subparagraph (k) of Section 274, Congress provided:

> "Nothing in this section shall be construed to affect the authority of any State or local agency to regulate activities [of AEC licensees] *for purposes other than protection against radiation hazards.*" 42 U.S.C. § 2021(k) (emphasis added).

The Solicitor General quarrels with the Ninth Circuit's reading of Section 274(k) "as an affirmative grant of authority 'to regulate for purposes other than protection against radiation hazards.' " S.G.Br. at 26 (*quoting* A. 33). Yet it is hard to read the section any other way, and the Joint Committee on Atomic Energy confirmed that this is indeed the proper read-

---

stein of the Office of General Counsel that, under §274(c), the AEC must "continue its regulatory role," which as noted by Rep. Durham, was only "[i]n regard to hazards from radiation"); *id.* at 492–93 (Mr. Lowenstein's response to Chairman Anderson that the AEC has "preempted the field" is immediately preceded by Sen. Hickenlooper's statement that subsection (k) is intended "to put the *complete control of radiation hazards* . . . in the Federal Government. So we are preempting *that field* in this section.") (emphasis added).

[72] Although the Solicitor General leaps to the *conclusion* that this 1959 amendment preempts all state authority over nuclear power plants and waste disposal, his own actual *reading* of the amendment is to the contrary. He states that "[t]he principal substantive provision of the amendment, Section 274(b), . . . authorizes the NRC, by agreements with state governors, to discontinue its regulatory authority" over certain nuclear materials, and "[t]he principal limitation on the subject matter of such agreements is contained in Section 274(c). . . ." S.G.Br. at 12–13; *cf.* Pet.Br. at 24–25. The AEC's contemporaneous analysis of "the kinds of activity reserved to the Commission" by Section 274(c) (S.G.Br. at 13–14) contained no suggestion by the Commission that these were subjects which the states were forbidden to regulate. Moreover, the legislative history does *not* indicate that "this authority reserved to the Commission was to be *exclusive*." S.G.Br. at 14 (emphasis added). The Solicitor General's oft-repeated reference to the House Report's concern for the technical complexity and national security implications of regulating the *radiation hazards* posed by nuclear power plants and waste disposal (*see, e.g.*, S.G.Br. at 14 n.12) explains why the AEC was not allowed "to discontinue its regulatory authority" over these matters, but contains no suggestion that states were to be ousted from *all* authority over nuclear power plants and waste disposal.

ing: "[t]his subsection is intended to make it clear that the bill does not impair the State authority to regulate activities of AEC licensees for the manifold health, safety and economic purposes other than radiation protection." [73]

Petitioners make much of brief colloquies between David Toll, an attorney for the Joint Committee on Atomic Energy, and two witnesses at the 1959 Congressional Hearings, in which Mr. Toll proposed that an earlier version of Section 274 be amended to provided that the AEC have "sole" or "exclusive" responsibility for licensing of reactors. Pet.Br. at 26–27 n.30. As a result, petitioners claim that Congress adopted an "express provision for exclusive AEC regulation in *almost exactly the words* that had been suggested by the Joint Committee's counsel." *Id.* at 27 n.30 (emphasis added). However, even if this were an accurate characterization of the derivation of the final language in the 1954 Act (which it is not), it would still be decisive that what was *omitted* in Congress' asserted adoption of Mr. Toll's language were *the very words* "sole" or "exclusive."

Petitioners also cite *Northern States Power Co. v. Minnesota*, 447 F.2d 1143 (8th Cir. 1971), *aff'd mem.*, 405 U.S. 1035 (1972), for the proposition that the 1959 Act granted the AEC exclusive control over *all* aspects of the "construction and

---

[73] S.Rep. No. 870, 86th Cong., 1st Sess. 12 (1959). Petitioners also quote a letter from the AEC to Congress, stating that Section 274(k) was designed only to preserve state laws "on the fringe of the preempted area," which petitioners assert does not include any "matters pertaining to the construction and operation of nuclear power plants." Pet.Br. at 30–31; *see also* S.G.Br. at 27–28, 35. Petitioners have misread the legislative history. In fact, the Joint Committee deleted from the penultimate draft of Section 274(k) an express preemption provision that the AEC's letter warned might deter courts from sustaining state laws enacted for purposes other than protection against radiation hazards. Even that provision, however, would have expressly preempted only state authority over "the control of radiation hazards." *See* S. 2568, 86th Cong., 1st Sess., *reprinted in* 1959 Hearings, *supra* note 71, at 488. With or without this express preemption provision, the prior version of subsection (k) expressly permitted states to regulate for all "purposes other than protection against radiation hazards." Thus, the "preempted area" referred to in the AEC's letter was the "control" of "radiation" (*see* Pet. Br. at 30), and not any other aspect of the construction and operation of nuclear reactors.

operation" of nuclear reactors. Pet.Br. at 22–23.[74] However, the Eighth Circuit itself in *Northern States* interpreted federal preemption far more restrictively:

> "The only logically acceptable reason for inclusion of subsection (k) . . . was to make it clear that Congress was not, by subsection (c) of the 1959 amendment, in any way further limiting the power of the states to regulate activities, *other than radiation hazards,* associated with those areas over which the AEC was forbidden by that subsection to relinquish its control." 447 F.2d at 1150 (emphasis in original).

Lacking support in the Atomic Energy Act itself, petitioners and their *amici* suggest that certain *decisions* made by the NRC *under* the Atomic Energy Act have somehow preempted state authority of the character exercised by the California laws. In particular, they discern a supposed "federal policy" or "judgment" to continue NRC licensing of reactors in advance of a solution to the waste disposal problem and claim that the waste disposal law (§ 25524.2) conflicts with this federal policy or judgment. Pet.Br. at 41–42; S.G.Br. at 19–21. But even assuming that federal preemption can extend beyond the statute on which it rests, the fact is that the NRC's initial decision in 1977 to continue reactor licensing was based strictly on radiation safety considerations—as described in detail *supra* at 10 n. 18; it cannot be construed to oust state judgments based on entirely distinct, and wholly compatible, reliability and cost considerations—considerations never faced by the NRC and indeed beyond its jurisdiction.[75]

---

[74] *Northern States* held that Minnesota's effort to regulate radioactive waste releases from nuclear plants was preempted by the Atomic Energy Act. 447 F.2d at 1144. This Court's summary affirmance approves only that narrow holding and "is not to be read as an adoption of the reasoning supporting the judgment under review." *Zobel v. Williams* 102 S. Ct. 2309, 2315 n. 13 (1982). *See also Mandel v. Bradley*, 432 U.S. 173, 176 (1977).

[75] Moreover, as discussed *supra* at 10-13, there has been continuing federal dispute and uncertainty over the manner in which the adequacy or impact of radioactive waste disposal should be factored into the individual reactor licensing decisions made by the NRC's licensing boards. The mere existence of this uncertainty, which could affect the validity of existing reactor licenses (*see* note 21 *supra*), underscores the legitimacy of California's concern about relying on additional nuclear power plants (beyond the seven which already exist), so long as the waste disposal problem remains unresolved at the federal level. This does not mean the State assumes the federal government will fail to protect the public. To

For, as this Court has made clear, federal regulatory authority exercised for *one* purpose does not preempt state regulatory authority undertaken for a *different* but consistent purpose. [76]

Given the narrow ambit of the NRC decisions referred to, it is even less tenable to suggest, as the Solicitor General does (S.G.Br. at 20–21), that an alleged "tacit acquiesence" in these decisions by Congress somehow disenfranchises state regulation undertaken for different purposes.[77]

---

the contrary, the more confidence the State has that the federal government *will* carry out its radiation-protection mission regardless of unforeseen difficulty and *regardless of the cost of overcoming it*, the more justification the State has for being concerned about uncertainty in how waste disposal will be achieved.

[76] *See, e.g., Huron Portland Cement Co. v. Detroit*, 362 U.S. 440, 445–46 (1960). As the Solicitor General correctly notes, in *Ray v. ARCO*, 435 U.S. 151 (1978), this Court held that the Department of Transportation's statutory determination that oil tankers meeting particular standards were *sufficiently safe* for navigable waters foreclosed different or more stringent *state safety standards*. *See* S.G.Br. at 12. The Court in *Ray* found the state safety laws preempted because "[t]he federal scheme thus aims precisely at the same ends . . . ." *Id.* at 165. But the Court emphasized that this federal authority "does not prevent a state or city from enforcing local laws having other purposes." 435 U.S. at 164. Moreover, as discussed *supra* at 26 & n. 41, while there may be a need for national, uniform standards for the use of navigable waters, which formed the basis for preemption in *Ray* (*see* 435 U.S. at 163), Congress did not intend that there be national, uniform standards for selecting energy technologies under the Atomic Energy Act, but expressly reserved authority over this issue for the states. Thus, the Solicitor General further errs in attempting to equate (a) a federal policy not to attach certain conditions *nationally* to the commercial use of nuclear power by state-regulated public utilities, with (b) a federal determination that states may not *themselves* attach those conditions *locally* as a matter of state regulatory policy. *See New York Tel. Co. v. New York State Dep't of Labor*, 440 U.S. 519, 544–45 (1979) (opinion of Stevens, J., joined by White and Rehnquist, JJ.); *DeCanas v. Bica*, 424 U.S. 351, 360–61 n.9 (1976); *Kewanee Oil Co. v. Bicron Corp.*, 416 U.S. 470, 493 (1974). The latter determination has never been made at the federal level.

[77] Reliance upon tacit congressional approval is often "shaky business," as this Court noted in the case relied upon by the Solicitor General (S.G. Br. at 21), *Power Reactor Dev. Co. v. International Union of Elec., Radio and Mach. Workers*, 367 U.S. 396, 409 (1961). There is no evidence in the present case that anyone brought to Congress' attention, much less actually put in issue before Congress, the question whether states, from the standpoint of ensuring a reliable supply of electricity, should be deprived of their right to slow or halt their dependence on additional increments of nuclear power generation. In contrast, in *Power Reactor*, the Court noted that the specific agency policy in issue had "time and again been brought to the attention of the Joint Committee of Congress

Thus, there is no warrant for the effort of petitioners and their *amici* to expand the scope of NRC jurisdiction beyond what was intended by Congress and beyond what has in fact been implemented by the NRC itself.

B. *Because California's Laws Were Motivated By Concerns Other Than the Safety of its Citizens From Radiation Hazards, They Fall Squarely Within the Express Authority Affirmed by Section 274(k) of the Atomic Energy Act.*

By their terms, the California laws neither purport nor operate to regulate nuclear facilities for purposes of protecting against radiation hazards.[78] The district court made no finding to the contrary, and the Ninth Circuit concluded, after a careful review of the legislative history of these enactments, that they were not "aimed at radiation hazards." A. 37. Indeed, there was uncontroverted evidence in the district court from experts on nuclear technology which explained why California was justifiably concerned

---

on Atomic Energy." *Id.* at 408. At a minimum, before congressional approval may be inferred from inaction, there must be a clear showing that Congress was actually familiar with an issue and meant to incorporate a particular position thereon into the fabric of the statute. *Morton v. Ruiz,* 415 U.S. 199, 237 (1974); *Commissioner v. Glenshaw Glass Co.,* 348 U.S. 426, 431 (1954). Such a showing is clearly absent here.

[78] While petitioners and their *amici* argue that the purpose of California's laws is the regulation of radiation hazards, ultimately they do an about face and declare that the purpose of these laws is irrelevant because they frustrate congressional objectives or "directly conflict" with the federal regulatory scheme. Pet.Br. at 41–43, 48–49; S.G.Br. at 26–28. However, the California laws do not frustrate any congressional objective, as demonstrated *supra* at 31–35, and the assertions of conflict with the federal regulatory scheme are merely rhetorical, as demonstrated *infra* at 51–55. In any event, the suggestion that "an otherwise valid state purpose cannot save a state law" from preemption in this case (Pet.Br. at 48; *cf.* S.G.Br. at 26–27), simply reads Section 274(k) out of the Atomic Energy Act. Thus, *Perez v. Campbell,* 402 U.S. 637, 651–52 (1971), is inapt. There, this Court held that a state law which frustrates a federal objective is not saved from preemption merely because the state legislature had a legitimate purpose in mind. But the federal statute given preemptive effect in *Perez* did not expressly defer to the state legislature's "purpose," as does Section 274(k) of the Atomic Energy Act. Because Congress has expressly deferred to state actions taken "for *purposes* other than protection against radiation hazards" (emphasis added), the two laws challenged here cannot be condemned if enacted for such "other" purposes.

about the reliability of additional nuclear power plants, so long as there remained "clogs" in the nuclear fuel cycle.[79] In those circumstances, there is no basis whatever for disturbing the Ninth Circuit's determination that the Legislature's choice "to mandate reliance upon other energy sources until these uncertainties associated with nuclear power are resolved . . . is expressly authorized under sections 271 and 274(k) of the Atomic Energy Act of 1954." A. 40.

In challenging what they regard as the purposes of these laws, petitioners offer no reason to depart from the traditional deference that federal courts have shown to the "declared primary purpose[s]" of state legislation. *Arizona v. California,* 283 U.S. 423, 455–56 (1931). When those declared purposes are otherwise legitimate, this Court in particular has been most reluctant to "impugn the motives" of state lawmakers. *Crawford v. Board of Education,* 102 S.Ct. 3211, 3222 (1982).[80]

But even a more searching look at California's purpose here confirms it to be other than radiation safety, as discussed *supra* at 2–8. Petitioners and their *amici* do not, and cannot, deny that there *is* genuine uncertainty about the provision of adequate storage for spent fuel from nuclear power plants, over the short and long term. Nor can they deny that the reliability and efficiency of nuclear power plants as a source of electricity is uncertain to that degree. It surely cannot be gainsaid that this is a legitimate state concern, [81] and the

---

[79] *See* notes 3, 4 and 6 *supra.*

[80] Just as the law upheld in *Crawford* sought "by its plain language . . . only to embrace the requirements of the Federal Constitution . . ." (*id.* at 3217), so too Section 25525 of the Warren-Alquist Act, which is applicable to the Energy Commission's implementation of the two laws challenged here, specifies that "in no event shall the Commission make any finding in conflict with applicable federal law or regulation." A similar provision was given effect by this Court in denying a preemption claim in *Joseph E. Seagram & Sons, Inc. v. Hostetter,* 384 U.S. 35 (1966). *See* note 31 *supra.*

[81] The construction of nuclear power plants in advance of the development of the technology to dispose of their wastes has been analogized to "building and selling a Boeing 747, and leaving the development and construction of airports, radar and pilot skills to some late date." Bupp, "The Nuclear Stalemate," in *Report of the Energy Project at the Harvard Business School* 122 (R. Stobaugh & D. Yergin, eds., 1979).

principal author of the Warren-Alquist Act offered uncontradicted testimony in the district court that the two laws challenged here were indeed intended to aid in assuring California a reliable electric energy supply source—*not* to regulate radiation hazards. Warren Dec. at ¶¶ 22–31 [J.A. 446–51]. His legislative committee's report on these bills, extensively reviewed by the Ninth Circuit in its opinion (A. 37–40), clearly states their purposes in just those terms.[82] The California laws therefore fit squarely within the authority expressly reserved by Congress to the states in Section 274(k) of the Atomic Energy Act, to regulate "for purposes other than protection against radiation hazards."[83]

Petitioners and their *amici* nevertheless insist that California is *covertly* attempting to regulate radiation hazards.[84] Lacking support in the language of the statutes, in their legislative history, in the district court record, or even in the

---

[82] The "Reassessment Report" is discussed *supra* at note 7. Petitioners point to a single passage in this report as an alleged demonstration that the two laws were designed to confer "explicit authority to regulate concerning radiation safety." Pet.Br. at 47. The quoted passage refers, however, not to the two laws challenged here but to the general provisions of the Warren-Alquist Act and makes clear that under the Act "[t]he [State Energy] Commission does not have clear and explicit authority to condition its approval [of nuclear power plants] on waste disposal safety or reactor safety . . . ." *Id.* On the other hand, the petitioners ignore passages in the Reassessment Report which deal with the two laws in fact challenged here and which describe their purposes as reliability-related (as quoted *supra* at 5).

[83] For this reason, among others, these laws are readily distinguishable from the Illinois statute which was invalidated in *Illinois v. General Elec. Co.*, 683 F.2d 206 (7th Cir. 1982), upon which petitioners rely. Pet.Br. at 40. The Illinois law barred interstate shipments of spent fuel into Illinois, and thus had no bearing on the reliable operation of instate power plants. The Seventh Circuit's failure to address Section 274(k) at all is understandable, since there was apparently no dispute that the Illinois statute was enacted because of "the state's interest in safeguarding its residents from the hazards of radioactivity." 683 F.2d at 213.

[84] Petitioners purport to find evidence of an incipient intent to regulate radiation hazards in a letter from the Commission's staff concerning the contents of PG&E's initial application for a nuclear power plant license, and in the unofficial draft report of the Commission's two-member Nuclear Fuel Cycle Committee. As discussed *supra* at 23–24 & n.37, those materials are neither ripe for review nor indicative of any intent to regulate radiation hazards.

district court's findings, their entire argument rests upon a simple *non sequitur*: petitioners assert that the waste disposal law, for example, must be treated as "[a]n interim measure to reduce the risk of radiation damage" because *one way* to achieve this end is "to prohibit the construction and operation of new nuclear power plants," as California has done in this law. Pet.Br. at 46.

This mode of reasoning, however, fundamentally confuses ends and means. A state might legitimately "prohibit the construction and operation of new nuclear power plants" for any number of reasons—including their non-radiation environmental impact, their cost, problems with their reliability, or doubts as to whether they are needed. It blatantly begs the question to assert that "[t]he very problem created by the existence of nuclear waste is the risk that it may cause radiation damage." Pet.Br. at 46.[85] That fact does not make it illegitimate for a state to conclude that nuclear power cannot be counted a reliable or economical source of electricity until some method is in place to dispose of its wastes.[86]

---

[85] Similarly, petitioners attempt to equate the purposes of the waste disposal law with those underlying Proposition 15, an initiative rejected by the voters of California shortly after passage of the laws challenged here. Pet.Br. at 46–47. Because both the waste disposal law and Proposition 15 contemplated a moratorium on further nuclear power plants in the state, petitioners apparently consider it irrelevant that the ends sought to be achieved by the two laws were decidedly different, and that one passed and the other was defeated. However, Proposition 15 would have required, as a predicate for further reactor licensing, the removal of the federal liability limits in the Price-Anderson Act, 42 U.S.C. § 2210 (1976 & Supp. IV 1980), and numerous safety assurances regarding nuclear power plant operation—matters not addressed at all in the provisions challenged here. Proposition 15 also dealt with the subject of nuclear waste disposal, but its expressed concern—again decidedly different from that of the provisions challenged here—was that there be "no reasonable chance . . . of intentional or unintentional escape of such wastes or radioactivity into the natural environment which will eventually adversely affect the land or the people of the State of California." Petition for Writ of Certiorari, *Pacific Legal Found. v. State Energy Resources Conservation and Dev. Comm'n*, No. 81-1944, Appendix at 23. The Ninth Circuit found these differences, as they were emphasized in the Reassessment Report, to be significant. A. 40.

[86] The Solicitor General utilizes equally specious reasoning by analogy in his brief. He asserts that the "judgment" which underlies the waste disposal law is "that wastes from reactors built today are likely to create radiation hazards" and that this is "indistinguishable from the judgment made by Minnesota in *Northern States Power Co.* v. *Minnesota, supra* (that liquid

C. *Because California's Laws Do Not by Their Terms "Regulate" Radiation Hazards or Interfere With the NRC's Regulatory Scheme, They Cannot be Considered Preempted in Any Event.*

This Court has repeatedly admonished that a holding of implied preemption does not flow automatically from a finding that the subjects addressed by state and federal regulation overlap or even coincide.[87] Instead, any finding of implied preemption requires a careful assessment of the particular interests and objectives underlying the federal and state enactments at issue, followed by an attempt, wherever possible, to "reconcile 'the operation of both statutory schemes with one another rather than holding one completely ousted.' " *Merrill Lynch, Pierce, Fenner & Smith, Inc. v. Ware,* 414 U.S. 117, 127 (1973), *quoting Silver v. New York Stock Exchange,* 373 U.S. 341, 357 (1963).

Petitioners and their *amici* have abjured any such ap-

---

and gaseous wastes released from reactors are likely to pose radiation hazards)." S.G.Br. at 23. Both sides of the analogy fail. The waste disposal law does not submit to the State the question whether spent fuel from nuclear reactors poses radiation hazards. Nor is California asserting "an interest in a secondary effect" of radiation exposure, "the expense of minimizing danger to health," as the Solicitor General contends. *Id.* California is not concerned about "radiation exposure," since *California has not been targeted as a likely site for the disposal of the wastes in question. See* note 89 *infra.* The real question submitted to the State by the waste disposal law is whether the technology to store those wastes will be in place when needed to assure the continued operation of reactors. *See also supra* note 6. On the other side of the Solicitor General's attempted equation, the Minnesota statute in *Northern States* was held preempted *not* because Minnesota had made a "judgment" that the emissions posed radiation hazards but because Minnesota had in fact *purposefully regulated* those radiation hazards. The question for this Court, therefore, is not whether California is endeavoring "to make a judgment which Congress has reserved to the NRC" (S.G.Br. at 23), but whether it is regulating "for purposes other than protection against radiation hazards."

[87] *See DeCanas v. Bica,* 424 U.S. 351, 360–61 (1976); *Kewanee Oil Co. v. Bicron Corp.,* 416 U.S. 470, 493 (1974); *Colorado Anti-Discrimination Comm'n v. Continental Airlines,* 372 U.S. 714, 722 (1963). As the Court stated in *California v. Zook,* 336 U.S. 725, 730 (1949), "the fact of identity does not mean the automatic invalidity of state measures. Coincidence is only one factor in a complicated pattern of facts guiding us to congressional intent." *Cf. New York Tel. Co. v. New York State Dep't of Labor,* 440 U.S. 519, 544–45 (1979) (opinion of Stevens, J., joined by White and Rehnquist, JJ.).

proach, substituting rhetoric for a pragmatic analysis of the manner in which the federal and state interests actually interact. Thus, this Court is told that the California laws constitute an "interference with the federal regulatory scheme" (Pet.Br. at 41), or that the State's laws make a "judgment which Congress has reserved to the NRC" (S.G.Br. at 23)—without any showing that the State's laws in fact conflict with or undermine any radiation-protection goals, responsibilities or actions of the NRC.

It may be assumed *arguendo* that the Atomic Energy Act vests the NRC with exclusive jurisdiction (1) to license high-level waste disposal facilities which may eventually be proposed by DOE; and (2) to protect against radiation hazards in the licensing and daily operations of nuclear reactors. In neither respect do the challenged laws hamper the NRC's jurisdiction or intrude upon its radiation-safety goals. For example, although the waste disposal law predicates continued reactor licensing on the existence of a means of nuclear waste disposal, it is not a "regulation" *of nuclear waste disposal* at all: it dictates nothing about how, where, when, or whether nuclear wastes are to be disposed of.[88] Indeed, it bears emphasis that high-level waste repositories have never even been proposed for siting in California.[89]

Similarly, the waste disposal law is no more a "regulation"

---

[88] To "regulate," of course, is "to lay down the rule by which a thing shall be done." *FPC v. Corporation Comm'n*, 362 F.Supp. 522, 532 (W.D. Okla. 1973) (three-judge court), *aff'd mem.*, 415 U.S. 961 (1974). *See also United States v. E.C. Knight Co.*, 156 U.S. 1, 12 (1895); *id.* at 20 (Harlan, J., dissenting). Since the waste disposal law does not in any manner purport to affect the actual siting or licensing of a high-level waste disposal facility, it is absurd for the Solicitor General to assert that it "creates precisely the system of dual *regulation* which the [Atomic Energy] Act forbids." S.G.Br. at 21 (emphasis added). On the contrary, the waste disposal law was enacted precisely *because* "[t]he disposal of nuclear waste is a national problem that requires a national solution." *Id.* Acting in its own economic self-interest, the state has merely determined "to provide a pause in the deployment of nuclear power plants until . . . problems which may 'clog' the nuclear fuel cycle are resolved" at the federal level. Reassessment Report, *supra* at note 7.

[89] *See* Lash Aff. ¶ 11 [J.A. 419]. Thus, the waste disposal law bears no resemblance to other states' efforts to obtain a veto or "consultation and concurrence" over the siting of such a repository.

of *nuclear power plant construction* than is any other determination by a state agency to approve or not to approve any particular power plant proposal. And this state law certainly is not a "regulation" *of radiation hazards*: it sets no standard for radioactive accumulation, discharge, or exposure (*cf. Northern States Power Co. v. Minnesota, supra*); it imposes no control over the handling of any radioactive material; and it prescribes no rule as to the design, construction, maintenance, or operation of any nuclear facility. Indeed, it does not even broadly condition the State's approval of nuclear power plant construction upon a showing that the plant itself or the disposal of its wastes will be safe—either in normal operation or in the event of an accident—from a radiation-related standpoint.[90]

Nor does the storage law (§ 25524.1(b)) conflict in any manner with the NRC's regulatory scheme or undermine its radiation-safety responsibilities or goals. Although that law does authorize the State Energy Commission to review "on a case-by-case basis" the adequacy of spent fuel storage capacities for reactors, it does not purport to "regulate" *radiation releases or hazards* as such. And, even if the Commission's future application of this provision were to require greater storage capacity than does the NRC,[91] no one

---

[90] Petitioners decry the fact that the waste disposal law "explicitly provides that the State Energy Commission is required to make its own, *independent* determination whether 'there has been developed . . . and there exists a demonstrated technology or means for the disposal of high-level nuclear waste.'" Pet.Br. at 44 (emphasis in original). They never explain, however, why such authority should be deemed illicit. Having established conditions for the State's reliance on additional nuclear power generation, the Legislature granted the Energy Commission authority to determine whether the conditions had been met, pursuant to its general authority to license all power plants in the State. As the Ninth Circuit noted, there is no warrant for any speculation now that the Commission's findings regarding those conditions will conflict at some point in the future with an NRC determination that has yet to be made. A. 40 n.35 (*citing Goldstein v. California*, 412 U.S. 546, 554 (1973) and *Rice v. Santa Fe Elevator Corp.*, 331 U.S. 218, 237 (1947)).

[91] Since the provision has never been applied or interpreted by the Energy Commission, the Ninth Circuit concluded that "we cannot know whether the Energy Commission will ever find a nuclear plant's storage capacity to be inadequate," and held the provision not ripe for review. A. 25.

has suggested that this would in any manner compromise the NRC's radiation-safety objectives.[92]

Finally, petitioners and their *amici* do not dispute that the obviously relevant reliability and cost considerations which underlie the California laws fall wholly outside the regulatory jurisdiction of the NRC under the Atomic Energy Act.

In sum, when the actual functions served by the federal and state enactments are reviewed in these concrete terms, it is apparent that the operation of the two statutory schemes can be fully reconciled without either conflict or overlap. In these circumstances, the Court need not even consider what "motivated" the passage of the California laws, in order to sustain them. To indulge the kinds of suspicions which pervade the briefs of petitioners and their *amici* would expose all state regulation of nuclear power to unsettling attacks.[93]

---

[92] In addition, this provision requires that on-site storage facilities include sufficient capacity for the removal of the full core of fuel rods (a "full core reserve storage capacity"). While the Solicitor General correctly notes that NRC regulations do not require full core reserve storage capacity (S.G.Br. at 26 n.26), he does not claim that any radiation safety objective is served by *not* requiring this capacity. As petitioners themselves have observed, the converse is true: the NRC does not require such capacity, *because* no safety considerations are affected by it. On the other hand, both petitioners and the Solicitor General have acknowledged that a full core reserve capacity is desirable in order to avert prolonged and costly shutdowns of the reactor for repairs or maintenance. *See* note 5 *supra*. Since these legitimate reliability considerations are not even part of the NRC's jurisdiction over this matter, it is simply incomprehensible why the storage law's requirement of a full core reserve storage capacity should be deemed a "blatant interference with the functions of the NRC," as the Solicitor General claims. S.G.Br. at 26 n.26. His further suggestion that states should be required to ignore an obvious means of avoiding such costly interruptions—the requirement of a full core reserve—and compelled instead to address the problem by "fixing rates directly" (*id.*), thus serves no discernible federal policy and would gratuitously intrude upon the state's exercise of its traditional authority. *See* note 63 *supra*.

[93] Virtually *every* traditional state regulation of the cost and reliability of facilities, or of "rates and services," as the Solicitor General puts it (S.G.Br. at 10), can be characterized as a "radiation protection judgment" in the Solicitor General's dictionary, if it results in a decision not to permit a nuclear power plant to proceed. For example, a simple decision that a nuclear facility is too expensive must obviously be based on knowledge of the cost of NRC-required safety systems and the potential for cost escalation due to possible future NRC action. Yet this undisputed power of state ratemaking authorities (*see* notes 49, 63 *supra*) can be characterized in precisely the way the Solicitor General disparaging-

Indeed, acceptance of suspicions of this sort as a basis for judicial inquiry would expose to similar jeopardy *all* state regulation on *any* subject touched by a federal regulatory scheme. So radical a result should be avoided absent a clear statement of congressional intent. There is no such statement in the Atomic Energy Act. On the contrary, that Congress in fact intended no such result is clear from its express confirmation of state authority over nuclear power in Sections 271 and 274(k) of the Act.

CONCLUSION

Invalidation of the two laws at issue in this case would unjustifiably undercut California's ability to assure its people a reliable and efficient supply of electricity. And it would do so simply because the *source* of the State's concerns relates to nuclear fuel and focuses upon the costs and interruptions still associated with the risk of having to shut down, in compliance with federal regulation, power plants that rely upon such fuel.

Far from mandating any such nuclear blindness by the states, Congress has expressly authorized state regulation of just this sort. To strike such regulation down on the theory that states, in the discharge of their distinct responsibilities to their citizens, must automatically embrace the most optimistic hopes of private industry and its federal regulators with respect to an energy source that Congress has sought to make safely available, would not preserve the integrity of the regulatory scheme Congress enacted but rather would create a regulatory vacuum Congress never so much as contemplated. And the precedent such a decision would leave in its wake

---

ly describes the intent of the waste disposal law. The ratemaking body's decision not to afford favorable rate treatment or to deny a certificate of public convenience and necessity "protects ratepayers against [the] expense [of mitigating radiation hazards] by preventing its cause from occurring" and can be characterized as a decision "simply to build safer kinds of power plants." S.G.Br. at 22. Thus, the Solicitor General's argument demonstrates the futility of speculation as to a state's motives in pursuing its traditional regulatory path. Either Congress has prohibited all state regulation inhibiting development of nuclear power, or, as the Ninth Circuit correctly determined, states "are permitted to regulate in such areas as economics and the environment." A. 34.

could not be successfully confined to the atomic energy field: its rationale would necessarily jeopardize state authority in every area where intelligent attention to state and local needs might be thought to require a cautious assessment of how federal actions are likely to impinge upon what state and local government legitimately seek to accomplish.

A ruling to this effect—which would, ironically, leave the petitioners' concrete problems unredressed—would radically alter the federal-state balance without warrant in any Act of Congress or in any provision of the Constitution.

The judgment of the Court of Appeals for the Ninth Circuit should therefore be affirmed or the case remanded with directions to dismiss as unripe the challenge to the two laws at issue herein.

Respectfully submitted,

LAURENCE H. TRIBE
Counsel of Record
Chief Appellate Counsel
1525 Massachesetts Avenue
Cambridge, MA 02138
(617) 495-4621

ROGER BEERS
KATHRYN BURKETT DICKSON
Special Counsel
380 Hayes Street, Suite One
San Francisco, CA 94102

WILLIAM M. CHAMBERLAIN
General Counsel
DIAN GRUENEICH
Deputy General Counsel
California Energy Resources
Conservation and Development Commission
1111 Howe Avenue
Sacramento, CA 95825

Counsel for Respondents *

RALPH CAVANAGH
DAVID B. EDELSON
Natural Resources Defense Council, Inc.
25 Kearny Street
San Francisco, CA 94108
Counsel for Respondents-Intervenors

* With assistance from:
Alison Melnick
David H. Remes

Petitioner's Reply Brief

Supreme Court, U.S.
FILED
DEC 30 1982
ALEXANDER L. STEVAS
CLERK

No. 81-1945

IN THE

Supreme Court of the United States

October Term, 1982

PACIFIC GAS AND ELECTRIC COMPANY and SOUTHERN CALIFORNIA EDISON COMPANY,

Petitioners,

vs.

STATE ENERGY RESOURCES CONSERVATION AND DEVELOPMENT COMMISSION, *et al.*,

Respondents.

On Writ of Certiorari to the United States Court of Appeals for the Ninth Circuit.

PETITIONERS' REPLY BRIEF.

JOHN R. MCDONOUGH,
HOWARD B. SOLOWAY,
Counsel of Record,
BALL, HUNT, HART, BROWN AND BAERWITZ,
450 North Roxbury Drive,
Beverly Hills, Calif. 90210,
(213) 278-1960,
Attorneys for Petitioners.

(Names and Addresses of Attorneys Of Counsel are listed on Inside of Cover.)

Parker & Son, Inc., Law Printers, Los Angeles. Phone 724-6622

TABLE OF CONTENTS

Page

I.

Introduction 1

II.

Petitioners' Challenge to Sections 25524.1(b) and 25524.2 Is Ripe for Review 2

A. This Court's Limited Grant of Certiorari Does Not Deprive Petitioners' Challenge of Ripeness 2

B. Petitioners' Challenge Is Ripe Because It Raises Purely Legal Issues 4

III.

The Record Does Not Support Respondents' Assertion That Sections 25524.1(b) and 25524.2 Constitute Traditional State Regulation of Public Utilities 7

IV.

Sections 25524.1(b) and 25524.2 Would Be Invalid Even If They Were Concerned With the Economic Feasibility of Nuclear Power Plants 12

V.

The Regulatory Jurisdiction Reserved to the Federal Government by Section 274 of the Atomic Energy Act Is Not Limited to Radiation Hazards but Extends to All Aspects of the Construction and Operation of Nuclear Power Plants 14

VI.

Section 271 of the Atomic Energy Act Does Not Validate Sections 25524.1(b) and 25524.2 16

VII.

Conclusion 17

TABLE OF AUTHORITIES

Cases — Page

Gardner v. Toilet Goods Association, 387 U.S. 167 (1967) 6

Larson v. Valente, 102 S.Ct. 1673 (1982) 3

Montana Power Co. v. EPA, 608 F.2d 334 (9th Cir. 1979) 8

Orr v. Orr, 440 U.S. 268 (1979) 3

Perez v. Campbell, 402 U.S. 637 (1971) 12

Public Service Co. v. NRC, 582 F.2d 77 (1st Cir.), cert. denied, 439 U.S. 1046 (1978) 16, 17

Selman v. United States, 498 F.2d 1354 (Ct.Cl. 1974) 8

Toilet Goods Association v. Gardner, 387 U.S. 158 (1967) 5, 6

Train v. Colorado Public Interest Research, Inc., 426 U.S. 1 (1976) 12

Valley Forge Christian College v. Americans United for Separation of Church and State, 102 S.Ct. 752 (1982) 3

Vermont Yankee Nuclear Power Corporation v. Natural Resources Defense Council, Inc., 435 U.S. 519 (1978) 1

Wilbur and Mary Stark, Re, 67 Cal. P.U.C. 632 (1967) 11

Constitution

California Constitution, Art. III, Sec. 3.5 7

Miscellaneous

California Assembly Bill No. 3242 11

100 Congressional Record, p. 12197 (1954) 17

H.R. 3809, Nuclear Waste Policy Act of 1982, 128 Congressional Record, pp. S 15621-S 15670 (Dec. 20, 1982) 13

Senate Report No. 870, 86th Cong., 1st Sess., p. 9 .. 15

Statutes Page

Atomic Energy Act, Sec. 271 (42 U.S.C. § 2018) 16, 17
Atomic Energy Act, Sec. 274 (42 U.S.C. § 2021) 14, 15
Atomic Energy Act, Sec. 274(c) (42 U.S.C. § 2021(c)) 13
California Administrative Code, Title 20, Secs. 1701-1768 4
California Public Resources Code, Sec. 25500 8
California Public Resources Code, Sec. 25511 9
California Public Resources Code, Sec. 25514.1(b) 1, 3, 4, 6, 7, 12, 13, 14, 15, 16, 17, 18
California Public Resources Code, Sec. 25514.3 11
California Public Resources Code, Sec. 25518.5 11
California Public Resources Code, Sec. 25519(i) 11
California Public Resources Code, Sec. 25524.2 .... 1, 3, 4, 6, 7, 8, 12, 13, 14, 15, 16, 17, 18
California Public Resources Code, Sec. 25525 7
California Public Utilities Code, Sec. 1001 10
California Public Utilities Code, Sec. 1003(c) 11
California Public Utilities Code, Sec. 1003(e) 11
California Public Utilities Code, Sec. 1003.5 11
California Public Utilities Code, Sec. 1093 11
California Public Utilities Code, Sec. 1093(a) 11

No. 81-1945

IN THE

Supreme Court of the United States

October Term, 1982

PACIFIC GAS AND ELECTRIC COMPANY and SOUTHERN CALIFORNIA EDISON COMPANY,

Petitioners,

vs.

STATE ENERGY RESOURCES CONSERVATION AND DEVELOPMENT COMMISSION, *et al.*,

Respondents.

PETITIONERS' REPLY BRIEF.

I.
INTRODUCTION.

In an attempt to justify the California regulatory action respecting nuclear power plants authorized and required by Cal. Pub. Res. Code Sections 25524.1(b) and 25524.2, as well as other provisions of the Warren-Alquist Act, respondents argue that such regulation falls within "traditional" state authority to determine the need for any electric power plant, nuclear or non-nuclear, and the acceptability of the costs of the facility.[1] The argument has a surface plausibility

[1]This traditional state regulatory role in respect of nuclear power plants has been recognized by this Court, *Vermont Yankee Nuclear Power Corporation v. Natural Resources Defense Council, Inc.*, 435 U.S. 519, 550 (1978), and petitioners have acknowledged such state authority. Petitioners' Brief at 29.

because a possible economic purpose can be advanced for almost any regulatory activity.

Respondents' argument is fallacious. The argument ignores the language of the two statutes in question, which says nothing about need or economic feasibility. It ignores the fact that the substantial State Energy Commission regulation of petitioners authorized and required by the two statutes is addressed not to economics but to ameliorating the risks of radiological damage associated with the generation of spent nuclear fuel and its interim storage and ultimate disposition. The argument studiously ignores what the State Energy Commission has said and done in the administration of the two statutes. And the argument also ignores the California regulatory scheme whereby the California Public Utilities Commission, *not* the State Energy Commission, determines need and acceptability of cost with respect to *all* proposed power plants.

The Court should reject respondents' argument, declare the two statutes ripe for review because, on their face and as applied by the State Energy Commission, they prevent petitioners from building new nuclear power plants in California, and the Court should declare the statutes invalid because they invade an exclusive sphere of federal regulation, thereby conflicting with and frustrating federal policies and purposes.

II.

PETITIONERS' CHALLENGE TO SECTIONS 25524.1(b) AND 25524.2 IS RIPE FOR REVIEW.

A. This Court's Limited Grant of Certiorari Does Not Deprive Petitioners' Challenge of Ripeness.

Respondents argue that petitioners' claim is not ripe for review because even if petitioners are successful, their injury (being prevented as a practical matter from building

new nuclear power plants) will not be fully redressed inasmuch as other sections of the Warren-Alquist Act, not to be reviewed by this Court, also prevent such construction. In respondents' view, petitioners should be denied a decision on the merits because the Court has exercised its discretion to limit the matters it chooses to review at this time.

Respondents cite one case in supposed support of this claim, *Valley Forge Christian College v. Americans United For Separation of Church and State*, 102 S. Ct. 752, 759 (1982). That case is inapposite. In the first place, the issue of *standing*, not ripeness, was there decided when the Court said that to establish standing a party must show that his injury is likely to be redressed by a favorable decision. In its limited grant of certiorari here, the Court chose to review not standing but ripeness and the *Valley Forge* case is thus not in point. Moreover, review was there denied for lack of a distinct and palpable injury to the plaintiff; clearly enough, the matter about which plaintiff complained would have been redressed by a favorable decision on the merits.

In discussing the "redressability" requirement in the context of standing, this Court has declared that the requirement is satisfied when a party "shows that a favorable decision will relieve a discrete injury to himself. He need not show that a favorable decision will relieve his *every* injury." *Larson v. Valente*, 102 S. Ct. 1673, 1682 n. 15 (1982) (emphasis added). Petitioners here have standing because a declaration that Sections 25524.1(b) and 25524.2 are invalid will remove the burden of dual and conflicting federal and state regulation of interim storage and permanent disposal of nuclear waste, even though other injuries to petitioners caused by the Warren-Alquist Act will not be relieved.[2]

---

[2]See also *Orr v. Orr*, 440 U.S. 268, 271-273 (1979), where standing was found even though success in the Supreme Court did not assure ultimate relief for the appellant.

Respondents' argument should also fail because the issue of ripeness in a case before this Court ought to be decided not in light of what issues the Court chooses to hear but rather what was in issue in the District Court. To rule otherwise would both unfairly penalize petitioners, who pleaded a justiciable case below, and limit the Court's ability to decide only those issues it concludes warrant its review at a given point in time.[3]

B. Petitioners' Challenge Is Ripe Because It Raises Purely Legal Issues.

Respondents also contend that the validity of Sections 25524.1(b) and 25524.2 should not be determined until they have been applied by the State Energy Commission, inferring that this has not yet occurred. The contention is belied by the record. The challenged statutes, among others, were applied when the State Energy Commission rejected petitioner PGandE's NOI for its Stanislaus nuclear project (A. 221-240), when the State Energy Commission issued its Data Adequacy Report explaining why the NOI was allegedly deficient (A. 241-304), when the Commission issued its January, 1978 interim decision setting forth its findings pertaining to Sections 25524.1(b) and 25524.2 and stating how it intended to apply them (J.A. 410-414), when its Nuclear Fuel Cycle Committee issued a Draft Report pertaining to the application of the statutes (J.A. 36-409), and when the Commission issued numerous regulations in which the statutes were given effect (Cal. Admin. Code Title 20, §§ 1701-1768).

---

[3]If respondents' argument were accepted, the Court should not dismiss the case for lack of ripeness but, instead, should broaden its writ of certiorari to review all of the issues decided by the courts below and schedule additional briefing and further argument.

Respondents argue these actions of the State Energy Commission should be ignored because they are not "final" agency actions, even though they have had the practical effect of preventing new nuclear power plant construction in California. (District Court Findings 17 and 21, A. 73-76.) Respondents would have this Court require petitioners to spend hundreds of millions of dollars to go through the preempted State Energy Commission regulatory process before challenging the Warren-Alquist Act — knowing full well that petitioners could never do so as a practical matter. Respondents seek to win by forfeit rather than by meeting petitioners' claims on the merits.

Review by this Court of the statutes in issue does not have to await further State Energy Commission action because petitioners' challenge to their validity raises purely legal issues: whether California can constitutionally prohibit construction of any new nuclear power plant until the State Energy Commission has approved the plant's provisions for storage of spent nuclear fuel and has also decided to its own satisfaction that there exists a demonstrated technology or means for the disposal of high-level nuclear waste.

Respondents do not dispute that purely legal issues are raised here; instead, they cite *Toilet Goods Association v. Gardner*, 387 U.S. 158 (1967), for the proposition that decision of purely legal issues should sometimes be deferred until there is further illumination of the factual record. In *Toilet Goods Association v. Gardner*, the regulations under attack provided that under certain circumstances the Commissioner of Food and Drugs "may" take certain action. In that context, this Court felt it should wait until the Commissioner acted before deciding whether his actions were lawful. Moreover, since declining jurisdiction would not significantly affect the parties seeking relief, there was no need for immediate judicial intervention.

In this case, there is no need to await further regulatory action: the challenged state statutes on their face, as applied to petitioner PGandE's Stanislaus nuclear project, and as they affect Edison's plans to build nuclear power plants, *now* prevent petitioners from building new nuclear power plants. Declining jurisdiction would affect petitioners adversely, by precluding them from ever being in a position to challenge the validity of Sections 25524.1(b) and 25524.2. Thus *Toilet Goods Association v. Gardner* is distinguishable.

The applicable authority is the companion case of *Gardner v. Toilet Goods Association*, 387 U.S. 167, 171 (1967), where the challenged regulations were self-executing and had a substantial, immediate impact upon the parties seeking relief. This Court held that the validity of the challenged regulations was ripe for review because consideration of the issues there presented would not be facilitated if raised in the context of their attempted enforcement. As in *Gardner v. Toilet Goods Association*, the petitioners here are faced with self-executing laws that now have a substantial adverse impact upon them. Section 25524.1(b) gives the State Energy Commission no discretion: it *must* regulate the interim storage of spent fuel and *must* deny permission to build a new nuclear power plant unless it is satisfied on this score; moreover, the proviso to the statute dictates that such interim storage *must* be "in an offsite location to the extent necessary to provide continuous onsite full core reserve storage capacity." Under Section 25524.2 the State Energy Commission *must* deny permission to build a new nuclear power plant until the Commission makes an independent finding that "there exists a demonstrated technology or means for the disposal of high-level nuclear waste." Again, the regulation is self-executing and has a present and severe adverse effect on petitioners. More specific action by the State En-

ergy Commission pursuant to the mandate of Sections 25524.1(b) and 25524.2 is not necessary to establish ripeness because such action would not make the legal issues any clearer.[4]

III.

THE RECORD DOES NOT SUPPORT RESPONDENTS' ASSERTION THAT SECTIONS 25524.1(b) AND 25524.2 CONSTITUTE TRADITIONAL STATE REGULATION OF PUBLIC UTILITIES.

Nothing on the face of the 1976 Nuclear Laws, including Sections 25524.1(b) and 25524.2, supports respondents' assertion that they were enacted in the exercise of California's power to decline on economic grounds to authorize construction of electric power plants. Neither statute contains a word about economic feasibility. Rather, the Nuclear Laws as written clearly reflect concern about the radiological hazards created by spent nuclear fuel. The State Energy Commission is directed to determine, on a case-by-case basis, whether (in its opinion) a proposed nuclear power plant has adequate interim spent fuel storage and to determine whether (in its opinion) there exists a demonstrated technology or means for the disposal of high-level nuclear

---

[4]Respondents also contend that the challenge presented is not ripe because Section 25525 of the Warren-Alquist Act directs the State Energy Commission not to "make any findings in conflict with applicable federal law or regulation." The argument apparently is that the State Energy Commission will never apply a preempted part of the Warren-Alquist Act because Section 25525 tells it not to do so. The argument ignores the California Constitution, which prohibits the State Energy Commission from holding invalid any statute that it administers. Cal. Const., Art. III, Section 3.5. Thus, Section 25525 is invalid under California's Constitution insofar as it directs the State Energy Commission not to give effect to any provision of the Warren-Alquist Act upon a finding that it is preempted by federal law.

waste.[5] This is not economic regulation of nuclear power plants but radiological safety regulation of their construction and operation.[6]

Still another indication that the Nuclear Laws are not concerned with the economic feasibility of nuclear power plants is the fact that the Warren-Alquist Act and the regulatory jurisdiction of the State Energy Commission apply only to new nuclear power plants proposed to be constructed and operated *within California*. Cal. Pub. Res. Code § 25500. The Act does not prevent or authorize the Commission to prevent a California utility from building a new nuclear power plant *outside* the state, whatever economic risk there may be because of a potential "clog in the nuclear fuel cycle." If the California Legislature had intended the State Energy Commission to make decisions respecting economic feasibility of electric power plants, the Warren-Alquist Act and the 1976 Nuclear Laws would surely have

---

[5]Pursuant to Section 25524.2, the California Legislature may review, disaffirm and declare void a State Energy Commission finding that a technology or means for the disposal of high-level nuclear waste has been developed, has been approved by the United States, and exists. Nothing in the statute suggests that the Legislature's action is to be based on economic rather than radiological safety considerations.

[6]Respondents claim otherwise, relying upon a small segment of a report ("the Reassessment") prepared by the California Assembly committee that drafted the Nuclear Laws, and upon the declaration of former Assemblyman Charles Warren, who was chairman of the committee at the time. The Reassessment read as a whole is inconclusive as to the motivation for enactment of the 1976 Nuclear Laws. Moreover, it was not written until after the Nuclear Laws had passed the Assembly and while they were pending before the State Senate. Reassessment at 154. The Warren declaration was prepared after the commencement of this lawsuit and well after consideration and passage of the Nuclear Laws. Post-enactment statements by legislators are neither competent nor relevant in determining legislative intent. *Montana Power Co. v. EPA*, 608 F.2d 334, 353 n. 36 (9th Cir. 1979); *Selman v. United States*, 498 F.2d 1354, 1359 n. 6 (Ct. Cl. 1974). There is, therefore, no credible evidence to support the claim that enactment of the Nuclear Laws was motivated by economic rather than radiological safety concerns.

been made applicable regardless of where a new power plant was built by a California utility.

Respondents refer to Section 25511 of the Warren-Alquist Act as supposed proof that the Act is concerned not with the safety of using nuclear fuel but rather the economic feasibility of doing so. A poorer example could hardly have been chosen. Section 25511 shows that the Warren-Alquist Act and its 1976 amendments were intended to authorize and direct the State Energy Commission to regulate the very aspects of a nuclear power plant that are regulated by the NRC and for the same purpose. Section 25511 provides in pertinent part:

> The commission shall review the factors related to safety and reliability of the facilities at each of the alternative sites designated in the notice. In addition to other information requested of the applicant, the commission shall, in determining the appropriateness of sites and related facilities, require detailed information on proposed emergency systems and safety precautions, plans for transport, handling and storage of wastes and fuels, proposed methods to prevent illegal diversion of nuclear fuels, special design features to account for seismic and other potential hazards, proposed methods to control density of population in areas surrounding nuclear powerplants, and such other information as the commission may determine to be relevant to the reliability and safety of the facility at the proposed sites. . . .

As the United States has pointed out, it requires "sleight of hand" for respondents to advance the claim that the State Energy Commission's responsibility to regulate "emergency systems and safety precautions," "illegal diversion of nuclear fuels," "plans for transport handling and storage of wastes" and "special design features to account for

. . . hazards'' is evidence that the Commission is engaged only in ''traditional'' economic regulation of power plants.

The conclusion that the Nuclear Laws are not concerned with economics is fortified when they are analyzed in the context of California's regulatory scheme in respect of public utilities. The Nuclear Laws do not mention the economics of nuclear power plants. Nor would they grant regulatory power to the State Energy Commission if that was their purpose. It is the California Public Utilities Commission (''CPUC''), operating under the California Public Utilities Code, which is authorized and responsible to determine, on economic grounds, whether a nuclear power plant should be constructed. The *amicus* brief filed here by the CPUC asserts, correctly, that it alone has jurisdiction over the service, rates and charges established by California public utilities. Thus, the CPUC must issue a certificate of public convenience and necessity pursuant to California Public Utilities Code § 1001 before any new power plant can be built, including a nuclear facility. The CPUC has articulated its obligations in this regard as follows:

> . . . one of the important benefits, both to the utility and the public, of the certification procedure prescribed by Section 1001 of the Public Utilities Code is the Commission's review of the adequacy of proposed facilities, the economic feasibility of the proposed operation, and the financial resources of the utility, prior to the construction of facilities by the utility and dependency on such facilities by the public. It is more economical to install an adequate system at the onset than to correct deficiencies at a later date.

Re Wilbur and Mary Stark, 67 Cal. P.U.C. 632, 633 (1967).[7] Section 25518.5 of the Warren-Alquist Act encourages concurrent initiation of CPUC proceedings with State Energy Commission proceedings in respect of a proposed new electric power plant and Sections 25514.3 and 25519(i) require the State Energy Commission to look to the CPUC for the "economic, financial, rate, system reliability, and service implications" elements of state regulation.

Further evidence that the California Legislature considers the CPUC, not respondent Commission, as responsible for making determinations respecting the economic feasibility of electric power plants is found in California Assembly Bill No. 3242, enacted in 1982 and effective January 1, 1983, which amended the California Public Utilities Code to broaden CPUC regulation of economic and cost matters affecting power plants. The Bill adds Sections 1003, 1003.5 and 1093, among others, to the California Public Utilities Code. Section 1003(c) requires applicants to supply to the CPUC, in connection with an application for a new power plant (nuclear or non-nuclear): "An appropriate cost estimate, including preliminary estimates of the costs of financing, construction, and operation, *including fuel*, maintenance, and dismantling or inactivation after the useful life of the plant, line, or extension." (Emphasis added.) Section 1003(e) requires submission of a "cost control plan" and Section 1093(a) calls for a construction project board which

---

[7]The concern expressed by respondents regarding the cost acceptability of nuclear power plants ignores the uncontradicted finding of the District Court that petitioner PGandE must reduce substantially its reliance on oil and natural gas to generate electric power, that the only comparable alternatives are coal and nuclear, that coal plants cannot be built in California for air quality reasons, and that nuclear power plants can produce electric power at lower cost to ratepayers than coal-fired plants. (District Court Finding 14, A. 72.)

shall conduct necessary "economic evaluations." Because the traditional role of economic regulation of public utilities has been preserved to the CPUC, the 1976 Nuclear Laws cannot be seen as a vehicle for such regulation.

Petitioners do not challenge any of the regulatory functions of the CPUC or any provision of the California Public Utilities Code. Respondents and their *amici* assert that if Sections 25524.1(b) and 25524.2 are held invalid there will be a "regulatory vacuum" and nuclear power plants in California will go unregulated in various respects. The claim is wrong; California's regulatory scheme respecting such plants will remain in place, shorn only of its preempted elements.

IV.

SECTIONS 25524.1(b) AND 25524.2 WOULD BE INVALID EVEN IF THEY WERE CONCERNED WITH THE ECONOMIC FEASIBILITY OF NUCLEAR POWER PLANTS.

As we have shown, the enactment of Sections 25524.1(b) and 25524.2 was motivated by concern about the radiological hazards created by spent nuclear fuel, *not* about the economic feasibility of nuclear power plants. But it would not matter if the opposite were true. As this Court held in *Perez v. Campbell*, 402 U.S. 637, 651-652 (1971), a state's motives for enacting preempted legislation are immaterial. The key issue in a preemption case is not *why* the state acted but whether it has intruded upon an area of exclusive federal regulation of the subject matter involved. This principle applies as much to the construction and operation of nuclear power plants as to any other subject. Thus, in *Train v. Colorado Public Interest Research, Inc.*, 426 U.S. 1, 16 n. 12 (1976), this Court declared that a state's regulatory program must be compatible with the NRC's regulatory program and that the States "are precluded from playing any role in several significant areas of regulation" insofar

as nuclear power plants are concerned. A State cannot enter those forbidden areas of regulation through the back door, by asserting that its regulatory motive is related to economics. Regulation of the construction and operation of nuclear power plants, including the interim storage of nuclear fuel and the permanent disposal of nuclear waste, is reserved exclusively to the federal government by Section 274(c) of the Atomic Energy Act, 42 U.S.C. § 2021(c). California may not invade this sphere of federal regulatory jurisdiction no matter what its motive for doing so may be.

Sections 25524.1(b) and 25524.2 also are invalid because they frustrate the federal purpose of encouraging nuclear power plant development under strict federal supervision and they conflict with that supervision by authorizing the State Energy Commission to make regulatory decisions different from those of the NRC. The federal government has fully occupied the field of regulating interim storage of nuclear fuel and permanent disposal of nuclear waste. Petitioners' Brief at 5-7. Recent federal legislation confirms that the federal government has accepted responsibility in this area and intends to meet that responsibility.[8] Federal regulation of interim fuel storage does not require full core reserve storage capacity while Section 25524.1(b) does.[9] Federal regulation of the permanent disposal of nuclear waste allows new construction to continue until such a method is put in place; Section 25524.2 vetos this NRC decision in California by prohibiting such construction until the method is in operation. The conflict between the two regulatory schemes is obvious. The conflict frustrates the

---

[8]H.R. 3809, Nuclear Waste Policy Act of 1982 as passed by the Senate December 20, 1982 (see pages S 15621-S 15670 of Vol. 128 of the Congressional Record, December 20, 1982) and agreed to without change by the House of Representatives on December 20, 1982.

[9]Respondents' Brief at 54 n. 92.

federal program in California. Sections 25524.1(b) and 25524.2 are therefore invalid regardless of California's motivation for their enactment.

V.

THE REGULATORY JURISDICTION RESERVED TO THE FEDERAL GOVERNMENT BY SECTION 274 OF THE ATOMIC ENERGY ACT IS NOT LIMITED TO RADIATION HAZARDS BUT EXTENDS TO ALL ASPECTS OF THE CONSTRUCTION AND OPERATION OF NUCLEAR POWER PLANTS.

Respondents would have this Court interpret Section 274 of the Atomic Energy Act, 42 U.S.C. § 2021, as drawing a line which divides regulation of the construction and operation of nuclear power plants into two mutually-exclusive categories: regulation *only* of radiological hazards by the federal government, regulation of *all other* matters by the States. Of course, the statute does not say that, nor could it rationally do so. Virtually every aspect of the construction and operation of such complex facilities is so intertwined with radiation safety that Congress could only have concluded, as it did, that all but the most peripheral aspects thereof are to be regulated exclusively by the NRC. See Petitioners' Brief at 24-27.

In thus preempting for exclusive federal control virtually the entire field of regulation of nuclear power plant construction and operation, Congress sought to protect and advance several interrelated national concerns and interests: national security, radiological safety, and the national economic benefits which Congress hopes to realize through private participation in nuclear power plant development. Section 274, enacted in 1959 for the very purpose of defining the respective spheres of federal and state power over nuclear power plants, authorized *limited* state regulation of nuclear materials as involved in small enterprises and ex-

pressly preserved exclusive federal regulation of nuclear power plants. In doing so, Congress acted upon the perception that its purpose of simultaneously promoting nuclear power development and protecting the public health and safety required that there be single, uniform, federal control with respect to nuclear power plants.

It was frequently observed during the hearings on the 1959 amendment, Section 274, that nuclear reactors are complex, requiring highly expert regulation for safety purposes, and that there is a special national interest in the development of nuclear power plants — both factors militating in favor of unified federal control. The possibility of concurrent federal-state regulation in this complex area was repeatedly rejected, as potentially hazardous to the public safety and as threatening retardation of the development of nuclear power plants. See 1959 Hearings 275, 290, 291, 302, 315, 389, 400, 489. The Joint Committee's Report on Section 274 contained the following statement regarding the approach Congress chose:

> . . . The committee recognizes the importance of the testimony before it by numerous witnesses of the dangers of conflicting, overlapping, and inconsistent standards in different jurisdictions, to the hindrance of industry and jeopardy of public safety.

Senate Report No. 870, 86th Cong., 1st Sess., at 9.

In the light of this legislative action by Congress, Section 25524.1(b) of the Warren-Alquist Act is preempted by Section 274, whatever its alleged purpose, because Congress obviously did not contemplate state regulation of so important an aspect of the construction and operation of nuclear power plants as the interim storage of spent fuel. Section 25524.2 of the Warren-Alquist Act is also preempted because by the Atomic Energy Act, *and especially the 1959 amendment*, Congress has made clear its continuing purpose

to have single, uniform, federal control with respect to nuclear power plants *and* with respect to the storage and disposal of nuclear wastes.

VI.

SECTION 271 OF THE ATOMIC ENERGY ACT DOES NOT VALIDATE SECTIONS 25524.1(b) AND 25524.2.

Respondents assert that Sections 25524.1(b) and 25524.2 are valid by reason of Section 271 of the Atomic Energy Act, 42 U.S.C. § 2018, which recognizes traditional authority of the states over the sale and distribution of electricity. This assertion is unfounded. Section 271 does not address, much less confirm, any right of the State to regulate the construction and operation of nuclear power plants, including regulation of interim storage of spent fuel and permanent disposal of high-level nuclear waste.

In their analysis of Section 271, respondents rely upon *Public Service Co. v. NRC*, 582 F.2d 77 (1st Cir.), *cert. denied*, 439 U.S. 1046 (1978), wherein the Court of Appeals for the First Circuit held that the NRC had the authority to re-route transmission lines tying a proposed nuclear power plant to the transmission grid and declared that Section 271 did not bar such *NRC* activity. In support of its decision, the Court of Appeals explained the reason for the enactment of Section 271 as follows:

> In light of the prior monopolistic control by the federal government over all aspects of nuclear energy, there was concern by certain senators that the new grant of authority to private industry to develop nuclear power for generation of electricity might mean that the traditional regulatory bodies would be displaced. There was particular worry that the Federal Power Commission might be ousted from *regulating electricity* produced by nuclear energy.

582 F.2d at 84 (emphasis added). Thus, the Court of Appeals recognized that — as argued by petitioners in their initial brief (at 31-32) — the purpose of Section 271 is to permit traditional state regulation of the sale and distribution of *electricity* after it is generated, regardless of whether it is generated by a nuclear power plant or a conventional plant. In making this point, the Court quoted the Senate debates:

> Mr. Hickenlooper. What section 271 does is to make clear that this act does not interfere in any way with the jurisdiction of the Federal Power Commission over such activities, or with State agencies *where they have jurisdiction*, or with local agencies where they have jurisdiction.
>
> It is not an authority given in a negative way. It is a positive negation of any intent by this statute to interfere with the existing laws and the existing authorities, State and Federal, *that have to do with electricity*. 100 Cong. Rec. 12197 (1954).

582 F.2d at 85, n. 14 (emphasis added).

When Section 271 is considered in the context of the 1954 Act and its own legislative history, it is clear that this provision was not intended to grant the States regulatory authority over the construction and operation of nuclear power plants, the interim storage of spent nuclear fuel, or ultimate disposal of high-level nuclear waste. All that Section 271 does is make clear that the Atomic Energy Act does not affect existing federal and state regulation of *electricity*. Accordingly, Section 271 is irrelevant to the issues before this Court.

VII.
CONCLUSION.

The validity of Sections 25524.1(b) and 25524.2 of the Warren-Alquist Act will never be determined by this Court unless it is determined now. Given the California regulatory

scheme, no utility can risk the expense of initiating a nuclear power plant project if the Nuclear Laws and the Warren-Alquist Act are or may be valid as applied to such a project. The challenged sections of the Warren-Alquist Act *now* preclude petitioners from building new nuclear power plants in California for, as held by the Court of Appeals below, "the challenged statutes stand as an absolute barrier to the construction of the proposed plants, and . . . the utilities intend to proceed if the statutes are invalidated. (A. 18-19.) Petitioners' challenge raises purely legal issues concerning whether California can enact and enforce such legislation. The challenge presented here is ripe for judicial review.

Sections 25524.1(b) and 25524.2 are preempted by and in conflict with the Atomic Energy Act because they prohibit and regulate the construction and operation of nuclear power plants in ways and for purposes which conflict with the Atomic Energy Act and frustrate the federal purpose of encouraging and fostering the development of nuclear power under strict, comprehensive and uniform federal regulation.

For these reasons, Sections 25524.1(b) and 25524.2 of the Warren-Alquist Act should be adjudged both ripe for review by this Court and invalid because preempted by and in conflict with the Atomic Energy Act. This case should then be remanded to the Court of Appeals for reconsideration of its other rulings in light of this Court's opinion.

Respectfully submitted,

JOHN R. MCDONOUGH,
HOWARD B. SOLOWAY,
Counsel of Record,
BALL, HUNT, HART, BROWN AND BAERWITZ,
Attorneys for Petitioners.

Of Counsel:
ROBERT OHLBACH,
RICHARD F. LOCKE,
DAN GRAYSON LUBBOCK,
JOHN R. BURY,
CHARLES R. KOCHER,
JAMES A. BEOLETTO.

Amicus Brief

1

Office - Supreme Court, U.S.
FILED
NOV 18 1982
ALEXANDER L. STEVAS,

No. 81-1945

IN THE

Supreme Court of the United States

October Term, 1982

PACIFIC GAS AND ELECTRIC CO., and
SOUTHERN CALIFORNIA EDISON CO.,

Petitioners,

v.

STATE ENERGY RESOURCES CONSERVATION &
DEVELOPMENT COMMISSION, *et al.*,

Respondents.

On Writ of Certiorari to the United States Court of Appeals for the Ninth Circuit

BRIEF *AMICUS CURIAE* SUBMITTED BY THE STATES OF ALASKA, ARIZONA, ARKANSAS, HAWAII, KANSAS, LOUISIANA, MINNESOTA, MISSISSIPPI, MONTANA, NEVADA, NEW YORK, OHIO, OKLAHOMA, SOUTH CAROLINA, VERMONT, WEST VIRGINIA AND WYOMING IN SUPPORT OF RESPONDENTS

For the State of New York

ROBERT ABRAMS
Attorney General
PETER H. SCHIFF
Acting Attorney In Chief
Appeals and Opinions

EZRA I. BIALIK*
Assistant Attorney General
Environmental Protection Bureau
2 World Trade Center
New York, New York 10047
(212) 488-7565

* *Counsel of Record*

November 1982

(List of Counsel continued inside)

For the State of Alaska
WILSON L. CONDON
Attorney General
DOUGLAS K. MERTZ
Assistant Attorney General
Pouch K, State Capitol
Juneau, Alaska 99811

For the State of Arizona
ROBERT K. CORBIN
Attorney General
ANTHONY B. CHING
Solicitor General
1275 West Washington Street
Phoenix, Arizona 85007

For the State of Arkansas
JOHN STEVEN CLARK
Attorney General
Justice Building
Little Rock, Arkansas 72201

For the State of Hawaii
TANY S. HONG
Attorney General
MICHAEL A. LILLY
First Deputy Attorney General
State Capitol
Honolulu, Hawaii 96813

For the State of Kansas
ROBERT T. STEPHAN
Attorney General
ROBERT VINSON EYE
Assistant Attorney General
BRIAN J. MOLINE
General Counsel, State Corporation Commission
Topeka, Kansas

For the State of Louisiana
WILLIAM J. GUSTE, JR.
Attorney General
KENDALL L. VICK
Assistant Attorney General
2-3-4 Loyola Building
New Orleans, Louisiana 70112

For the State of Minnesota by its Attorney General and its Minnesota Pollution Control Agency
WARREN SPANNAUS
Attorney General
JOCELYN F. OLSON
Special Assistant Attorney General
1935 West County Road B-2
Roseville, Minnesota 55113

For the State of Mississippi
BILL ALLAIN
Attorney General
MACK CAMERON
Special Assistant Attorney General
Box 220
Jackson, Mississippi 39205

For the State of Montana
MIKE GREELY
Attorney General
MIKE MCGRATH
Assistant Attorney General
State Capitol
Helena, Montana 59620

For the State of Nevada
RICHARD H. BRYAN
Attorney General
LARRY STRUVE
Chief Deputy Attorney General
Capital Complex
Heroes Memorial Building
Carson City, Nevada 89710

For the State of Ohio
WILLIAM J. BROWN
Attorney General
E. DENNIS MUCHNICKI
Assistant Attorney General
30 East Broad Street
Columbus, Ohio 43215

For the State of Oklahoma
JAN ERIC CARTWRIGHT
Attorney General
SARA J. DRAKE
Assistant Attorney General
State Capitol
Oklahoma City, Oklahoma 73105

For the State of South Carolina
DANIEL R. MCLEOD
Attorney General
RICHARD P. WILSON
Assistant Attorney General
Rembert C. Dennis Building
P.O. Box 11549
Columbia, South Carolina 29211

For the State of Vermont
JOHN J. EASTON, JR.
Attorney General
MERIDETH WRIGHT
Assistant Attorney General
109 State Street
Montpelier, Vermont 05602

For the State of West Virginia
CHAUNCEY H. BROWNING
Attorney General
ROBERT R. RODECKER
General Counsel, Public Service
Commission of West Virginia
950 Kanawha Boulevard East
Charleston, West Virginia 25301

For the State of Wyoming
STEVEN F. FREUDENTHAL
Attorney General
WALTER PERRY III
Senior Assistant Attorney General
Cheyenne, Wyoming 82002

Questions Presented

1. Has Congress, through the Atomic Energy Act, established the objective of forcing nuclear plants upon States unwilling to accept the grave economic risks that accompany such plants?

2. Has Congress expressed such a strong preference for nuclear power as to preclude States from choosing to meet their energy needs by using coal, conservation and/or renewable energy sources—which themselves have been supported and promoted by Congress?

TABLE OF CONTENTS

PAGE

Questions Presented 1

Interest of *Amici* States 1

Summary of Argument 13

Argument

I. States Have Ample Authority to Regulate Public Utilities for Protection of the Ratepayers and the Effectuation of Other State Policies 13

II. The Atomic Energy Act Does Not Prevent States from Deciding Whether Nuclear Plants May Be Constructed Within Their Borders 16

A. The Atomic Energy Act Itself Does Not Preclude State Regulation of the Type Enacted by California, and Expressly Recognizes Continuing State Authority Over Nuclear Plants 16

B. Past Interpretations of The Atomic Energy Act by the AEC Support the Conclusion That NRC Authority Is Limited, and That States Retain Broad Power to Regulate Nuclear Power Plants—Including the Issue of Whether New Plants Should Be Built 21

III. There Is No Congressional Objective of Forcing States to Accept New Nuclear Plants if Then Can Meet Their Energy Needs With Coal, Conservation or Other Modes Approved by Congress 26

PAGE

A. The Atomic Energy Act Itself Does Not Express a Congressional Policy That Nuclear Plants Should Be Built 26

B. Legislation Enacted Since Passage of The Atomic Energy Act Demonstrates That Nuclear Power Has Been De-emphasized by Congress, and That Conservation Along With Other Forms of Energy Have Been Promoted 27

Conclusion 34

TABLE OF AUTHORITIES

PAGE

Court Cases:

Central Hudson Gas & Electric Corp. v. Public Service Commission of New York, 447 U.S. 557 (1980) 13
Commonwealth Edison Co. v. Montana, 453 U.S. 609 (1981) 33
Consolidated Edison Co. v. Public Service Commission of New York, 447 U.S. 530 (1980) 14

Edelman v. Jordan, 415 U.S. 651 (1974) 19

Frost v. Corporation Commission, 278 U.S. 515 (1929) 13

Jackson v. Metropolitan Edison Co., 419 U.S. 345 (1974) 14

Kelly v. Washington, 302 U.S. 1 (1937) 20

Mandel v. Bradley, 432 U.S. 173 (1977) 19
Marshall v. Consumers Power Co., 65 Mich. App. 237, 237 N.W. 2d 266 (Mich. 1976) 22
Maun v. United States, 347 F.2d 970 (9th Cir. 1965) 17
Merrill Lynch, Pierce, Fenner & Smith v. Ware, 414 U.S. 117 (1973) 33

New York Dept. of Social Services v. Dublino, 413 U.S. 405 (1973) 20
New York Telephone Co. v. New York State Dept. of Labor, 440 U.S. 519 (1979) 34
Northern States Power Company v. Minnesota, 447 F.2d 1143 (8th Cir. 1971), *aff'd mem.* 405 U.S. 1035 (1972) 5, 19, 20, 30, 32

Silver v. New York Stock Exchange, 373 U.S. 341 (1963) 33

PAGE

State of New Hampshire v. Atomic Energy Commission, 406 F.2d 170 (1st Cir.), *cert. denied*, 395 U.S. 962 (1969) 21

Vermont Yankee Nuclear Power Corp. v. NRDC, 435 U.S. 519 (1978) 15, 23

Administrative Cases:

Matter of Consolidated Edison Company of New York, Inc., 7 NRC 31 (1978) 22, 24, 30
Matter of Consumers Power Company, 7 NRC 155 (1978) 23
Matter of Long Island Lighting Company, 9 NRC 51 (1979) 23
Matter of Rochester Gas & Electric Corporation, 8 NRC 383 (1978) 24
Matter of Southern California Edison Co., 7 AEC 37 (1974) 24
Matter of Susquehanna Steam Electric Station Units 1 & 2, CCH Nuc. Reg. Rptr. ¶30,394 (1979) 24
Matter of Vermont Yankee, 4 AEC 75 (1968) 21
Matter of Wisconsin Michigan Power Co., 4 AEC 3 (1967) 21

Statutes:

Atomic Energy Act, 42 U.S.C. § 2011, *et seq.* ..... *passim*
42 U.S.C. § 2011 26
42 U.S.C. § 2012 26
42 U.S.C. § 2013 26
42 U.S.C. § 2018 ..... 16, 17
42 U.S.C. § 2021(b) 18
42 U.S.C. § 2021(c) 18, 19
42 U.S.C. § 2021(g) 18, 25
42 U.S.C. § 2021(k) 18, 19

PAGE

Clean Air Act Amendments of 1977
42 U.S.C. § 7416 29
42 U.S.C. § 7422 29
42 U.S.C. § 7602(g) 29
Department of Energy Organization Act of 1977, 42 U.S.C. § 7101, *et seq.* 29
Energy Policy and Conservation Act of 1975, 42 U.S.C. § 6201, *et seq.* 28
Energy Reorganization Act of 1974
42 U.S.C. § 5801, *et seq.* 27
42 U.S.C. § 5811 27
42 U.S.C. § 5813 27
42 U.S.C. § 5841 27
Energy Tax Act of 1978, 26 U.S.C. § 44C 31
Federal Nonnuclear Energy Research and Development Act of 1974, 42 U.S.C. § 5901, *et seq.* 28
National Energy Conservation Policy Act of 1978, 42 U.S.C. § 8201, *et seq.* 31
National Environmental Policy Act ("NEPA"), 42 U.S.C. § 4321, *et seq.* 22
Powerplant and Industrial Fuel Use Act of 1978, 42 U.S.C. § 8301, *et seq.* 31
Price-Anderson Act, 42 U.S.C. § 2210 26
Public Utility Regulatory Policies Act of 1978, 16 U.S.C. § 2601, *et seq.* 32
42 U.S.C. § 6803 32
42 U.S.C. § 7151(a) 27
42 U.S.C. § 7371 32
42 U.S.C. § 8701 32
42 U.S.C. § 8837 32
42 U.S.C. § 9001 32
42 U.S.C. § 9201 32
Alaska Statute 18.45.025 2
Arkansas Stat. Ann. § 73-276.1 3
Arkansas Stat. Ann. § 73-276.3 3

PAGE

Arkansas Stat. Ann. § 73-276.9 3
Cal. Pub. Res. Code § 25524.1(b) 1, 34
Cal. Pub. Res. Code § 25524.2 ..... 1, 20, 34
Kansas Statutes Annotated, ch. 66, §§ 1,158-1169c 3
Minn. Stat. 115.03 4
Minn. Stat. 116C.51-116C.69 4
Minn. Stat. 116D.04 4
Minn. Stat. 116.081 4
Minn. Stat. 116H.13 4
Montana MCA 75-20-201 7
Montana MCA 75-20-1203 7
Montana MCA 75-20-1204 7
Montana MCA 75-3-302 7
New York Energy Law § 5-110 8
New York Public Service Law § 140, *et seq.* 8
Ohio Revised Code, ch. 4901 9
Ohio Revised Code, ch. 4906 9
South Carolina Code of Law § 48-1-100 10
South Carolina Code of Law § 58-33-10 10
Vermont S. A., Vol. 30, § 202 11
Vermont S. A., Vol. 30, § 248 11
West Virginia Code § 24-1-1(a)(3) 11
West Virginia Code § 24-1-1(b) 11
West Virginia Code § 24-2-11 11

Miscellaneous:

100 Cong. Rec. 11689 (1954) 17
Senate Report 93-980, 93d Cong., 2d Sess. (1974) 28

No. 81-1945

IN THE

Supreme Court of the United States

October Term, 1982

PACIFIC GAS AND ELECTRIC CO., and
SOUTHERN CALIFORNIA EDISON CO.,
Petitioners,

v.

STATE ENERGY RESOURCES CONSERVATION &
DEVELOPMENT COMMISSION, *et al.*,
Respondents.

On Writ of Certiorari to the United States Court of Appeals for the Ninth Circuit

BRIEF *AMICUS CURIAE* SUBMITTED BY THE STATES OF ALASKA, ARIZONA, ARKANSAS, HAWAII, KANSAS, LOUISIANA, MINNESOTA, MISSISSIPPI, MONTANA, NEVADA, NEW YORK, OHIO, OKLAHOMA, SOUTH CAROLINA, VERMONT, WEST VIRGINIA AND WYOMING IN SUPPORT OF RESPONDENTS

Interest of *Amici* States

This brief *amicus curiae* is submitted by seventeen States to urge that California Pub. Res. Code §§ 25524.1(b) and 25524.2 are not preempted by the Atomic Energy Act. The interests of the *amici* States are set forth below.

Alaska: The State of Alaska currently has no operating nuclear power plants, but Alaska's legislature has gone firmly on record in favor of State authority over siting of facilities relating to nuclear power. Since statehood Alaska has had some degree of oversight of nuclear power development, and in 1981 the legislature passed a revision of Alaska's law on nuclear facility siting. Under the revision, Alaska Statute 18.45.025, construction of nuclear plants requires a permit which must be ratified by both houses of the legislature; the site of such facilities must also be approved by the legislature.

This program of State oversight is an essential element in Alaska's comprehensive planning for energy alternatives available to the State. Alaska is blessed with tremendous energy resources in its oil and gas and coal deposits and its hydropower potential, but at the same time is unusually dependent on fuels brought into the State. Development of stable and cost-effective sources of power within Alaska's borders is a complex and delicate process; the economics of energy development in this isolated State require careful and comprehensive planning, without which few projects to develop the State's natural energy resources would be economically sound. If Alaska cannot regulate the introduction of nuclear power into the State, then Alaska's efforts at comprehensive energy planning and at economical development of in-state energy resources are in extreme jeopardy.

Arizona: A nuclear plant is now under construction in Arizona. The State is vitally interested in its right to regulate whether nuclear plants are built in the State, without being preempted by the Atomic Energy Act.

Arkansas: Under Arkansas law the State Public Service Commission exercises utility ratemaking authority and administers the State's power plant siting law, which covers any major electric generating facility proposed for con-

struction. This law regulates the need for, location, construction, operation and economic impact of major utility facilities, including nuclear power plants. It is the express purpose of the Arkansas Utility Facility Environmental and Economic Protection Act of 1973, as amended (Ark. Stat. Ann. § 73-276.1, *et seq.* Repl. 1979) to minimize any adverse effect upon the environment; to minimize the economic cost of obtaining reliable, clean, safe and adequate energy supplies, and to encourage the development of alternative energy technologies. Under the Act a facility may not be constructed without a certificate of environmental compatibility and public need from the Commission. *Id.* § 73-276.3. The specific criteria to be considered prior to issuance of a certificate include need, environmental impact, energy efficiency, site, method of financing and overall economic impact. *Id.* § 73-276.9.

Hawaii: Hawaii has no nuclear power plants at this time. The State's constitution prohibits construction of such plants without the concurrence of both houses of the Legislature. Hawaii is currently using various alternative means for producing electricity, including solar, wind and geothermal.

Kansas: The outcome of this litigation will have a direct impact on the validity of the Kansas Electric Generation Facility Siting Act (Kansas Statutes Annotated, Chapter 66, §§ 1,158-1169c). This act requires electric utilities in Kansas to obtain a permit from the Kansas Corporation Commission prior to commencing site preparation or construction of any electric generation facility. This permit process is required irrespective of the fuel mode the electric utility intends to utilize in the proposed facility. Moreover, the permit process enables interested State government agencies and the general public to engage in an informed evaluation and analysis to determine, *inter alia*, whether such proposed facility is needed and affordable and if the proposed site is appropriate.

Louisiana: The State of Louisiana has an interest in the outcome of this case. Four nuclear power plants are currently in various stages of licensing to provide power to Louisiana citizens. Two plants are to be located in St. Francisville, Louisiana. One is located in Taft, Louisiana, and the fourth, Grand Gulf, is located in Mississippi but it is anticipated that a large proportion of its ratepayers are located in Louisiana.

Minnesota: Minnesota's interest arises from the fact that it has a comprehensive body of law regulating the construction and operation of any large electric generating facility in the State, including a nuclear power plant. This law requires the proposer of any such facility to obtain three major governmental approvals before the facility can be built: (1) a certificate of need from the Commissioner of Energy, Planning and Development, (2) a certificate of site compatibility from the Minnesota Environmental Quality Board, and (3) air and water pollution control permits from the Minnesota Pollution Control Agency (hereinafter "MPCA"). Minn. Stat. §§ 116H.13, 116C.51-116C.69, 115.03, 116.081 (1980). In addition, Minn. Stat. § 116D.04 subd. 1 (1980) and the rules of the Minnesota Environmental Quality Board (6 MCAR § 3.025G) require that construction of such a facility be preceded by the preparation of an environmental impact statement. Finally, Minnesota's Environmental Policy Act (hereinafter "MEPA") prohibits issuance of any permit where construction and operation of the proposed facility "is likely to cause pollution, impairment, or destruction of the air, water, land or other natural resources located within the state, so long as there is a feasible and prudent alternative . . . ." Minn. Stat. § 116D.04 subd. 6 (1980).

Minnesota's approach to the regulation of the construction of large electric generating facilities in the State entails close scrutiny of the State's need for additional

electric generating capacity as well as in-depth study of the appropriate fuel type, siting and design of the proposed facility. MEPA's requirement that all "feasible and prudent" alternatives to the proposed facility be considered applies not only to the siting and design questions but also to the issue of whether additional electric generating capacity is needed in the State. Thus, if growth in the demand for electricity in the State can be met by alternative supply options having lesser adverse environmental impacts, MEPA would require that no certificate of need be granted for the proposed facility.

Minnesota seeks affirmance of the decision of the Ninth Circuit because it supports the validity of Minnesota's comprehensive power plant regulatory program as applied to proposed nuclear plants.

The Minnesota Pollution Control Agency, which is also *amicus curiae* herein, is an agency of the State of Minnesota. It is charged with regulatory responsibilities in the environmental areas of air quality, water quality, solid and hazardous waste, and noise pollution control. *See* Minn. Stat. chs. 115, 116 and 116F (1980).

The MPCA also has a present interest in the regulation of nuclear power plants located in Minnesota.* The MPCA has issued National Pollutant Discharge Elimination System ("NPDES") and State Disposal System ("SDS") permits to Northern States Power Company for water discharges from its existing nuclear power plants, Monticello Nuclear Generating Plant (hereinafter "Monticello") and

* In addition to its present interest in the subject matter of this litigation, the MPCA has historically exhibited its interest in the authority of the State to regulate nuclear power plants. It was a permit issued by the MPCA to Northern States Power Company that resulted in the decision in the case of *Northern States Power Company* v. *Minnesota*, 447 F.2d 1143, *aff'd mem.*, 405 U.S. 1035 (1972), upon which the District Court relied in this case in order to make a finding of implied preemption. *See* Memorandum Decision (March 6, 1979) at 12.

Prairie Island Nuclear Generating Plant ("Prairie Island"). The MPCA is now in the process of developing air emission facility permits establishing limitations upon radionuclide emissions to the air from Monticello and Prairie Island pursuant to its authority to adopt air emission standards granted to the States by Congress in the Clean Air Act Amendments of 1977. Any nuclear power plants proposed to be built in the State in the future would be required to obtain from the MPCA a NPDES and SDS permit as well as an air emission facility permit. Thus, the MPCA has an interest in the precedent the Court's decision in this case may establish with respect to State regulation of nuclear power plants.

Mississippi: The State of Mississippi has an interest in the Court's determination of the preemptive scope of the Atomic Energy Act, 42 U.S.C. §§ 2011, *et seq.* The Mississippi Public Service Commission generally regulates utilities, including the Grand Gulf Nuclear Power Plant, through the issuance of certificates of convenience and necessity. The Commission on Natural Resources regulates the discharge of any liquid, gaseous, solid or other substance or heat into the waters of the State, including fluorides and other non-radioactive chemicals which may be located in discharged effluents. The Mississippi Department of Health regulates the construction of any public water supply systems that may be necessary to supplement a nuclear power plant operation.

The Department of Health also regulates the actual transportation of nuclear waste through the State. The Mississippi Emergency Management Agency has permitting authority for the transportation of nuclear waste through Mississippi. The Energy and Transportation Board has the authority to initiate, by permit, activities that would lead to studies of geological formations for their suitability for a nuclear waste repository in Mississippi, a

subject of great concern to the people and elected officials of Mississippi.

Montana: Montana has a significant interest in the outcome of this litigation. Montana has established statutory guidelines, principally through the initiative process, that must be followed before a nuclear facility can be built. In November 1978, the voters of Montana approved Initiative No. 80, a measure which established safeguards and guidelines for the construction and operation of any nuclear facility within the borders of Montana. The initiative amended Montana's Major Facility Siting Act, Title 75, chapter 20, Montana Code Annotated. Under the provisions of the siting act, a facility cannot be constructed without a certificate of environmental compatibility and public need issued by the Board of Natural Resources, a board of Montana citizens appointed by the Governor. § 75-20-201, MCA. The Act establishes specific criteria that must be satisfied before the Board is entitled to issue a certificate.

The initiative requires that the matter of construction of a nuclear facility must be submitted to the voters of the State for approval. § 75-20-201, MCA. The initiative further requires that prior to the construction of a nuclear facility the effectiveness of all safety systems must be demonstrated to the satisfaction of the Board of Natural Resources; a plant owner must establish that radioactive materials and waste can be contained with no reasonable chance of escape; and a bond is required to pay for potential decommissioning or decontamination. § 75-20-1203, MCA. Finally the initiative requires an annual review and publication by the State of all evacuation plans in case of emergency. § 75-20-1204, MCA. Then, in 1980, the voters of Montana passed a second initiative regarding State regulation of the nuclear industry, Initiative 84. That enactment prohibits the disposal of most radioactive waste materials within the State of Montana. § 75-3-302, MCA.

Nevada: The statutes at issue in this case are exercises of traditional State regulation of public utilities. Unlike California and several of the other States, Nevada has no statute directed specifically to State regulation of nuclear power. Nevada is typical of States that have entrusted regulation of power plant construction by utilities to a public service commission. Nevada's Public Service Commission, in turn, is charged with determining the energy needs of the State. In recent years several utilities have sought to construct power plants within the State of Nevada. While no nuclear power plants presently exist in Nevada, it is highly conceivable that if demand for energy grows other utilities will seek to build plants in the State. Some of these proposed plants will likely be nuclear projects. This directly impacts the issue of energy needs in Nevada. The argument has been made in this case that the purpose of Congress in passing the Atomic Energy Act of 1954 was to foster and promote nuclear power, and that any State which tends to frustrate that purpose is preempted. This interpretation would interfere intolerably with Nevada's longstanding comprehensive regulatory scheme for public utilities.

New York: The State of New York now has five nuclear plants. Like California, New York requires State approval before a new power plant is built, whether the plant be nuclear, coal or oil-fired. New York Public Service Law, § 140, *et seq.* Pursuant to this scheme the State may reject proposed nuclear plants for a variety of economic, environmental or other reasons. New York also has authorized an Energy Planning Board to adopt a long-range energy master plan for meeting the State's future energy needs. New York Energy Law § 5-110. In 1980 the Board released a plan which contained a policy that no new nuclear plants be built in the State in the near future, because of the "need to develop a fully adequate national nuclear waste disposal program, and a need to clarify substantial uncertainties associated with economic, safety and regulatory issues re-

lated to the nuclear option." That policy has been challenged as violative of the Atomic Energy Act, in *Northern New York Section of the American Nuclear Society* v. *The New York State Energy Planning Board*, 80 Civ. 945 (N.D.N.Y.). An updated energy master plan for the State containing the same policy statement regarding new nuclear plants has been approved this year by the Energy Planning Board.

Ohio: The General Assembly of the State of Ohio has enacted legislation pursuant to its police power authority to regulate public utilities which are directly impacted by the Court's decision in this case. Chapter 4906 of the Ohio Revised Code creates the Ohio Power Siting Commission and requires electric utilities to obtain from the Commission a Certificate of Environmental Compatibility and Public Need prior to commencing construction of major utility facilities, including nuclear power plants. In exercising its authority over nuclear facilities the Commission has faced issues similar to those presented in this case. In a proceeding involving certification of the Erie Nuclear Generating Station, the Commission staff was forced to take the position that due to the uncertainty of the manner in which nuclear waste from the facility would be handled, the Commission was unable to make the finding of minimum environmental impact and that construction of the plant was consistent with the public interest, convenience and necessity as required by Chapter 4906.

The Public Utilities Commission of Ohio (PUCO), as created in Chapter 4901 of the Ohio Revised Code, has also found it necessary, pursuant to its ratemaking authority, to deal with the non-radiological safety aspects of nuclear power generation. Indeed, the Commission has pending before it a request for a rate increase to finance the construction of the Zimmer Nuclear Generating Station despite the inability of the utility to commence operation of the plant due to repeated failures to obtain approval from the

Nuclear Regulatory Commission. Thus, the PUCO is faced with addressing the question of the extent to which it should allow the utility to use the ratepayers to subsidize its failure to meet NRC standards.

Oklahoma: Oklahoma has an interest in the outcome of this litigation. In an order issued on January 15, 1982, the Oklahoma Corporation Commission (Oklahoma's utility regulatory commission) effectively stopped the Black Fox Nuclear Power Station project—Oklahoma's only nuclear power project. Stating that the Black Fox construction project "faces construction, regulatory and political risks, each of which impact the capital costs and construction scheduling associated with this project," the Corporation Commission concluded "that the Black Fox Nuclear Station project is no longer economically viable . . . and that expenditures made from and after the date of this Order in the furtherance of the Black Fox project, will be considered by us to be imprudently undertaken for Oklahoma jurisdiction ratemaking purposes." Application of Public Service Company, Cause No. 27068, Order No. 206560.

South Carolina: The State of South Carolina presently has four nuclear power generating units operating within its borders. One more unit is about to go on-line and five are in various stages of planning and construction. Like California, South Carolina requires State approval before a new major utility facility may be built, whether it be a nuclear, coal, or oil-fired power plant, through the issuance of a certificate of environmental compatibility and public convenience and necessity. Utility Facility Siting and Environmental Protection Act (Section 58-33-10, *et seq.*, of the 1976 CODE OF LAW OF SOUTH CAROLINA). State law also authorizes studies of anticipated environmental impacts and requires the procurement of appropriate State air and water pollution control permits. Section 48-1-100 of the 1976 CODE. Pursuant to that regulatory scheme, the State may reject proposed nuclear plants for a variety of

economic, environmental, or other reasons in the interest of protecting the environment of the State and the health, welfare and safety of its citizens.

Vermont: Vermont regulates the construction of electric generation facilities and requires a certificate of public good from the State Public Service Board prior to beginning site preparation or construction. (30 V.S.A. § 248(a)). The Board is the single agency charged with consideration of all relevant criteria, from need for the facility to effects on land use, air and water pollution as well as public health and safety. (30 V.S.A. § 248(b)). These criteria apply to proposed nuclear plants as they do to any electric generating plant. In 1975 the Legislature added § 248(c), which provides for legislative approval before the Board may issue a certificate of public good for the construction of a nuclear fission plant. In addition, the Vermont Department of Public Service is preparing an electrical energy plan and has undertaken an ongoing energy study to determine energy needs, resources and policy for the State, under 30 V.S.A. §§ 202 and 202b.

West Virginia: The interest of the State of West Virginia in this proceeding lies in its statutory responsibility to regulate public utilities and in the State's economic reliance on the development of its coal resources. *West Virginia Code* § 24-2-11 requires utilities subject to the jurisdiction of the State's Public Service Commission to obtain from the Commission a certificate of public convenience and necessity prior to the construction of any plant or facility. *West Virginia Code* § 24-1-1(a)(3) confers upon the Commission the duty to regulate the practices of public utilities in order to, among other things: "[e]ncourage the well-planned development of utility resources in a manner consistent with state needs and in ways consistent with the productive use of the State's energy resources, such as coal;" And, in *West Virginia Code* § 24-1-1(b), the Commission is charged with the responsibility for appraising and balancing the interest of current

and future utility service customers, the general interests of the State's economy, and the interests of the utilities subject to its jurisdiction in its deliberations and decisions.

At present the four major electric generating utilities subject to the jurisdiction of the Commission* have numerous generating facilities located within the State. While all of these companies may have nuclear facilities in other States, or are affiliated with companies with nuclear generation, all of the generating facilities located in the State are either fossil fuel or hydro-powered, and by far the predominant fuel is coal.

Wyoming: Wyoming has several laws which regulate large industrial facilities, including nuclear power plants, which laws would be affected by a decision in this matter. Although Wyoming does not presently have any nuclear power plants located in the State, Wyoming is a major producer of uranium and will logically have to face the prospect of having nuclear plants located within the State in the future. In that event, the State of Wyoming should not be precluded from a proper regulatory role.

Prior to constructing any power plant, regardless of the nature of the fuel, a utility must obtain a Certificate of Convenience and Necessity from the Wyoming Public Service Commission. The Certificate is granted based on the impact of the plant on consumers. This impact might be affected by the likely life span of the plant, which in turn may depend on the existence of a waste disposal facility for the plant. Additionally, any future power plant construction would require a permit from the Industrial Siting Council to assure that the facility will be in compliance with all ordinances and land use plans and that the facility will alleviate environmental, social and economic impacts in the county where the facility will be located.

* Appalachian Power Company, Monongahela Power Company, Potomac Edison Company and Virginia Electric and Power Company.

Summary of Argument

Regulation of electric utility companies for protection of ratepayers and residents is an undisputed State function. While petitioners ask the Court to rule that an exception to State power exists whenever a utility company chooses to build a nuclear plant as opposed to a coal- or oil-powered plant, no basis exists for such an exception. The Atomic Energy Act does not prevent the States from making the basic policy decision of *whether* a nuclear plant should be built. The States, rather than the utility companies, must make the decisions on how energy needs should be met. Congress has clearly expressed its support for energy conservation, coal and renewable energy. States that choose to meet their needs from such sources, instead of nuclear energy, are acting consistently with the will of Congress and are not preempted. For these reasons, and in light of the strong presumption of validity that attaches to all State laws, the California provisions are valid.

ARGUMENT

I. States Have Ample Authority to Regulate Public Utilities for Protection of the Ratepayers and the Effectuation of Other State Policies.

State regulation of public utilities is among the most basic exercises of the State police power. As Justice Brandeis observed, the "franchise to operate a public utility . . . is a special privilege which . . . may be granted or withheld at the pleasure of the State." *Frost* v. *Corporation Commission*, 278 U.S. 515, 534 (1929) (Brandeis, J., dissenting). In *Central Hudson Gas & Electric Corp.* v. *Public Service Commission of New York*, 447 U.S. 557 (1980), this Court recognized that the "State's concern

that rates be fair and efficient represents a clear and substantial governmental interest." *Id.* at 569.

The reason for State authority over utility companies is to assure reliable service, low rates and action consistent with other State policies despite the monopoly position granted by the State to the utility. The State, as grantor of the monopoly, must prevent improper action by the utilities. It has "extensive oversight . . . to protect the ratepayers from exploitation of the monopoly power through excessive rates and other forms of overreaching." *Consolidated Edison Co.* v. *Public Service Commission of New York*, 447 U.S. 530, 550 (1980), (Blackmun, J., dissenting). Accordingly, as this Court said in *Jackson* v. *Metropolitan Edison Co.*, 419 U.S. 345, 357 (1974): "The nature of governmental regulation of private utilities is such that a utility may frequently be required by the state regulatory scheme to obtain approval for practices a business regulated in less detail would be free to institute without any approval from a regulatory body."

What is ultimately at issue in this case is State power to regulate public utilities to assure reliable electric power at low rates and in a manner consistent with State economic and environmental policies. States have a legitimate interest in determining the types of power plants that are built. As California recognized, new nuclear plants are accompanied by substantial economic risks, especially if facilities to dispose of or store spent fuel do not exist. Thus, a plant costing several billions of dollars may be built with the expectation that it will operate for forty years. However, if it runs out of storage space after a few years, it may have to shut down prematurely, and the utility company will ask that the ratepayers continue paying for the unused facility.

Apart from these considerations, States may be opposed to any specific proposal to build a nuclear plant on various

grounds—such as that no power plant is needed, or that environmental damage would be greater than for an alternative mode. Or States may want to protect their ratepayers from the cost overruns experienced by nuclear plants, and from the frequent cancellations of nuclear plants—which are accompanied by utility company requests that the ratepayers pay for the investments in the aborted plants. Additionally, States already dependent on nuclear energy may want to bar future nuclear plants to assure a more diverse energy mix, which would increase reliability in case of problems generic to nuclear plants. Similarly, different types of nuclear reactors exist, and a State already dependent on nuclear reactors of one category may wish to require that any future nuclear plant use a different type of reactor, in case generic flaws are discovered with respect to the former model. Ultimately, the States on behalf of their residents—not the utility companies—must decide how energy needs should be met in light of State policy. States have a legitimate role to play in deciding *whether* nuclear plants should be built. As this Court said in *Vermont Yankee Nuclear Power Corp.* v. *NRDC*, 435 U.S. 519 (1978):

> Time may prove wrong the decision to develop nuclear energy, but it is Congress *or the States* within their appropriate agencies which must eventually make that judgment.

Id. at 558 (emphasis added). States which exercise their authority by declining the nuclear option, and choose to satisfy energy needs in other ways, are not barred by the Atomic Energy Act.

II. The Atomic Energy Act Does Not Prevent States from Deciding Whether Nuclear Plants May Be Constructed Within Their Borders.

A. The Atomic Energy Act Itself Does Not Preclude State Regulation of the Type Enacted by California, and Expressly Recognizes Continuing State Authority Over Nuclear Plants.

The Atomic Energy Act ("AEA") does not expressly preempt all State regulation of nuclear power. Any preemptive intent by Congress, therefore, would have to be implied. However, the Act contains at least two sections that evidence the intent of Congress not to preempt the type of legislation at issue here. Those sections are §§ 271 and 274 of the Act, 42 U.S.C. §§ 2018 and 2021. Section 271 provides as follows:

> Nothing in this chapter shall be construed to affect the authority or regulations of any Federal, State, or local agency with respect to the generation, sale, or transmission of electric power produced through the use of nuclear facilities licensed by the Commission; *Provided,* That this section shall not be deemed to confer upon any Federal, State, or local agency any authority to regulate, control, or restrict any activities of the Commission.

(Emphasis in original). This section was enacted in 1954, but the proviso was added in 1965. The purpose of the section was clearly to preserve traditional State power to regulate the generation and transmission of power by public utility companies, even if they operate nuclear plants. Thus, the report on the 1965 amendment by the Joint Committee on Atomic Energy contains the following explanation:

> . . . Section 271 was added to make it explicit that licensees of the AEC who produced power through the

> use of nuclear facilities would otherwise remain subject to the authority of all appropriate Federal, State, and local authorities with respect to the generation, sale, or transmission of electric power.

1965 U.S. Code Cong. and Adm. News at 2779.

The Congressional purpose to preserve State authority over all energy facilities is evident from other portions of the legislative history as well. For example, Representative Cole, who was Chairman of the Joint Committee on Atomic Energy, and co-sponsor of the 1954 Amendment, answered a colleague's inquiry as follows:

> [Rep.] Yates: In other words, the authority that is contained in this act for any person within the language of the definition of the act who proposes to construct a reactor for the production of power for civilian purposes is only a preliminary grant and such person must then go to the appropriate Federal or State agency in order to obtain a certificate of convenience and necessity in order to carry out the charter which is granted under the terms of this act; is that correct?
>
> * * *
>
> [Rep.] Cole: The answer is in the affirmative.

100 Cong. Rec. 11689 (1954).

The vitality of State power under § 2018 is demonstrated by *Maun* v. *United States,* 347 F.2d 970 (9th Cir. 1965), in which the Court held that under § 2018 activities of the Atomic Energy Commission ("AEC") itself were subject to local regulations. The Court said that the "prime purpose" of § 2018 is to preserve State authority over electricity from nuclear plants "to the same extent that electric power produced by conventional means is subject to such authority and regulation." *Id.* at 976. In response to *Maun* Congress added the proviso to § 2018 to prevent a

State from regulating the activities of the AEC itself, but Congress did not limit State regulatory power over utility companies.

The other section of the AEA which clearly recognizes the authority of States to regulate nuclear power plants is § 274, 42 U.S.C. § 2021. Section 2021(b) authorizes the Nuclear Regulatory Commission ("NRC") to cede a portion of its authority to protect against radiation hazards to the States, while § 2021(c) says that such power over the "construction and operation" of nuclear power plants should not be ceded. Section 274(k), 42 U.S.C. § 2021(k), provides:

> Nothing in this section [2021] shall be construed to affect the authority of any State or local agency to regulate activities *for purposes other than protection against radiation hazards.*

(Emphasis added). Moreover, Congress clearly implied that both State and Federal regulation would exist under the Act. Section 2021(g) provides for cooperation between NRC and State regulation of even radiation hazards:

> The Commission is authorized and directed to cooperate with the States in the formulation of standards for protection against hazards of radiation to assure that State and Commission programs for protection against hazards of radiation will be coordinated and compatible.

Petitioners, nonetheless, place heavy reliance on § 2021(c), arguing that the NRC has *exclusive* authority over the construction and operation of nuclear plants. This argument, however, is misguided in many respects. First of all, § 2021(c) does not use the words "exclusive," although Congress could easily have included it. This indicates that the power which the NRC may not cede is its authority concurrent with State power, whereas § 2021(b) allows the

NRC to cede to the States its concurrent jurisdiction over other issues. In addition, § 2021(c) is subject to the provision of § 2021(k) that nothing in the section limits State authority to regulate "for purposes other than protection against radiation hazards." This means that despite § 2021 (c) States may regulate even the construction and operation of nuclear plants if they do so for such other purposes. Since, as the Court of Appeals found, California legislated for economic purposes, and not to protect against radiation hazards, 659 F.2d at 923-25, its statute is clearly not preempted in light of § 2021(k).

The NRC's policy for now is that permitting new nuclear plants to be built—even though facilities to dispose of or store the nuclear waste may be unavailable—is consistent with its duty to protect public health and safety from radiation hazards. California has not contradicted that position. It has not said that it is unsafe to license new plants under the circumstances. The State has said only that from the point of view of protecting the economic interests of State residents, it is unwise to license new nuclear plants unless there is assurance that the plants would not be faced with premature shutdown because of the absence of facilities to accept the spent fuel. And, California has not regulated the manner of disposal of nuclear waste, only whether nuclear plants should be built.

Petitioner's reliance on *Northern States Power Co.* v. *Minnesota, supra,* is misplaced. This Court's summary affirmance in that case is of very limited precedential value, because the issues are being fully briefed and argued for the first time in the case at bar. *See Edelman* v. *Jordan,* 415 U.S. 651, 670-71 (1974). Moreover, the summary affirmance did not indicate Court approval of the Circuit Court's reasoning. *Mandel* v. *Bradley,* 432 U.S. 173, 176 (1977). In any event, *Northern States* merely invalidated a State regulation that directly affected the manner of operating a nuclear plant, where the State's purpose ap-

peared to be protection against radiation hazards. The State regulation there imposed limits on radioactive gas and liquid discharges from a nuclear plant. 447 F.2d at 1145. California's section 25524.2, by contrast, addresses whether to build a nuclear plant, not how to operate it, and does not directly address the issue of radiation hazards caused by plant emissions. As noted below, p. 30, Congress has rejected the *Northern States* approach in part by allowing States to set any discharge limits they deem appropriate on the air emissions from nuclear plants. *Northern States,* therefore, is not particularly relevant to this case.

It adds nothing to say that NRC regulatory authority over nuclear plants is very broad, because it is still necessary to determine which areas may be, and which ones are not, preempted. As this Court said, in *New York Dept. of Social Services* v. *Dublino,* 413 U.S. 405 (1973):

> We reject, to begin with, the contention that preemption is to be inferred merely from the comprehensive character of the federal work incentive provisions. . . . The subjects of modern social and regulatory legislation often by their very nature require intricate and complex responses from the Congress, but without Congress necessarily intending its enactment as the exclusive means of meeting the problem, cf. *Askew* v. *American Waterways,* 411 U.S. 325 (1973).

Id. at 415. *See also Kelly* v. *Washington,* 302 U.S. 1, 13 (1937).

B. Past Interpretations of the Atomic Energy Act by the AEC Support the Conclusion That NRC Authority Is Limited, and That States Retain Broad Power to Regulate Nuclear Power Plants—Including the Issue of Whether New Plants Should Be Built.

It has long been the position of the AEC, predecessor of the NRC as the regulatory agency under the AEA, that its jurisdiction under that Act extended only to common defense, national security and protection of the public health and safety with respect to radiation hazards. It did not extend to protecting the public with respect to any other issues, including non-radiological environmental, health and safety issues. For example, in *Matter of Vermont Yankee,* 4 AEC 75 (1968), the AEC said:

> Stated in other terms, the Commission's regulatory authority in the health and safety area is limited under the Act to matters of radiological health and safety.

Id. at 78-79. Similarly, the Atomic Safety and Licensing Board noted in another case that its jurisdiction was "restricted to a consideration of the possible radiological effects of the proposed facility." *Matter of Wisconsin Michigan Power Co.,* 4 AEC 3, at 6 n. (1967). The Commission's view of its jurisdiction was upheld by the First Circuit, in *State of New Hampshire* v. *Atomic Energy Commission,* 406 F.2d 170, *cert. denied,* 395 U.S. 962 (1969). In that case, the AEC had refused to consider the environmental impact on the Connecticut River of a nuclear plant's discharge of heated water. The Court upheld the AEC, saying that the AEA required the Commission to consider only "protection against hazards from radiation." *Id.* at 175.

It is true, of course, that the NRC now cannot shut its eyes to non-radiological issues, but its authority to consider such matters derives not from the Atomic Energy Act but

from the National Environmental Policy Act ("NEPA"), 42 U.S.C. § 4321, *et seq.*, which went into effect in 1970. That Act requires all Federal agencies, including the NRC, to consider environmental issues whenever they take major action which may have a significant effect upon the environment. However, while NEPA imposes obligations upon Federal agencies to consider environmental issues, it is never construed to preempt State power. As one court has said: "The fact that, under the NEPA, a nuclear plant's environmental impact is a matter of concern to both federal and state governments does not limit state action." *Marshall* v. *Consumer Power Co.*, 65 Mich. App. 237, 262, 237 N.W. 2d 266, 282 (Mich. 1976). Indeed, since the NRC has no special expertise with respect to most environmental issues, it would make no sense to say that the NRC alone, to the exclusion of State agencies with far greater expertise in the field, decides environmental issues.

The NRC itself has recognized that its review of non-radiological issues under NEPA does not oust State regulation of those issues. In *Matter of Consolidated Edison Company of New York, Inc.*, 7 NRC 31 (1978), the NRC ruled, in part, that States could prohibit the construction of nuclear plants despite NRC approval of such construction. The Appeal Board said:

> In ALAB-399, we were confronted with a narrow and novel question. We did not have the case of a State (or one of its political subdivisions) refusing to authorize the construction of a nuclear power plant on environmental grounds. Clearly, such a refusal would not conflict with Federal law. Although, by virtue of the National Environmental Policy Act, this Commission must make an environmental assessment of all proposals to construct and operate nuclear power plants, nothing in that Act requires a State to place its own stamp of approval on a specific proposal simply because it has passed Federal muster. To the contrary,

> States (and, upon appropriate delegation, their political subdivisions) retain the right, even in the face of the issuance of an NRC construction permit, to preclude construction on such bases as a lack of need for additional generating capacity or the environmental unacceptability of the proposed facility or site.

Id. at 34.

Therefore, States are free to regulate all non-radiation issues involving nuclear power plants, including economic issues. For example, this Court said in *Vermont Yankee Nuclear Power Corp., supra*:

> There is little doubt that under the Atomic Energy Act of 1954, state public utility commissions or similar bodies are empowered to make the initial decision regarding the need for power. 42 U.S.C. § 2021(k) . . .

435 U.S. at 550. Similarly, if a new plant is needed, States rather than the NRC determine whether a nuclear plant or another type of plant would be preferable from an economic point of view. In *Matter of Consumers Power Company*, 7 NRC 155 (1978), the NRC Appeal Board said:

> In the Atomic Energy Act, Congress did not make this agency responsible for assessing whether a proposed nuclear plant would be the most financially advantageous way for a utility to satisfy its customers' need for power. Such matters remained the province of the utility and its supervising state regulatory commission . . .

Id. at 162.

In addition, the NRC has recognized that States have the right to reject a new nuclear plant, despite NRC approval of the plant. For example, in *Matter of Long Island Lighting Company*, 9 NRC 51 (1979), Suffolk County, New York, applied to the NRC for an injunction barring the

Lighting Company from commencing construction of the proposed Jamesport nuclear plant, for which the NRC had issued a construction permit. The NRC denied the County's motion as unnecessary because the company was not permitted to build under State law, saying:

> To be sure, applicants now have construction permits from this Commission. But they do not have approval of the project from the State of New York and they may not commence construction or even site preparation without such approval.

Id. at 53. *Accord, Matter of Southern California Edison Co.*, 7 AEC 37 (1974), which ruled that the NRC should not proceed to review a license application which had been tentatively disapproved by the State because "irrespective of how we might rule, such construction would remain foreclosed" by State action. *Id.* at 40. And in *Matter of Susquehanna Steam Electric Station Units 1&2*, CCH Nuc. Reg. Rptr. ¶30,394 (1979), the NRC Appeal Board said:

> The Applicants may not operate the Susquehanna facility without obtaining the NRC license—even if they were first to obtain the requisite state, local and other federal permits. And they may not operate if they fail to obtain certain state, local or other federal permits—even if they were earlier awarded an NRC operating license.

Id. at pp. 28,996-7. See also *Matter of Consolidated Edison Company of New York, Inc., supra*, p. 22, and *Matter of Rochester Gas and Electric Corporation*, 8 NRC 383, 389 (1978) (receipt of a State permit "is a condition precedent to plant construction no matter what this Commission might conclude regarding the need for the plant . . .").

The NRC does not consider energy-mix and reliability issues, but the State must consider them. Thus, if a State is already very dependent on nuclear energy, and one of

its utilities applies to the NRC for permission to build yet another nuclear plant, a State could decide to reject the proposal solely for the sake of assuring a better diversity of energy sources, and approve instead a different type of plant. The NRC, however, with its authority limited to nuclear energy, is very unlikely under the Act to deny the application on that basis or to decide that a non-nuclear plant would be preferable, especially since the NRC has no authority to approve any other type of plant. Therefore, unless the State's power to do so is preserved, there would be a regulatory void in which no government agency could decide on the best energy mix for the State.

As the preceding discussion makes clear, NRC authority under the AEA is limited to defense, national security and protection of the public against radiation hazards. However, the States are not altogether precluded from regulating even in the sphere of protection against radiation hazards. See discussion of § 2021(g) of the AEA, above p. 18, recognizing that States too will have programs for protecting against radiation hazards. Also, Congress, in the Clean Air Act Amendments of 1977, gave the States authority to regulate air emissions from nuclear power plants to protect against radiation hazards. See below p. 29. In any event, the California provision was correctly found by the Court of Appeals to be a regulation for purposes other than protection against radiation hazards, 659 F.2d at 923-5, and surely it is not preempted.

III. There Is No Congressional Objective of Forcing States to Accept New Nuclear Plants if They Can Meet Their Energy Needs With Coal, Conservation or Other Modes Approved by Congress.

A. The Atomic Energy Act Itself Does Not Express a Congressional Policy That Nuclear Plants Should Be Built.

The AEA does not mandate the construction of nuclear plants, or require that every license to build a nuclear plant be granted. Instead the Act establishes fundamental standards which a license applicant must meet, and authorizes the NRC by rule to impose more detailed standards. There is nothing in the Act's provisions which demonstrates an objective of Congress to require the use of nuclear power for commercial purposes instead of other sources of power. Section 1 of the Act, 42 U.S.C. § 2011, does not require that nuclear power be used for commercial purposes. Rather, the Act says that any development of atomic energy that may occur "shall be directed" to accomplish certain specific purposes, among them being the improvement of the general welfare. Similarly, § 2 of the Act, 42 U.S.C. § 2012, expresses no objective to require the use of nuclear power. While subdivision (i) does mention encouraging the "development of the atomic energy industry," it proposes to do so only by making funds "available for a portion of the damages suffered by the public from nuclear incidents, and [by limiting] the liability of those persons liable for such losses." This was done through the Price-Anderson Act, 42 U.S.C. § 2210. Subdivision (i) of § 2012 does not indicate an intention to override State decisions on energy sources.

Section 3 of the Act, 42 U.S.C. § 2013(d), also offers petitioners no support. It seeks to provide for "widespread

participation" in any development that may occur—i.e., that possession of nuclear materials will not be the monopoly of a few companies. It does not, however, declare a policy for the maximum development of nuclear power as against other forms of power.

B. Legislation Enacted Since Passage of The Atomic Energy Act Demonstrates That Nuclear Power Has Been De-emphasized by Congress, and That Conservation Along With Other Forms of Energy Have Been Promoted.

Petitioners argue that promoting nuclear energy is an over-riding objective of Congress, and that States therefore have no option to substitute other forms of energy. This conclusion flies in the face of repeated Congressional pronouncements in recent years de-emphazing nuclear energy and promoting various alternatives. In one of those Congressional pronouncements the predecessor of the NRC, the AEC, was abolished in 1974 precisely because the agency's desire to promote nuclear development was deemed inconsistent with its role as protector of public health and safety. See the Energy Reorganization Act of 1974, 42 U.S.C. § 5801, *et seq.* That Act transferred the regulatory functions of the AEC to the new NRC, *id.* at § 5841, and any promotional function of the AEC to the Energy Research and Development Administration ("ERDA"). *Id.* at § 5811. The ERDA functions have since been transferred to the Secretary of Energy. 42 U.S.C. § 7151(a). Congress also downplayed the promotion function of ERDA. Indeed, ERDA was directed to encourage and do research on energy conservation, 42 U.S.C. § 5813(8), and also do research on other energy sources, including fossil, solar, geothermal and other sources as well as nuclear. *Id.* § 5813(2). As a result, nuclear energy was not to be promoted over other forms of energy, or indeed over the conservation of energy.

The Senate Report on the 1974 Act confirms the purpose of strengthening the regulation of nuclear plants:

> The reorganization established by this legislation has the additional purpose of separating the regulatory functions of the AEC from its developmental and promotional functions—a response to growing criticism that there is a basic conflict between the AEC's regulation of the nuclear power industry and its development and promotion of new technology for the industry.

Sen. Rpt. 93-980, 1974 U.S. Code Cong. & Adm. News at 5471. The Report notes that certain groups "expressed deep concerns regarding the possibility of a pro-nuclear bias in ERDA." *Id.* at 5476. In response the Report says that the Act prohibits "any unwarranted bias in favor of a single energy technology . . . and [places] greater relative emphasis on nonnuclear energy, including such clean renewable sources as solar and geothermal energy." *Id.* at 5480.

The Congressional mandate to ERDA, now the Secretary of Energy, to promote nonnuclear sources of energy was further underscored by the Federal Nonnuclear Energy Research and Development Act of 1974, 42 U.S.C. § 5901, *et seq.* The Act required the Administrator of ERDA to develop a comprehensive plan and program for research, development and demonstration of nonnuclear energy sources, including energy conservation, geothermal, solar and tidal energy, among others. *Id.* at § 5905(b)(3) (A), (F), (I) and (K).

Conservation of energy, rather than development of nuclear and other types of power, was the theme of the Energy Policy and Conservation Act of 1975, which proclaimed the policy of Congress "to reduce demand for energy through the implementation of energy conservation plans . . . [and] to conserve energy supplies through energy conservation programs, and, where necessary, the regula-

tion of certain energy uses." 42 U.S.C. § 6201. In that Act Congress sought to encourage domestic coal production, *id.* § 6211, improve energy efficiency of various appliances, *id.* § 6291, *et seq.*, encourage the States to foster energy conservation, *id.* § 6321, and promote increased energy efficiency by industrial users, *id.* § 6342.

The de-emphasis of nuclear energy by Congress was continued in the Department of Energy Organization Act of 1977, 42 U.S.C. § 7101, *et seq.* In that Act's declaration of purpose Congress listed, among other things, the promotion of energy conservation, and the development and commercial use of solar, geothermal, recycling and other technologies utilizing renewable energy resources. *Id.* § 7112 (4) and (6).

Moreover, in the Clean Air Act Amendments of 1977, Congress specifically permitted States to regulate radioactive emissions from nuclear plants and to force noncomplying plants to shut down. Those Amendments expressly allow States to regulate even in the sphere of protecting against radiation hazards. As amended in 1977, the Clean Air Act defines "air pollutant" to include, among other things, any "radioactive (including source material, special nuclear material, and byproduct material) substance," 42 U.S.C. § 7602(g). The Act provides that, except with respect to certain regulations of moving air pollution sources, "nothing in this chapter shall preclude or deny the right of any State or political subdivision thereof to adopt or enforce (1) any standard or limitation respecting emissions of air pollutants or (2) any requirement respecting control or abatement of air pollution." *Id.* § 7416.* And, while the NRC may object to a standard that is so weak as to "endanger public health and safety," *id.* § 7422(c)(3), it has no power to veto strict standards.

* That section also contains an exception for certain State implementation plans, not relevant here.

The effect of these amendments is clear. They permit States to adopt air pollution standards for radioactive emissions and other pollutants—even standards more strict than those adopted by the Federal Government—which standards would then be binding. These amendments overrule at least in part the decision in *Northern States Power Co.* v. *State of Minnesota, supra,* holding that States were pre-empted from regulating radioactive discharges from nuclear power plants. The Congressional intent to overrule *Northern States* appears in the Conference Committee Report on the 1977 Amendments, which says as follows:

> Under this provision, radioactive pollutants, including source material, special nuclear material, and byproduct material are covered by Section 116 of The Clean Air Act [42 U.S.C. § 7416]. Thus, any State, or political subdivision thereof, may establish standards more stringent than Federal, or where a Federal standard has not been established, may establish any standards they deem appropriate. Thus the provision would not preempt States and localities from setting and enforcing stricter air pollution standards for radiation than the Federal standards, and would not follow the holding of *Northern States Power Co.* v. *State of Minnesota,* 447 F.2d 1143 (8th Cir. 1971) aff'd 405 U.S. 1035 (1972) in the context of radioactive air pollution.

1977 U.S. Code Cong. & Adm. News at 1523-24. See also the House Report on the Amendments. *Id.* at 1121.

The power of States under these Amendments to halt the operation of nuclear plants which are already built was expressly recognized by a tribunal of the NRC. In the *Matter of Consolidated Edison Company of New York, Inc., supra,* the NRC Atomic Safety and Licensing Appeal Board ruled that States could prohibit the construction of nuclear plants despite NRC approval of such construction, and could even shut down an already existing nuclear plant

under their Clean Air Act powers. The decision reads, in part, as follows:

> In ALAB-399 . . . [w]e also did not have before us the case of a State (or one of its political subdivisions) acting to prevent or halt the operation of an already built nuclear plant for some valid reason under State law. There are at least some grounds on which that could be done without conflicting with Federal law.[13]

13. For example, under the Clean Air Act Amendments of 1977, Pub. L. 95-95, 91 Stat. 685 (August 7, 1977), [September 1977] U.S. CODE CONG. & AD. NEWS (codified in 42 U.S.C. §§ 7401, *et. seq.*), States may establish and enforce emission standards for radioactive pollutants into the air either under the Clean Air Act itself or under State law. See Sections 122(a), 110, 112(d)(1), and 116 of the Clean Air Act, 42 U.S.C. §§ 7422(a), 7410, 7412(d)(1), and 7416 . . .

7 NRC at 34-5.

That promotion of nuclear energy is not a major objective of Congress is further reflected in the National Energy Conservation Policy Act of 1978, 42 U.S.C. § 8201, *et seq.*, which sought "to reduce the growth in demand for energy in the United States, and to conserve nonrenewable energy resources produced in this Nation and elsewhere. . . ." *Id.* § 8201(b). That Act established energy conservation programs for residences and public buildings, and called upon the Federal Government to conserve energy and use solar heating and cooling in its buildings. With respect to the latter program, Congress declared its purpose "to promote . . . the use of solar heating and cooling and other renewable energy sources in Federal buildings." *Id.* § 8253(2). Furthermore, in the Energy Tax Act of 1978, Congress authorized an income tax credit for residential expenditures on energy conservation or solar, geothermal and wind energy. 26 U.S.C. § 44C.

Similarly, the Powerplant and Industrial Fuel Use Act of 1978, 42 U.S.C. § 8301, *et seq.*, was enacted to promote

and require the use of "coal and other alternative fuels" in place of natural gas and petroleum for power-plants and other fuel burning facilities. *Id.* § 8301(a)(1). If Congress wanted to require the use of nuclear energy, that Act was certainly the place to say so. Instead, Congress specifically mentioned only coal. And in the Public Utility Regulatory Policies Act of 1978, Congress established, among other thing, "a program providing for increased conservation of electric energy," 16 U.S.C. § 2601(1). In the Act, Congress required each State agency with authority over electric utility rates, and each nonregulated electric utility, to consider various strategies designed to provide economic incentives for customers to reduce their use of energy. *Id.* §§ 2621, 2623. Congress directed the Secretary of Energy to "develop proposals to improve electric utility rate design . . . to encourage energy conservation, [and] minimize the need for new electrical generating capacity." 42 U.S.C. § 6803. That Act also required the Secretary of Energy to establish a program encouraging the development of small hydroelectric power projects. 16 U.S.C. § 2701.

Again in 1980 Congress expressed its support for encouraging renewable energy resources, 42 U.S.C. § 7371, *et seq.*, ocean thermal energy conversion, 42 U.S.C. § 9001, *et seq.*, wind energy, 42 U.S.C. § 9201 and recovery of energy from municipal waste, 42 U.S.C. § 8837. Congress also created the Synthetic Fuels Corporation to promote the production of energy from coal, shale and tar sands. 42 U.S.C. § 8701, *et seq.*

Thus, since amendment of the AEA in 1954, and since the *Northern States* case, *supra,* was decided a decade ago, Congress has repeatedly demonstrated its policy of promoting energy conservation to reduce the need for new power plants, and of promoting renewable energy from solar,

geothermal, and other sources as well as from solid waste. Among conventional fuels, Congress has expressed special interest in coal. Nuclear plants are continued as one possible source of energy, but they have been downplayed rather than promoted or encouraged.*

If a State can meet all of its energy needs by use of conservation, coal, solar, wind or other forms of energy favored by Congress, it makes no sense to say that it must nonetheless accept a nuclear plant as well because a utility company wants to build one. The State rather than the utility company has the right to decide what mix of energy producing facilities should be built—especially if it is selecting from among the several forms of energy favored by Congress.

It must be recalled that a Federal permit to build a nuclear plant is just that and nothing more—it grants permission, but is not an order that the plant be built. Therefore, State refusal to accept the plant would not conflict with a Federal mandate.

This Court should make every effort to reconcile the California statute with the Atomic Energy Act rather than find pre-emption. The Court is bound "by the conviction that the proper approach is to reconcile 'the operation of both statutory schemes with one another rather than holding one completely ousted.' " *Merrill Lynch, Pierce, Fenner & Smith* v. *Ware*, 414 U.S. 117, 127 (1973), quoting from *Silver* v. *New York Stock Exchange*, 373 U.S. 341, 357 (1963). Here, reconciliation of the two schemes is simple enough, as Congress did not require the construction of nuclear plants or oust California of jurisdiction to protect

* This Court has recently said that although Congress is indeed seeking to encourage the use of coal, that does not "demonstrate a congressional intent to pre-empt all state legislation that may have an adverse impact on the use of coal." *Commonwealth Edison Co.* v. *Montana*, 453 U.S. 609, 633 (1981).

its ratepayers and residents. In view of the strong presumption in favor of the constitution "ity of the State law, and the absence of any clear intent to preempt, the California statute should be upheld, rather than struck down on the mere "speculation about the unexpressed intent of Congress." *New York Telephone Co.* v. *New York State Dept. of Labor*, 440 U.S. 519, 545 (1979).

Conclusion

The Court of Appeals decision upholding Cal. Pub. Res. Code § 25524 2 should be affirmed. In addition, if this Court concludes that the challenge to § 25524.1(b) is ripe, it should uphold the validity of that provision.

Dated: November 1982

Respectfully submitted,

For the State of New York
ROBERT ABRAMS
Attorney General
PETER H. SCHIFF
Acting Attorney In Chief
Appeals and Opinions

EZRA I. BIALIK
Assistant Attorney General
Counsel of Record
Environmental Protection Bureau
2 World Trade Center
New York, New York 10047
(212) 488-7565

For the State of Alaska
WILSON L. CONDON
Attorney General
DOUGLAS K. MERTZ
Assistant Attorney General
Pouch K, State Capitol
Juneau, Alaska 99811

For the State of Arizona
ROBERT K. CORBIN
Attorney General
ANTHONY B. CHING
Solicitor General
1275 West Washington Street
Phoenix, Arizona 85007

For the State of Arkansas
JOHN STEVEN CLARK
Attorney General
Justice Building
Little Rock, Arkansas 72201

For the State of Hawaii
TANY S. HONG
Attorney General
MICHAEL A. LILLY
First Deputy Attorney General
State Capitol
Honolulu, Hawaii 96813

For the State of Kansas
ROBERT T. STEPHAN
Attorney General
ROBERT VINSON EYE
Assistant Attorney General
BRIAN J. MOLINE
General Counsel, State Corporation Commission
Topeka, Kansas

For the State of Louisiana
WILLIAM J. GUSTE, JR.
Attorney General
KENDALL L. VICK
Assistant Attorney General
2-3-4 Loyola Building
New Orleans, Louisiana 70112

For the State of Minnesota by its Attorney General and its Minnesota Pollution Control Agency
WARREN SPANNAUS
Attorney General
JOCELYN F. OLSON
Special Assistant Attorney General
1935 West County Road B-2
Roseville, Minnesota 55113

For the State of Mississippi
BILL ALLAIN
Attorney General
MACK CAMERON
Special Assistant Attorney General
Box 220
Jackson, Mississippi 39205

For the State of Montana
MIKE GREELY
Attorney General
MIKE McGRATH
Assistant Attorney General
State Capitol
Helena, Montana 59620

For the State of Nevada
RICHARD H. BRYAN
Attorney General
LARRY STRUVE
Chief Deputy Attorney General
Capital Complex
Heroes Memorial Building
Carson City, Nevada 89710

For the State of Ohio
WILLIAM J. BROWN
Attorney General
E. DENNIS MUCHNICKI
Assistant Attorney General
30 East Broad Street
Columbus, Ohio 43215

For the State of Oklahoma
JAN ERIC CARTWRIGHT
Attorney General
SARA J. DRAKE
Assistant Attorney General
State Capitol
Oklahoma City, Oklahoma 73105

For the State of South Carolina
DANIEL R. MCLEOD
Attorney General
RICHARD P. WILSON
Assistant Attorney General
Rembert C. Dennis Building
P.O. Box 11549
Columbia, South Carolina 29211

For the State of Vermont
JOHN J. EASTON, JR.
Attorney General
MERIDETH WRIGHT
Assistant Attorney General
109 State Street
Montpelier, Vermont 05602

For the State of West Virginia
CHAUNCEY H. BROWNING
Attorney General
ROBERT R. RODECKER
General Counsel, Public Service Commission of West Virginia
950 Kanawha Boulevard East
Charleston, West Virginia 25301

For the State of Wyoming
STEVEN F. FREUDENTHAL
Attorney General
WALTER PERRY III
Senior Assistant Attorney General
Cheyenne, Wyoming 82002

Amicus Brief

2

CORRECTED COPY

Office - Supreme Court, U.S.
FILED
SEP 2 1982
ALEXANDER L. STEVAS,
CLERK

No. 81-1945

IN THE

Supreme Court of the United States

OCTOBER TERM, 1982

PACIFIC GAS AND ELECTRIC COMPANY and
SOUTHERN CALIFORNIA EDISON COMPANY,
Petitioners,

v.

STATE ENERGY RESOURCES CONSERVATION AND
DEVELOPMENT COMMISSION, *et al.*,
Respondents.

On Writ of Certiorari to the United States Court of Appeals for the Ninth Circuit

---

BRIEF OF THE ATOMIC INDUSTRIAL FORUM AS AMICUS CURIAE IN SUPPORT OF PETITIONERS

LEONARD M. TROSTEN
Counsel of Record
EUGENE R. FIDELL
DANIEL J. CONWAY
LEBOEUF, LAMB, LEIBY & MACRAE
Suite 1100
1333 New Hampshire Ave., N.W.
Washington, D.C. 20036
(202) 457-7500
Attorneys for Amicus Curiae

LINDA L. HODGE
Staff Counsel
ATOMIC INDUSTRIAL FORUM, INC.
7101 Wisconsin Avenue
Washington, D.C. 20014

September 1982

WILSON - EPES PRINTING CO., INC. - 789-0096 - WASHINGTON, D.C. 20001

QUESTIONS PRESENTED

1. Whether petitioners' challenges to the provisions in the 1976 amendments to California's Warren-Alquist Act, Cal. Pub. Res. Code §§ 25524.1(b) and 25524.2 (West 1977), which condition the construction of nuclear plants on findings by the State Energy Resources Conservation and Development Commission that adequate storage facilities and means of disposal are available for high-level nuclear waste, are ripe for judicial review?

2. Whether §§ 25524.1(b) and 25524.2 are preempted by the Atomic Energy Act of 1954, 42 U.S.C. §§ 2011 *et seq.*?

TABLE OF CONTENTS

	Page
INTEREST OF THE ATOMIC INDUSTRIAL FORUM	1
STATUTES INVOLVED	3
STATEMENT	5
SUMMARY OF ARGUMENT	7
ARGUMENT	8
I. THE CHALLENGES TO THE SPENT FUEL AND WASTE DISPOSAL PROVISIONS ARE RIPE FOR REVIEW	8
II. THE SPENT FUEL AND WASTE DISPOSAL PROVISIONS IMPERMISSIBLY INTRUDE ON AN AREA PREEMPTED BY THE ATOMIC ENERGY ACT AND THWART FEDERAL POLICY TO ENCOURAGE NUCLEAR DEVELOPMENT	12
A. The Federal Government is Still Exclusively Responsible for Regulation of Spent Fuel Storage and Nuclear Waste Disposal	12
B. The Spent Fuel and Waste Disposal Provisions are a Transparent Attempt to Regulate Radiological Health and Safety	19
C. California is Usurping the NRC's Role	26
CONCLUSION	30

TABLE OF AUTHORITIES

Cases: Page

Abbott Laboratories v. Gardner, 387 U.S. 136 (1967) 9, 10
Brown v. Duchesne, 60 U.S. (19 How.) 183 (1857) 21
City of Chicago v. Atchison, T. & S.F. Ry. Co., 357 U.S. 77 (1958) 12
City of Philadelphia v. New Jersey, 437 U.S. 617 (1978) 26
Commonwealth Edison Co. v. Montana, 453 U.S. 609 (1981) 17
Continental Illinois Nat'l Bank & Trust Co. of Chicago v. United States, 185 Ct. Cl. 642, 403 F.2d 721 (1968), *cert. denied*, 394 U.S. 973 (1969) 23
Duke Power Co. v. Carolina Environmental Study Group, Inc., 438 U.S. 59 (1978) 9, 17
Evers v. Dwyer, 358 U.S. 202 (1958) 11
Exxon Nuclear Co. (Nuclear Fuel Recovery and Recycling Center), 6 N.R.C. 873 (App. Bd. 1977) 14
Hines v. Davidowitz, 312 U.S. 52 (1941) 6
Illinois v. General Electric Co., 2 Nuclear Reg. Rep. (CCH) ¶ 20,229 (7th Cir. July 13, 1982) 15-16, 18, 22, 27
Jackson v. Kelly, 557 F.2d 735 (10th Cir. 1977) 23
Jones v. Rath Packing Co., 430 U.S. 519 (1977) 24
Kokoszka v. Belford, 417 U.S. 642 (1974) 21
Minnesota v. NRC, 602 F.2d 412 (D.C. Cir. 1979), *remanding In re Northern States Power Co.*, 7 N.R.C. 41 (App. Bd. 1978) 27, 28-29
Natural Resources Defense Council, Inc. v. NRC, 539 F.2d 824 (2d Cir. 1976), *vacated and remanded sub nom. Westinghouse Electric Corp. v. Natural Resources Defense Council, Inc.*, 434 U.S. 1030 (1978) 5
Natural Resources Defense Council, Inc. v. NRC, 582 F.2d 166 (2d Cir. 1978) 27
Northern States Power Co. v. Minnesota, 447 F.2d 1143 (8th Cir. 1971), *aff'd mem.*, 405 U.S. 1035 (1972) 15, 22, 27

TABLE OF AUTHORITIES—Continued

	Page
Pacific Legal Foundation v. State Energy Resources Conservation and Development Commission, 659 F.2d 903 (9th Cir. 1981), *rev'g* 489 F. Supp. 699 (E.D. Cal. 1980)	7
Perez v. Campbell, 402 U.S. 637 (1971)	20, 26
Potomac Alliance v. NRC, 2 Nuclear Reg. Rep. (CCH) ¶ 20,231 (D.C. Cir. July 20, 1982)	29
Power Reactor Development Co. v. Int'l Union of Electrical Workers, 367 U.S. 396 (1961)	20
Public Utilities Commission of California v. United States, 355 U.S. 534 (1958)	12
Railroad Transfer Service, Inc. v. City of Chicago, 386 U.S. 351 (1967)	12
Ray v. Atlantic Richfield Co., 435 U.S. 151 (1978)	27
Regional Rail Reorganization Act Cases, 419 U.S. 102 (1974)	9
St. Martin Evangelical Lutheran Church v. South Dakota, 451 U.S. 772 (1981)	19
Super Tire Engineering Co. v. McCorkle, 416 U.S. 115 (1974)	11
Train v. Colorado Public Interest Research Group, Inc., 426 U.S. 1 (1976)	15, 22
Vermont Yankee Nuclear Power Corp. v. Natural Resources Defense Council, Inc., 435 U.S. 519 (1978)	13
Washington State Building and Construction Trades Council, AFL-CIO v. Spellman, 518 F. Supp. 928 (E.D. Wash. 1981), *aff'd*, No. 81-3453 (9th Cir. Aug. 17, 1982)	15-16
Zschernig v. Miller, 389 U.S. 429 (1968)	6
Federal Statutes:	
Atomic Energy Act of 1946, Act of Aug. 1, 1946, ch. 724, 60 Stat. 755 (1946)	12
Atomic Energy Act of 1954, 42 U.S.C. §§ 2011 *et seq.* (1976 & Supp. IV 1980)	*passim*
42 U.S.C. § 2011 (1976)	16
42 U.S.C. § 2012(a) (1976)	17
42 U.S.C. § 2012(i) (1976)	16

TABLE OF AUTHORITIES—Continued

	Page
42 U.S.C. § 2013(a) (1976)	16
42 U.S.C. § 2013(c) (1976)	16
42 U.S.C. § 2013(d) (1976)	16
42 U.S.C. § 2014(e) (1976 & Supp. IV 1980)	13
42 U.S.C. § 2014(z) (1976 & Supp. IV 1980)	13
42 U.S.C. § 2014 (aa) (1976 & Supp. IV 1980)	13
42 U.S.C. § 2018 (1976 & Supp. IV 1980)	15
42 U.S.C. § 2021 (1976 & Supp. IV 1980)	13, 15
42 U.S.C. § 2021(c) (1976 & Supp. IV 1980)	4, 14
42 U.S.C. § 2021(c)(1), (4) (1976 & Supp. IV 1980)	14
42 U.S.C. § 2021(j) (1976 & Supp. IV 1980)	13
42 U.S.C. § 2021(k) (1976)	5, 15
42 U.S.C. § 2031 (1970)	18
42 U.S.C. § 2032 (1970)	18
42 U.S.C. §§ 2061-64 (1976)	13
42 U.S.C. § 2073 (1976)	27
42 U.S.C. §§ 2071-78 (1976 & Supp. IV 1980)	13
42 U.S.C. §§ 2091-99 (1976 & Supp. IV 1980)	13
42 U.S.C. § 2111 (1976 & Supp. IV 1980)	27
42 U.S.C. §§ 2111-14 (1976 & Supp. IV 1980)	13
Clean Air Act, 42 U.S.C. § 7416 (Supp. IV 1980)	18
42 U.S.C. § 7422 (Supp. IV 1980)	18
Energy Policy and Conservation Act of 1975, 42 U.S.C. § 6201(6) (1976 & Supp. IV 1980)	17
Energy Reorganization Act of 1974, 42 U.S.C. § 5841 (1976)	17
Federal Nonnuclear Energy Research and Development Act of 1974, 42 U.S.C. §§ 5901-20 (1976 & Supp. IV 1980)	18
42 U.S.C. § 5902(b)(2)	18
Industrial Fuel Use Act, 42 U.S.C. § 8302(a)(6)(A) (Supp. IV 1980)	18
National Environmental Policy Act of 1969, 42 U.S.C. §§ 4321 *et seq.* (1976 & Supp. IV 1980)	14

TABLE OF AUTHORITIES—Continued

	Page
Nuclear Non-Proliferation Act of 1978, 22 U.S.C. §§ 3201 *et seq.* (Supp. IV 1980)	6
NRC Appropriation Authorization Act of 1980, Pub. L. No. 96-295, § 108(*f*), 94 Stat. 780 (1980)	18
Price-Anderson Act of 1957, 42 U.S.C. § 2210 (1976 & Supp. IV 1980)	17
Federal Regulations:	
10 C.F.R. § 2.715(c) (1982)	14
10 C.F.R. § 50.2(a)(3) (1982)	6
10 C.F.R. § 51.23 (1982)	14
10 C.F.R. § 51.24(c)(3) (1982)	14
10 C.F.R. § 51.26(c) (1982)	14
10 C.F.R. Pt. 72 (1982)	27
10 C.F.R. § 72.6 (1982)	27
10 C.F.R. § 72.8 (1982)	27
Congressional Materials:	
100 Cong. Rec. 12015 (1954)	15
105 Cong. Rec. 8384 (1959)	14
105 Cong. Rec. 8385 (1959)	13
Federal-State Relationships in the Atomic Energy Field: Hearings before the Joint Comm. on Atomic Energy, 86th Cong., 1st Sess. (1959)	15
H.R. 5016, 97th Cong., 1st Sess. (1981)	29
H.R. 3809, 97th Cong., 2d Sess. (1982)	29
H.R. 6598, 97th Cong., 2d Sess. (1982)	29
H.R. Rep. No. 567, 89th Cong., 1st Sess. (1965)	15
S. 1662, 97th Cong., 2d Sess. (1982)	29
S. Rep. No. 650, 89th Cong., 1st Sess. (1965)	17
S. Rep. No. 870, 86th Cong., 1st Sess. (1959)	14, 15
S. Rep. No. 1699, 83d Cong., 2d Sess. (1954)	17
State Statutes and Regulations:	
Cal. Pub. Res. Code §§ 25502 *et seq.* (West 1977 & Supp. 1982)	24
§ 25504	23
§ 25506.5	23
§ 25511 (West Supp. 1982)	21, 22

TABLE OF AUTHORITIES—Continued

	Page
§ 25520	21, 22
§ 25524.1	*passim*
§ 25524.1(b)	(i), 3, 5, 6
§ 25524.2	*passim*
§ 25524.2(a)	3, 6
§ 25524.2(b)	3, 6
§ 25524.3	21
§ 25524.3(a) (West Supp. 1982)	21
Cal Pub. Util. Code § 451 (West Supp. 1982)	23
Cal. Pub. Util. Code §§ 1001-02 (West Supp. 1982)	23
1976 Cal. Stat. ch. 196, § 2	21
Cal. Admin. Code, tit. 20, R. 1720 (1979)	24
Cal. Admin. Code, tit. 20, R. 1752 (1981)	25
Miscellaneous:	
K. Davis, *Administrative Law Treatise* § 21.00 (Supp. 1982)	9
Murphy & LaPierre, *Nuclear "Moratorium" Legislation in the States and the Supremacy Clause: A Case of Express Preemption*, 76 Colum. L. Rev. 392 (1976)	18
L. Tribe, *American Constitutional Law* (Supp. 1979)	11
13 C. Wright, A. Miller & E. Cooper, *Federal Practice and Procedure: Jurisdiction* § 3530 (1975 & Supp. 1981)	11
President's Statement Announcing a Series of Policy Initiatives, 17 Weekly Comp. Pres. Doc. 1101 (Oct. 8, 1981)	17
U.S. Dep't of Energy, *Spent Fuel and Radioactive Waste Inventories and Projections As of December 31, 1980*, DOE NE 0017 (Sept. 1981)	29
44 Fed. Reg. 61,372 (1979)	29
42 Fed. Reg. 34,391 (1977)	28
61 Ops. Cal. Att'y Gen. 159 (1978), [1964-1981 Transfer Binder] Nuclear Reg. Rep. (CCH) ¶ 20,088 (Apr. 25, 1978)	6

IN THE

Supreme Court of the United States

OCTOBER TERM, 1982

No. 81-1945

PACIFIC GAS AND ELECTRIC COMPANY and
SOUTHERN CALIFORNIA EDISON COMPANY,
Petitioners,

v.

STATE ENERGY RESOURCES CONSERVATION AND
DEVELOPMENT COMMISSION, *et al.*,
Respondents.

On Writ of Certiorari to the United States Court of Appeals for the Ninth Circuit

---

BRIEF OF THE ATOMIC INDUSTRIAL FORUM AS AMICUS CURIAE IN SUPPORT OF PETITIONERS

All parties have consented to the submission of this *amicus curiae* brief by the Atomic Industrial Forum, Inc. ("the Forum") in support of the petitioners. Copies of the consents have been filed with the Clerk.

INTEREST OF THE ATOMIC INDUSTRIAL FORUM

The Forum is an association of about six hundred domestic and overseas organizations involved in the peaceful uses of nuclear energy. The membership includes electric utilities, manufacturers, architect/engineer/construction firms, service organizations, consult-

ants, uranium producers, radionuclide and radiopharmaceutical suppliers, financial institutions, universities, labor unions, government agencies and research laboratories.

Unless this Court reaches the merits, reverses the Ninth Circuit's decision and restores the congressionally-determined balance between federal and state interests in the regulation of nuclear facilities, continued progress in the development of nuclear power as an energy option will, as a practical matter, be outlawed in California and every jurisdiction that follows its lead. The Ninth Circuit's decision will encourage additional, burdensome and unnecessary state regulation of existing nuclear facilities, endangering the level of nuclear development thus far achieved. Until this Court speaks to the proper accommodation of the competing governmental interests, the congressional program will be thwarted and the nuclear industry will be exposed to the already apparent centrifugal state and local forces which are encouraged under the Court of Appeals' ruling.

State prohibitions on nuclear development have serious consequences for the Forum's members. One hundred and five of the Forum's 122 domestic electric operating utility members rely on, or plan in the future to rely on, nuclear power generation for at least a portion of their power needs. State and local moratoria on nuclear development will also be a severe blow to Forum members involved in all phases of construction and operation of nuclear facilities at each stage of the fuel cycle. Although the future of atomic energy is of vital concern to the nuclear industry, that is, of course, only a small part of the picture. The continued availability of the nuclear option is vital to the entire Nation as a means—with other energy sources that are or may become available—of reducing domestic vulnerability to undependable foreign sources of oil and gas. California's legislation disregards these larger considerations.

STATUTES INVOLVED

Section 25524.1(b) of the California Public Resources Code provides in pertinent part:

> [Before permitting construction of new nuclear plants the California Energy Resources Conservation and Development] [C]ommission shall . . . find on a case-by-case basis that facilities with adequate capacity to reprocess nuclear fuel rods from [the proposed] facility or to store such fuel if such storage is approved by an authorized agency of the United States are in actual operation or will be in operation at the time such nuclear facility requires such reprocessing or storage; provided, however, that such storage of fuel is in an offsite location to the extent necessary to provide continuous onsite full core reserve storage capacity.

Section 25524.2 of the California Public Resources Code provides in pertinent part:

> No nuclear fission thermal powerplant, including any to which the provisions of this chapter do not otherwise apply, but excepting those exempted herein, shall be permitted land use in the state, or where applicable, be certified by the commission until both conditions (a) and (b) have been met:
>
> (a) The commission finds that there has been developed and that the United States through its authorized agency has approved and there exists a demonstrated technology or means for the disposal of high-level nuclear waste.
>
> (b) The commission has reported its findings and the reasons therefor pursuant to paragraph (a) to the Legislature. Such reports of findings shall be assigned to appropriate policy committees for review. The commission may proceed to certify nuclear fission thermal powerplants 100 legislative days after reporting its findings unless within those 100 legislative days either house of the Legislature adopts by a majority vote of its members a resolution disaffirm-

ing the findings of the commission made pursuant to paragraph (a).

A resolution of disaffirmance shall set forth the reasons for the action and shall provide to the extent possible, guidance to the commission as to an appropriate method of bringing the commission's findings into conformance with paragraph (a).

If a disaffirming resolution is adopted, the commission shall reexamine its original findings consistent with matters raised in the resolution. On conclusion of its reexamination, the commission shall reduce its findings to writing with the reasons therefor and shall transmit them to the Legislature.

If the findings are that the conditions of paragraph (a) have been met, the commission may proceed to certify nuclear fission thermal powerplants 100 legislative days after reporting its findings to the Legislature unless within those 100 legislative days both houses of the Legislature act by statute to declare the findings null and void and take appropriate action.

To allow sufficient time for the Legislature to act, the reports of findings of the commission shall be submitted to the Legislature at least six calendar months prior to the adjournment of the Legislature sine die.

Section 274(c) of the Atomic Energy Act of 1954, 42 U.S.C. § 2021(c) (1976 & Supp. IV 1980), provides:

(c) No agreement [with a state allowing state regulation of low-level nuclear materials] shall provide for discontinuance of any authority and the Commission shall retain authority and responsibility with respect to regulation of—

(1) the construction and operation of any production or utilization facility;

(2) the export from or import into the United States of byproduct, source, or special nuclear material, or of any production or utilization facility;

> (3) the disposal into the ocean or sea of byproduct, source, or special nuclear waste materials as defined in regulations or orders of the Commission;
>
> (4) the disposal of such other byproduct, source, or special nuclear material as the Commission determines by regulation or order should, because of the hazards or potential hazards thereof, not be so disposed of without a license from the Commission . . . .

Section 274(k) of the Atomic Energy Act of 1954, 42 U.S.C. § 2021(k) (1976), provides:

> Nothing in this section shall be construed to affect the authority of any State or local agency to regulate activities for purposes other than protection against radiation hazards.

STATEMENT

This Court has granted certiorari to decide whether challenges to two provisions added in 1976 to California's Warren-Alquist State Energy Resources Conservation and Development Act, which effectively forbid the construction of new nuclear powerplants, Cal. Pub. Res. Code §§ 25524.1(b) and 25524.2 (West 1977), are ripe for review and whether the provisions are preempted by the Atomic Energy Act of 1954. 42 U.S.C. §§ 2011 *et seq.* (1976 & Supp. IV 1980) ("1954 Act"). Section 25524.1(b) ("the spent fuel provision") provides that before additional nuclear plants may be built, the State Energy Resources and Conservation Commission ("Energy Commission") must determine on a case-by-case basis that there will be either (a) adequate fuel rod reprocessing capacity [1] or (b) adequate capacity to store spent fuel rods so that there will always be "continuous

---

[1] Fuel reprocessing involves recovering unused fissionable material from spent fuel. For a description of the process see *Natural Resources Defense Council, Inc. v. NRC*, 539 F.2d 824, 830-31 (2d Cir. 1976), *vacated and remanded for consideration of mootness sub nom. Westinghouse Electric Corp. v. Natural Resources Defense Council, Inc.*, 434 U.S. 1030 (1978).

onsite full core reserve storage capacity" to accommodate spent fuel.[2] Section 25524.2(a) ("the waste disposal provision") imposes a moratorium on the certification of new nuclear plants until the Energy Commission "finds that there has been developed and that the United States through its authorized agency has approved and there exists a demonstrated technology or means for the disposal of high-level nuclear waste." Such a finding must be reported to the state legislature, which may nullify it. *Id.* § 25524.2(b).

In 1977, the Legislative Counsel of California held that these and another section of the Warren-Alquist Act were preempted. *See* 61 Ops. Cal. Att'y Gen. 159, 173 n.39 (1978), [1964-1981 Transfer Binder] Nuclear Reg. Rep. (CCH) ¶ 20,088, at 16,532 n.39 (Apr. 25, 1978). The Attorney General of California reached the same conclusion in an able opinion the following year. *Id.*

Pacific Gas and Electric Company ("PG&E") and Southern California Edison Company ("SCE") challenged the spent fuel, waste disposal and other provisions of the legislation on the ground that they are preempted by the 1954 Act. The district court granted summary

---

[2] It is not clear whether the ripeness part of the grant of certiorari, by mentioning the storage aspect, was intended to preclude consideration of the remainder of § 25524.1(b), since the preemption part of the grant seems to imply that the provision in its entirety is before the Court. The reprocessing clause presents, if anything, a stronger case for preemption than does the storage clause. In addition to being squarely within the regulatory sphere of the federal government, *e.g.*, 10 C.F.R. § 50.2(a)(3) (1982) (reprocessing plants subjected to domestic facility licensing requirements), this phase of the nuclear fuel cycle has significant international implications which are inextricably linked with the foreign relations power, for which the federal government bears sole responsibility. *See generally* Nuclear Non-Proliferation Act of 1978, 22 U.S.C. §§ 3201 *et seq.* (Supp. IV 1980); *Zschernig v. Miller*, 389 U.S. 429 (1968); *Hines v. Davidowitz*, 312 U.S. 52 (1941).

judgment for the utilities, Pet. App. 55-64; 489 F. Supp. 699 (E.D. Cal. 1980), and the Energy Commission appealed.

The Ninth Circuit reversed. Pet. App. 1-52; 659 F.2d 903 (9th Cir. 1981). It held that the challenge to the spent fuel provision was not ripe for review because it could not know whether the Energy Commission would ever find spent fuel storage capacity inadequate. Pet. App. 25. The court reached the merits of the waste disposal provision, but held that it was not preempted. The Court of Appeals acknowledged that the 1954 Act preempts state regulation of radiological hazards, *id.* at 35, but accepted the state's characterization of the waste disposal moratorium as a financial regulation based on the state's "uncertainty" regarding nuclear energy due to the lack of a federally approved method for permanent nuclear waste disposal. *Id.* at 37-40. The court also relied on a collage of post-1954 federal legislation granting the states limited authority to regulate certain radiation hazards and encouraging other energy sources to conclude that the California moratorium did not conflict with congressional policy. *Id.* at 42-46.

SUMMARY OF ARGUMENT

The challenges to California's spent fuel and waste disposal provisions are ripe for review. Both provisions are preempted because they intrude on an area pervasively regulated by the federal government and thwart the congressional policy to encourage the development of nuclear power.

Ripeness. The Ninth Circuit correctly held that the challenge to California's waste disposal provision is ripe for review. Given the large investment of time and money needed to develop plans and prepare a license application for a nuclar plant, that section poses a present barrier to the development of nuclear power. Moreover, the merits issue—the constitutionality of the provi-

sion—would ripen no further if review were delayed. A failure to decide the issue now would amount to a decision on the merits against the utilities. The same factors apply with equal force to the challenge to the spent fuel provision.

Preemption. The 1954 Act generally preempts state regulation with respect to radiation hazards. The preempted area includes radiological health and safety aspects of storage and disposal of special nuclear material used in nuclear power plants. When viewed in the context of their legislative history and the state's overall utility regulatory scheme, the waste disposal and spent fuel provisions clearly regulate for radiological health and safety purposes. The Court of Appeals erred by accepting at face value the state's protestations to the contrary.

The provisions usurp federal authority in each area they touch. Evidently unwilling to accept current federal regulation as adequate assurance of proper storage and waste disposal, the state seeks to halt nuclear development until the Nuclear Regulatory Commission ("NRC") imposes standards satisfactory to the state. In essence, California would overrule both the NRC's technical judgment and Congress' policy judgment. Such a posture is fundamentally inimical to the architecture of our federal system.

ARGUMENT

I.

THE CHALLENGES TO THE SPENT FUEL AND WASTE DISPOSAL PROVISIONS ARE RIPE FOR REVIEW

The Ninth Circuit correctly held that the utilities' challenge to the waste disposal provision was ripe for review. It erred, however, by reaching the opposite conclusion with respect to the spent fuel provision. For ripeness purposes, the two stand on an equal footing.

In *Abbott Laboratories v. Gardner*, 387 U.S. 136 (1967), this Court summarized the ripeness doctrine as follows:

> . . . it is fair to say that its basic rationale is to prevent the courts, through avoidance of premature adjudication, from entangling themselves in abstract disagreements over administrative policies, and also to protect the agencies from judicial interference until an administrative decision has been formalized and its effects felt in a concrete way by the challenging parties. The problem is best seen in a two-fold aspect, requiring us to evaluate both the fitness of the issues for judicial decision and the hardship to the parties of withholding court consideration. *Id.* at 148-49.

Professor Davis has distilled the doctrine even further, suggesting that the "key idea" is that "[c]ontroversies are ripe for judicial determination when the legal issues are appropriate for courts to decide and when hardship to private parties from lack of decision is substantial." K. Davis, *Administrative Law Treatise* § 21.00, at 305-06 (Supp. 1982). The need for further factual development has also been suggested as a factor in determining ripeness. *Regional Rail Reorganization Act Cases*, 419 U.S. 102, 143-48 (1974). By any of these standards, the utilities' challenges to the two provisions of California law as to which certiorari has been granted are ripe.

The utilities' challenge to the waste disposal provision is ripe for review because that provision erects a present barrier to the development of nuclear power in California. Whether the state may constitutionally exercise such authority presents a purely legal issue and the Court's "ability to deal with it would not be enhanced" by delay of review. Pet. App. 26; *Duke Power Co. v. Carolina Environmental Study Group, Inc.*, 438 U.S. 59, 81-82 (1978).

Furthermore, as the Court of Appeals emphasized:

> Postponement could . . . work substantial hardship on the utilities. On the one hand, they could proceed with their plans in the hopes that, when the time for certification came, either the required findings would be made or the law would be struck down. This would require massive expenditures over a number of years, expenditures that quite possibly could not be recovered unless the plant were eventually certified. Alternatively, the utilities could abandon their plans to use nuclear power, with the result that no challenge to section 25524.2 would ever be ripe. Pet. App. 26.

This assessment is demonstrably correct. It takes from 12 to 14 years from the time a decision is made to build a nuclear plant until commercial operation may begin. *Id.* at 71. A utility must invest years of effort and millions of dollars merely to prepare a license application for a nuclear plant. *Id.* at 71-72. Plans and purchases of major plant equipment must be made years in advance if a plant is to be available when needed. *Id.* PG&E began planning the Stanislaus project in the early 1970's. By the time the Energy Commission "returned" PG&E's Notice of Intention, *id.* at 221, the utility had expended at least $10 million on the project. *Id.* at 72. SCE had planned to participate in building two other nuclear power plants that were scheduled to be operational in 1994 and 1995. *Id.* at 75. Each utility cancelled its plans on the understandable basis that the waste disposal moratorium and other provisions of the Warren-Alquist Act made it impossible to proceed. *Id.* at 73-76.[3]

If the utilities' challenge to the waste disposal provision were not deemed ripe, they would be forced either to put aside their constitutional objection or to commit

---

[3] The utilities also suffer a present harm as a result of the cloud California's legislation impliedly casts over the safety of activities that meet federal requirements. Public confidence is every bit as important to the nuclear industry as it was to the drug industry in *Abbott Laboratories*. *See* 387 U.S. at 153.

vast sums for the purpose of shaping a test case. If all that were necessary to structure such a case was a trivial investment by the petitioners, *cf. Evers v. Dwyer*, 358 U.S. 202, 203 (1958) (per curiam) (bus integration plaintiff rode only once for purpose of instituting litigation), one might be tempted to decline consideration of the merits at this time. Here, however, the industrial and commercial setting is such that there is no such thing as a small investment. A future test case necessitated by a ruling that the utilities' challenges were not yet ripe would cost millions, ultimately payable, in all probability, by the ratepayers. Such a case, while by no means improper, *see generally* 13 C. Wright, A. Miller & E. Cooper, *Federal Practice and Procedure: Jurisdiction* § 3530, at 170-75 (1975 & Supp. 1981) (collecting cases), might end up as a waste of resources, and would bring the substantive issues into no sharper focus. Requiring utility investment only for the purpose of securing a forum for the ventilation of a constitutional claim would do little to advance public respect for the law. And as a practical matter, a refusal to hear the utilities now would have the same effect as a decision sustaining the waste disposal provision on the merits, *see* L. Tribe, *American Constitutional Law* ch. 3, at 14-15 (Supp. 1979), since, like the regulation in issue in *Super Tire Engineering Co. v. McCorkle*, 416 U.S. 115, 122 (1974), the measure would remain a "continuing and brooding presence" among California's statutes.

The Ninth Circuit erred by not applying the same principles when it ruled on the ripeness of the utilities' challenge to the spent fuel provision. Despite its holding that the utilities have standing to challenge that provision, Pet. App. 18-19, the Court of Appeals concluded that the challenge was not ripe because the court could not know "whether the Energy Commission would ever find a nuclear plant's storage capacity to be inadequate." *Id.* at 25. This misconceives the question, since the issue on the merits is whether California may constitutionally

condition the licensing of a nuclear plant on its "case-by-case" judgment concerning spent fuel storage capacity. That issue will ripen no further by actual exercise of the disputed authority. Judicial review is completely proper for addressing the constitutional issue where the case is in this posture. *Public Utilities Commission of California v. United States*, 355 U.S. 534, 540 (1958). Because the utilities are inescapably subject to the California statutes, they should not be required to invoke and exhaust the administrative procedures as a precondition to resolution of their challenge to the validity of the statutes. *Railroad Transfer Service, Inc. v. City of Chicago*, 386 U.S. 351, 358 (1967); *City of Chicago v. Atchison, T. & S.F. Ry. Co.*, 357 U.S. 77, 84 (1958).

To permit the ripeness doctrine to block consideration of the constitutionality of the spent fuel provision would, as a practical matter, insulate such measures from review in the federal courts, despite their present chilling effect on the conduct of affairs. If the utilities are not allowed to challenge the provision now, the result, as is the case with the waste disposal section, will be the same as a decision sustaining the provision on the merits.

II.

THE SPENT FUEL STORAGE AND WASTE DISPOSAL PROVISIONS IMPERMISSIBLY INTRUDE ON AN AREA PREEMPTED BY THE ATOMIC ENERGY ACT AND THWART FEDERAL POLICY TO ENCOURAGE NUCLEAR DEVELOPMENT

A.

The Federal Government is Still Exclusively Responsible for Regulation of Spent Fuel Storage and Nuclear Waste Disposal

1. *The Federal Regulatory Monopoly and the Role of the States.* The Atomic Energy Act of 1946, 60 Stat. 755, created a federal monopoly over the use, control and ownership of nuclear technology. The states and the private

sector were totally excluded from the nuclear field. Since that time, state authority to regulate limited aspects of nuclear energy has emerged only to the extent specifically permitted by Congress.

The 1954 Act relaxed the federal monopoly to the limited extent necessary to afford private industry an opportunity to develop nuclear technology. In it, however, Congress maintained complete federal regulatory control over nuclear facilities and materials. The Atomic Energy Commission ("AEC") was given exclusive jurisdiction to license the transfer, delivery, receipt, acquisition, possession and use of nuclear materials whether or not used in interstate commerce. 42 U.S.C. §§ 2014(e), (z), (aa), 2061-64, 2071-78, 2091-99, 2111-14 (1976 & Supp. IV 1980). The 1954 Act also established a complex two-step system for licensing civilian-owned nuclear facilities. Federal regulation of atomic energy remains one of the most pervasive regulatory programs ever enacted. *See Vermont Yankee Nuclear Power Corp. v. Natural Resources Defense Council, Inc.*, 435 U.S. 519, 525-27 (1978).

In 1959, Congress for the first time permitted the states to assume some authority over byproduct, source and low-level special nuclear materials through cooperative agreements with the federal government. 42 U.S.C. § 2021 (1976 & Supp. IV 1980). State regulation, however, must be compatible with federal regulation. *Id.* Moreover, the NRC retains authority over non-health and safety regulation of low-level nuclear materials subject to cooperative agreements. And the federal government may terminate a state agreement if it believes health and safety are not adequately protected. *Id.* § 2021(j). In effect, the states act as agents of the federal government in implementing what is essentially a federal program. *See* 105 Cong. Rec. 8385 (1959).[4]

---

[4] The states may and generally do participate fully in the federal regulatory process, even though they may well lack the staff depth

Notwithstanding this narrowly circumscribed grant of authority to the states, the federal government retained exclusive authority to regulate the construction and operation of nuclear plants as well as the storage and disposal of nuclear materials that the NRC determines are sufficiently hazardous as to require continued federal regulatory control. 42 U.S.C. § 2021(c)(1), (4) (1976 & Supp. IV 1980); S. Rep. No. 870, 86th Cong., 1st Sess. 4, 8-9 (1959). Included within these preempted areas are

> [s]uch activities [as] . . . the possession and storage at the site of the licensed activity of nuclear fuel and of source, special nuclear material and byproduct materials used or produced in the operation of the facility; the transportation of nuclear fuels to and from the reactor site; and the discharge of effluent from the facility.

105 Cong. Rec. 8384 (1959) (AEC analysis of provision which ultimately became 42 U.S.C. § 2021(c) (1976 & Supp. IV 1980)). The "[l]icensing and regulation of more dangerous activities—such as nuclear reactors . . . remain[s] the exclusive responsibility of the [federal government]." S. Rep. No. 870, 86th Cong., 1st Sess. 8 (1959).

In the 1954 Act, and thereafter, Congress carefully preserved the authority of state and local governments

---

necessary to address the more technical issues of radiological safety. During each phase of a project licensing proceeding, interested states are permitted to participate as a matter of right. 10 C.F.R. § 2.715(c) (1982). Participation as of right has not been limited to the site location state or even adjacent states. Thus, the Energy Commission itself, relying on the fuel storage provision here in issue, participated in a licensing proceeding for a fuel cycle facility as far away as Tennessee. *Exxon Nuclear Co. (Nuclear Fuel Recovery and Recycling Center)*, 6 N.R.C. 873 (App. Bd. 1977). States are also accorded ample opportunity to contribute to the environmental review of nuclear power plant construction and operation under the National Environmental Policy Act of 1969. 42 U.S.C. §§ 4321 *et seq.* (1976 & Supp. IV 1980); 10 C.F.R. §§ 51.23, 51.24(c)(3), 51.26(c) (1982).

to regulate electricity generated by nuclear power plants just as they regulate electricity produced by other means. 42 U.S.C. § 2018 (1976 & Supp. IV 1980); 100 Cong. Rec. 12015 (1954) (remarks of Sens. Hickenlooper and Humphrey); H.R. Rep. No. 567, 89th Cong., 1st Sess. 4 (1965), *reprinted in* 1965 U.S. Code Cong. & Ad. News 2775, 2779. The states may also exercise their traditional police powers—even in ways that peripherally affect preempted areas—provided they do so for purposes other than protection against radiation hazards. 42 U.S.C. § 2021(k) (1976). But Congress

> did not intend to leave any room for the exercise of concurrent jurisdiction by the States to control radiation hazards from those materials. [Its] sole purpose was to leave room for [state laws] dealing with matters on the fringe of the preempted area in light of all the provisions and purposes of the Atomic Energy Act . . . . *Federal-State Relationships in the Atomic Energy Field: Hearings Before the Joint Comm. on Atomic Energy*, 86th Cong., 1st Sess. 500 (1959) (*"1959 Hearings"*); *see also* S. Rep. No. 870, *supra*, at 9.

As the Ninth Circuit acknowledged, Pet. App. 32, Congress vested sole authority to regulate radiation hazards in the NRC except as otherwise specifically provided by federal law. *Northern States Power Co. v. Minnesota*, 447 F.2d 1143, 1147 (8th Cir. 1971), *aff'd mem.*, 405 U.S. 1035 (1972), *construing* 42 U.S.C. § 2021 (1976 & Supp. IV 1980); *see also Train v. Colorado Public Interest Research Group, Inc.*, 426 U.S. 1, 15-16 (1976). For this reason it has been held that a state may neither refuse to accept spent nuclear fuel for storage within its boundaries, nor impose its own standards on the storage or shipment for storage of spent nuclear fuel whether interstate or intrastate. *Illinois v. General Electric Co.*, 2 Nuclear Reg. Rep. (CCH) ¶ 20,229, at 17,481 (7th Cir. July 13, 1982); *see also Washington State Building and Construction Trades Council, AFL-CIO v. Spellman*, 518

F. Supp. 928, 931-32 (E.D. Wash. 1981), *aff'd*, No. 81-3453 (9th Cir. Aug. 17, 1982).

2. *The Federal Goal of Nuclear Development.* It was suggested below that the states' exclusion from the regulatory arena has been eroded by subsequent legislative developments suggesting a decline in congressional interest in the development of nuclear energy as a power source. Pet. App. 43-45. This notion confuses the legislative process with the accretive growth characteristic of the common law method of deciding cases. Congress has not changed national policy regarding the desirability of fostering nuclear power, but even if it has, that would neither expand state powers nor disturb the current division of regulatory responsibilities except to the extent specifically provided by statute.

The 1954 Act advances the important federal interest of seeking "to encourage widespread participation in the development and utilization of atomic energy for peaceful purposes to the maximum extent consistent with the common defense and security and with the health and safety of the public." 42 U.S.C. § 2013(d) (1976). Congress intended that "the development, use, and control of atomic energy shall be directed so as to make the maximum contribution to the general welfare. . . ." *Id.* § 2011. It viewed the "development, utilization and control of atomic energy for military *and for all other purposes*" as "vital to the common defense and security" of the country. *Id.* § 2012(a) (emphasis added). Thus, Congress established "a program of conducting, assisting, and fostering research and development in order to encourage maximum scientific and industrial progress," *id.* § 2013(a), subject to "a program for Government control of the possession, use, and production of atomic energy and special nuclear material, whether owned by the Government or others, so directed as to make the maximum contribution to the common defense and security and the national welfare . . . ." *Id.* § 2013(c);

see also S. Rep. No. 1699, 83d Cong. 2d Sess. 1-4 (1954).[5]

Subsequent legislation has not altered these policies.[6] Congress reaffirmed the importance of nuclear development by enacting the Price-Anderson Act in 1957, 42 U.S.C. § 2210 (1976 & Supp. IV 1980). That measure "had the dual purpose of 'protect[ing] the public . . . and encourag[ing] the development of the atomic energy industry.'" 42 U.S.C. § 2012(i) (1976), *quoted in Duke Power Co.*, 438 U.S. at 64. Continued congressional interest in further nuclear development was shown by the extensions of the Price-Anderson Act passed in 1965, Pub. L. No. 89-210, 79 Stat. 855 (1965), and 1975, Pub. L. No. 94-197, 89 Stat. 1111 (1975). *See, e.g.*, S. Rep. No. 650, 89th Cong., 1st Sess. 7-8 (1965), *reprinted in* 1965 U.S. Code Cong. & Ad. News 3209, 3215-16.

The Energy Reorganization Act of 1974, cited in this regard by the Court of Appeals, Pet. App. 43, did not

---

[5] Contrary to the Energy Commission's characterization, federal preemption in this case does not rest merely on "general statements" of congressional purpose. Br. in Opp. at 24 n.30. Accordingly, its reliance on *Commonwealth Edison Co. v. Montana*, 453 U.S. 609 (1981), is misplaced. This Court held that "there can be no question that Montana may constitutionally raise general welfare by imposing a severance tax on coal mined in the State," *id.* at 624, and that Congress' desire to encourage use of coal expressed in the Energy Policy and Conservation Act of 1975, 42 U.S.C. § 6201(6) (1976 & Supp. IV 1980), did not demonstrate an intent to preempt all state legislation that might adversely impact on the use of coal. 453 U.S. at 633. In contrast, California's waste storage and disposal provisions do not merely tax nuclear development, they effectively ban it. State taxation stands on a far different footing from regulatory programs such as that administered by the Energy Commission. This case does not call upon the Court to decide whether California could have passed a discriminatory tax on nuclear electric generation.

[6] The President has also emphasized that nuclear energy is essential to the economic well-being of the Nation. President's Statement Announcing a Series of Policy Initiatives, 17 Weekly Comp. Pres. Doc. 1101 (Oct. 8, 1981).

alter the federal purpose. *See* Murphy & LaPierre, *Nuclear "Moratorium" Legislation in the States and the Supremacy Clause: A Case of Express Preemption*, 76 Colum. L. Rev. 392, 409 (1976). The only sections of the 1954 Act that were repealed were those that had established and organized the AEC. 42 U.S.C. §§ 2031, 2032 (1970), *repealed by* Pub. L. No. 93-438, § 104(a), 88 Stat. 1237 (1974). The Federal Nonnuclear Energy Research and Development Act of 1974, 42 U.S.C. §§ 5901-20 (1976 & Supp. IV 1980), underscored Congress' intent that "the policies and provisions of the Atomic Energy Act of 1954 . . . shall continue to apply to the nuclear research, development and demonstration program." *Id.* § 5902(b)(2). The Industrial Fuel Use Act's purpose to "foster the greater use of coal and other alternate (nonpetroleum) fuels" includes uranium and thus reemphasizes the importance of nuclear development for the welfare of the country. 42 U.S.C. § 8302(a)(6)(A), 8401 (Supp. IV 1980). Congress has also granted increased opportunity for state involvement in land use and siting decisions. NRC Appropriation Authorization Act of 1980, Pub. L. No. 96-295, § 108(f), 94 Stat. 780 (1980).

Under the Clean Air Act, states may regulate radioactive emissions to the extent that the Environmental Protection Agency lists radioactive materials as pollutants. 42 U.S.C. §§ 7416, 7422 (Supp. IV 1980). The state and the Ninth Circuit find support for the spent fuel and waste disposal provisions in this narrow grant of authority to the states to regulate air pollution in the form of radiation. Br. in Opp. 21, 25; Pet. App. 44-45. This suggestion should not be entertained because the Clean Air Act does not purport to limit the federal government's preemptive authority in the areas of waste storage and disposal regulation. *Illinois v. General Electric Co.*, 2 Nuclear Reg. Rep. (CCH) ¶ 20,229, at 17,481-2. Moreover, there is nothing in the record other than the Energy Commission's post hoc suggestions that California's spent fuel and waste provisions were intended to

regulate air pollution. As the Seventh Circuit noted, Congress could not have intended by the Clean Air Act Amendments to give

> the states . . . carte blanche to enact any statutes, and promulgate any regulations, that might as a side-effect reduce the amount of radioactive emissions in the state, regardless of how much the statute or regulation disrupted the federal atomic energy program, which includes . . . a program for disposing of nuclear wastes. That would be too much to read into those amendments. *Id.* at 17,482.

These enactments only reinforce the general rule of preemption and the fact that it is Congress' role, not that of the courts, to enlarge state authority. Where Congress has proceeded with measured tread in allowing the states a limited role in an area pervasively regulated by an expert federal agency, it is senseless to add up the occasional legislative changes, as if on a scorecard, in the hope of discerning some "trend" to grant the states a power Congress has chosen to withhold. Judicial decisions may be organized into lines of cases or "trends"; Acts of Congress do not change shape in this fashion. *Cf. St. Martin Evangelical Lutheran Church v. South Dakota*, 451 U.S. 772, 787-88 (1981) (repeal or amendment by implication disfavored).

B.

The Spent Fuel and Waste Disposal Provisions are a Transparent Attempt to Regulate Radiological Health and Safety

California's assertion that the disputed provisions of its law were not intended to regulate radiation hazards, but merely constitute economic regulation, should have been dismissed by the Court of Appeals. A review of the provisions' legislative history as well as their regulatory context and implementation makes clear that they were intended to outlaw nuclear development by imposing powerful deterrents to planning new nuclear facilities. No reason for these provisions exists except distrust of cur-

rent and future federal regulation of spent fuel storage and waste disposal. This Court has in the past given short shrift to litigants' assumptions that the responsible federal officials "cannot be counted on" to do their job properly. *Power Reactor Development Co. v. Int'l Union of Electrical Workers*, 367 U.S. 396, 415 (1961). The only difference is that, in this case, California has gone to the trouble of inscribing that assumption in its statute book.

The Ninth Circuit's assessment of the purpose of California's legislation was seriously deficient. It accepted at face value the state's claim that its legislation was not enacted for the purpose of regulating radiation hazards, but rather because of economic concerns related to the reliability of nuclear energy. A single legislative committee report was relied on by the Court of Appeals to reach this conclusion. Pet. App. 40. In a classic negative pregnant, the report states that "[w]aste disposal *safety* [was] not *directly* addressed by the [provisions]." *Id.* (second emphasis added). It is obvious that even in the legislature's eyes the law was aimed—albeit indirectly—at regulating radiation hazards associated with nuclear waste.

Even if the legislative committee report had stated what California now claims to have been its objective, the provisions and their implementation must still be examined to determine whether the state is actually attempting to regulate a preempted area. A state may not nullify "unwanted federal legislation by simply publishing a legislative committee report articulating some state interest or policy—other than frustration of the federal objective—that would be tangentially furthered by the proposed state law." *Perez v. Campbell*, 402 U.S. 637, 652 (1971). Here, there is no evidence other than ambiguous statements in the legislative committee's report that the state intended the laws to be financial or economic regulation. The evidence demonstrates that California's concern was radiological health and safety, not economics or financial "uncertainty."

1. *Genesis of the Nuclear Laws.* The nuclear laws are a striking departure from prior California utility regulation in that they single out nuclear energy. As originally enacted, the bills provided that the nuclear laws would not become operative if a referendum commonly referred to as "Proposition 15" were approved. 1976 Cal. Stat. ch. 196, § 2; Cal. Pub. Res. Code § 25524.2 (West 1977) (Historical Note). As the Court of Appeals acknowledged, Pet. App. 37-39, the purpose of Proposition 15 was to limit radiation hazards. Had it not been defeated at the polls, Proposition 15 would have barred nuclear plants from being certified unless the liability limit in the Price-Anderson Act was removed, and the legislature determined that (a) reactor safety systems were adequate and (b) nuclear waste could be stored safely. *Id.* at 37. Under Proposition 15, further nuclear development would plainly have been halted. The referendum made no pretense of being based on economic regulatory concerns. Since the nuclear laws were intended to take the place of Proposition 15, one can only assume they were intended to serve the same purpose.

2. *The Nuclear Laws as a Whole.* Although this Court has limited its review to only two of the challenged provisions of California's nuclear laws, the other portions of the state's legislative program continue to be highly relevant for the purpose of discerning what California was attempting to achieve by the provisions under review. *See, e.g., Kokoszka v. Belford*, 417 U.S. 642, 650 (1974), *quoting Brown v. Duchesne*, 60 U.S. (19 How.) 183, 194 (1857). When read together and with other provisions of the California Public Resources Code, the nuclear laws evince an unmistakable intent to limit radiation hazards. Section 25524.3 required the Energy Commission to issue a report intended to help determine whether undergrounding or berm containment of nuclear plants is ". . . necessary, effective or economically feasible to meet the requirements of Sections 25511 and 25520." Cal. Pub. Res. Code § 25524.3(a) (West 1977). These sections pertain to the enhancement of public

health and safety.[7] A provision singling out nuclear facilities because of health and safety reasons can only be directed at a perceived danger unique to nuclear facilities, *viz.* radiation hazards. Regulation of radiation hazards, however, is preempted by the 1954 Act. *Train v. Colorado Public Interest Group, Inc.*, 426 U.S. at 16; *Illinois v. General Electric Co.*, 2 Nuclear Reg. Rep. (CCH) ¶ 20,229, at 17,481; *Northern States*, 447 F.2d at 1149-54.

3. *California's Preexisting Economic Regulatory Program.* The disputed provisions do nothing to further the state's purported interest in sound financial management. The regulatory structure in place before their passage in 1976 allowed the state to determine the financial and

---

[7] Section 25511 states:

> *Safety and reliability factors; information required; analysis; findings.* The commission shall review the factors related to safety and reliability of the facilities at each of the alternative sites designated in the notice. In addition to other information requested of the applicant, the commission shall, in determining the appropriateness of sites and related facilities, require detailed information on proposed emergency systems and safety precautions, plans for transport, handling and storage of wastes and fuels, proposed methods to prevent illegal diversion of nuclear fuels, special design features to account for seismic and other potential hazards, proposed methods to control density of population in areas surrounding nuclear powerplants, and such other information as the commission may determine to be relevant to the reliability and safety of the facility at the proposed sites. The commission shall analyze the information provided by the applicant, supplementing it, where necessary, by onsite investigations and other studies. The commission shall determine the adequacy of measures proposed by the applicant to protect public health and safety, and shall include its findings in the . . . final report required by Section . . . 25514. Cal. Pub. Res. Code § 25511 (West Supp. 1982).

Section 25520 sets forth the requirements for an application for the certification of a site and related facility. Among other things, the application must include "[s]afety and reliability information, including, in addition to documentation previously provided pursuant to Section 25511, planned provisions for emergency operations and shutdowns." Cal. Pub. Res. Code § 25520 (West 1977).

economic soundness of any proposed plant. The Energy Commission administers a comprehensive program for review and evaluation of proposed plants, including consideration of economic, technological, and environmental aspects of any plant proposal. Cal. Pub. Res. Code § 25504 (West 1977). The Energy Commission must seek the views of the Public Utility Commission ("PUC") concerning the economics of any proposed plant, including ". . . recommendations regarding the design, operation, and location of the [proposed] facilities in relation to the economic, financial, rate, system reliability, and service implications of the . . . facilities." *Id.* § 25506.5. The ultimate decision with respect to whether a proposed facility will receive a certificate of public convenience and necessity remains with the PUC, and the Energy Commission's findings appear not to relieve the PUC of the duty to evaluate the economic issues. *See* Cal. Pub. Util. Code §§ 1001-02 (West Supp. 1982). In addition, new plant decisions are, as they have long been, subject to economic examination by the PUC in determining rates under the state's "just and reasonable" standard. *Id.* § 451 (West Supp. 1982).

Thus, under the preexisting scheme California might have pursued a financially-oriented inquiry into waste storage and disposal for conventional as well as nuclear plants. Whether or not regulation of nuclear waste in that manner would also have been unconstitutional, the fact that California went beyond its existing regulatory scheme and singled out nuclear plants removes any doubt that the state's purpose is to outlaw or materially impede the development of nuclear energy. California's nuclear laws would have been superfluous if they were merely financial or economic regulatory measures. It is, however, improper to impute a useless act to any legislature. *See, e.g., Jackson v. Kelly*, 557 F.2d 735, 740 (10th Cir. 1977); *Continental Illinois Nat'l Bank & Trust Co. of Chicago v. United States*, 185 Ct. Cl. 642, 403 F.2d 721, 724 (1968), *cert. denied*, 394 U.S. 973 (1969).

4. *Absence of a Requirement for Cost-Effectiveness.* The purpose of the provisions is also disclosed by the absence of any requirement that the Energy Commission or legislature make findings on whether waste disposal or spent fuel reprocessing or storage would be economical or cost-effective. Rather, taken as a whole, the provisions permit the Energy Commission and the legislature to substitute their judgment for that of the federal government concerning the existence of permanent waste disposal technology and adequate spent fuel storage capacity. The state must not only determine whether a federal plan for permanent waste disposal has been adopted; it must also determine to its own satisfaction whether there exists a *demonstrated* waste disposal technology.[8] Economic considerations appear not to play a role in this determination.

5. *Administrative Implementation.* Finally, "the relationship between state and federal laws as they are interpreted and applied, not merely as they are written," must be considered. *Jones v. Rath Packing Co.*, 430 U.S. 519, 526 (1977). Here, the administrative gloss applied to the Notice of Intention provisions, Cal. Pub. Res. Code §§ 25502 *et seq.* (West 1977 & Supp. 1982), amply confirms that the legislation (including the spent fuel and waste disposal provisions) was aimed directly at ensuring radiological health and safety. Pet. App. 22-23. An interest in nuclear safety permeates the Energy Commission's implementing regulations.[9] In its letter reject-

[8] The Ninth Circuit stated that "[i]t is not clear whether [the waste disposal] provision would permit California to disapprove a method of waste disposal that the NRC has approved." Pet. App. 40 n.35. The plain words of the statute, however, allow not only the legislature, but the Energy Commission to determine whether the technology needed for waste disposal exists.

[9] The Energy Commission's Notice of Intention regulations demand, among other things, a summary of the plant's "safety . . . systems," Cal. Admin. Code, tit. 20, R. 1720, App. A, § (c)(3) (1979); a "preliminary description of any fuels, . . . wastes, or other toxic or hazardous substances associated with the proposed facility

ing PG&E's Notice of Intention for the construction of the Stanislaus Nuclear Project, the Energy Commission summarized specific areas of health and safety in which it had found the submission deficient. *Id.* at 221-37. Information concerning the adequacy of spent fuel storage in terms of the potential for accidents, loss of fuel cladding integrity, sabotage and seismic damage was specifically required. *Id.* at 224. Particular reference was made to radiological health effects. *Id.* at 224-25. Similarly, the Energy Commission's Data Adequacy Report, *id.* at 241-82, required PG&E to provide extensive information concerning radiation emissions, fuel storage and handling, "radiological health effects" and design of the proposed plant's emergency core cooling system, containment, pressure vessel integrity and leakage control between systems containing radioactive materials. *Id.* at

---

which may have an effect on safety and reliability; a discussion of the principal adverse effects of such substances on safety and reliability; and a discussion of the measures proposed or being considered by the applicant to ensure the safe handling, control, storage, removal, or disposal of such substances," *id.* § (f)(1); a "description of the principal emergency systems and safety precautions proposed or being considered by the applicant, and a discussion of the nature of the hazards for which the systems or precautions are provided," *id.* § (f)(4); and a "description of the principal adverse effects on safety and reliability associated with other aspects of the fuel cycle, and which are directly traceable to the proposed facilities." *Id.* § (f)(6).

With particular reference to the spent fuel provision of the Warren-Alquist Act, the regulations require that a Notice of Intention include a description of the facilities upon which the applicant proposes to rely for reprocessing or storage of spent nuclear fuel rods from the nuclear reactor. This description shall include an estimate of the volume of spent fuel generated by the reactor over its design life, the particular technology to be utilized for such storage or reprocessing, the anticipated on- or off-site facilities to be utilized, the date on which those facilities have been or are likely to be licensed and in operation, and the anticipated means of transporting and storing the spent fuel rods after removal from the reactor. *Id.* § (f)(5)(B). The findings the Energy Commission must make under the spent fuel provision are set forth at *id.* R. 1752(i) (1981).

247-56. The Court of Appeals drew no inferences from these Energy Commission demands on PG&E. Obviously, however, they demonstrate not only that the Energy Commission understands its role to include an official interest in radiological safety, but further that that interest goes beyond mere general orientation to the point of deeply enmeshing the state in the very matters for which the NRC bears responsibility.

States rarely broadcast an unconstitutional legislative purpose. The judicial function typically—and in this case—resolves into a sifting of the circumstantial evidence. The Forum submits that the evidence of an improper purpose here is overwhelming.

C.

California is Usurping the NRC's Role

State regulation must be consistent with "the respective federal-state roles intended by Congress." *City of Philadelphia v. New Jersey*, 437 U.S. 617, 621 n.4 (1978); *see also Perez v. Campbell*, 402 U.S. at 651-52. Where, as here, Congress has carved out a limited sphere for state regulation in an area that, from its inception, has been the exclusive regulatory preserve of the federal government, the burden falls on the state to demonstrate that its legislation is permissible. California's moratorium on an industrial activity—such as nuclear power —that the United States not only regulates, but indeed, wishes to encourage fails under this analysis.

Whatever other aspects of the federal nuclear monopoly Congress may have relaxed, the regulation of spent fuel storage and nuclear waste disposal is—as it has been since 1946 — exclusively a federal province. California has usurped this authority by forbidding further nuclear development until federal regulation satisfies the requirements imposed by the state. The exclusivity of federal regulation means that Congress requires uniform standards for the design and construction of nuclear facilities as well as for the storage and disposal of

nuclear materials. For these activities, the states may not impose standards different from those required by the NRC. *See Ray v. Atlantic Richfield Co.*, 435 U.S. 151, 163 (1978); *Northern States*, 447 F.2d at 1153. California, however, prohibits nuclear development until federal regulation conforms with the state's view of the adequacy of spent fuel storage and waste disposal regulation. The Supremacy Clause denies the states the right to legislate solipsistically in an area of intense and active federal interest.

The NRC is authorized to license on-site storage of spent fuel, *see Minnesota v. NRC*, 602 F.2d 412, 419 (D.C. Cir. 1979); *Natural Resources Defense Council, Inc. v. NRC*, 582 F.2d 166, 169 (2d Cir. 1978), and it may license off-site storage facilities. *See Illinois v. General Electric Co.*, 2 Nuclear Reg. Rep. (CCH) ¶ 20,229, at 17,481. Nothing in the 1954 Act requires the NRC to condition nuclear power plant licensing on the development of a method for permanent waste disposal. *Natural Resources Defense Council*, 582 F.2d at 171. Nor does the 1954 Act condition licensing on a state determination that adequate capacity exists for spent fuel storage. These are matters currently and properly left by Congress to the NRC's expert judgment subject to congressional supervision.

Pursuant to Congress' mandate, 42 U.S.C. §§ 2073, 2111 (1976 & Supp. IV 1980), the NRC pervasively regulates the storage of nuclear materials. Spent fuel must be stored at the powerplant site or in a licensed storage installation that satisfies federal design criteria. 10 C.F.R. Pt. 72 (1982). Other disposal methods for high-level waste are prohibited. *Id.* § 72.6. Even cooperative agreement states are explicitly prohibited from licensing spent fuel storage facilities. *Id.* § 72.8.

Nevertheless, California has imposed its own storage and disposal conditions, effectively prohibiting nuclear development until both the Energy Commission and the

legislature are satisfied that adequate spent fuel storage capacity exists. The state has also ordered that no new nuclear plants may be certified until the Energy Commission finds that the federal government has approved and that "there exists a demonstrated technology or means for the disposal of high level nuclear waste." These provisions do not simply regulate matters "on the fringe of the preempted area." *1959 Hearings*, at 500. Rather, they outlaw nuclear development based on the state's distrust of the NRC's regulation. Such distrust is not, in our federal system, a proper basis for legislative self-help such as that engaged in by California.

The state maintains that the

> NRC may continue to license nuclear plants prior to the development of a waste disposal technology in the belief that its safety mandate may be satisfied by the later shutdown of nuclear power plants if such disposal technology cannot be found in time. Br. in Opp. 27.

In the state's view this position is "not necessarily consistent" with the state's responsibility to "assure a dependable and efficient supply of electricity to its people." *Id.*

The state's argument rests on a misstatement of NRC regulatory policy. The NRC has already confirmed that it ". . . would not continue to license reactors if it did not have reasonable confidence that the wastes can and will in due course be disposed of safely." *Natural Resources Defense Council, Denial of Petition for Rulemaking*, 42 Fed. Reg. 34,391, 34,393 (1977), *aff'd, Natural Resources Defense Council, Inc. v. NRC*, 582 F.2d 166, 169 (2d Cir. 1978). A license will be issued only when the agency determines that "safe storage methods are . . . available" and that there is "reasonable assurance that methods of safe permanent disposal of high-level wastes can be available when they are needed." *Id.*; *see also In re Northern States Power Co.*, 7 N.R.C. 41, 49

(App. Bd. 1978), *remanded for rulemaking sub nom. Minnesota v. NRC*, 602 F.2d 412 (D.C. Cir. 1979).

In response to the remand in *Minnesota v. NRC*, the NRC is currently engaged in a generic rulemaking to

> (1) reassess its confidence that safe off-site disposal of radioactive waste from licensed facilities will be available; (2) determine when any such disposal or off-site storage will be available; and (3) if disposal or off-site storage will not be available until after the expiration of the licenses of certain nuclear facilities, determine whether the wastes generated by those facilities can be safely stored on-site until such disposal is available.

44 Fed. Reg. 61,372, 61,373 (1979). Another panel of the same court has imposed a June 30, 1983 time-limit for the completion of this important rulemaking. *Potomac Alliance v. NRC*, 2 Nuclear Reg. Rep. (CCH) ¶ 20,231 (D.C. Cir. July 20, 1982) (per curiam).[10]

In the meantime, the safety implications of spent fuel storage capacity for the duration of a nuclear facility

---

[10] Permanent waste disposal is a high priority federal concern even apart from the NRC rulemaking. The government is developing a disposal technology for spent fuel and high level defense-related military wastes. *See* U.S. Dep't of Energy, *Spent Fuel and Radioactive Waste Inventories and Projections As Of December 31, 1980*, DOE NE 0017, 9-11 (Sept. 1981). Congress is also actively considering related issues. Legislation that would provide for permanent disposal of high level nuclear waste has been passed by the Senate. S. 1662, 97th Cong., 2d Sess. (1982); *see also* H.R. 6598, 97th Cong., 2d Sess. (1982); H.R. 3809, 97th Cong., 2d Sess. (1982); H.R. 5016, 97th Cong., 1st Sess. (1981). Enactment of such legislation would not moot this case since California has, in § 25524.2, reserved the right to determine for itself whether the technology for permanent disposal adopted by the federal government exists and has been "demonstrated." *See* text accompanying note 8 *supra*. Similarly, the spent fuel provision reserves to the Energy Commission the authority to determine on a case-by-case basis whether there will be adequate capacity for spent fuel rod storage, regardless of the existence of federal legislation on the subject.

license continue to be determined in individual licensing proceedings and license amendment proceedings. While the rulemaking proceeding is pending, the NRC has not modified its policy that there must be adequate provision for spent fuel storage for the life of a proposed plant prior to issuing a license. Nor has the NRC retreated from its conclusion that there is adequate assurance that permanent waste disposal will be available when finally needed. The authority to reexamine the NRC's policy lies with the NRC in the pending rulemaking, or with Congress. It does not lie with individual states.

CONCLUSION

For the foregoing reasons, the case should be considered ripe as to both disputed provisions of California law, and each should be invalidated.

Respectfully submitted,

LEONARD M. TROSTEN
Counsel of Record
EUGENE R. FIDELL
DANIEL J. CONWAY
LEBOEUF, LAMB, LEIBY & MACRAE
Suite 1100
1333 New Hampshire Ave., N.W.
Washington, D.C. 20036
(202) 457-7500
Attorneys for Amicus Curiae

LINDA L. HODGE
Staff Counsel
ATOMIC INDUSTRIAL FORUM, INC.
7101 Wisconsin Avenue
Washington, D.C. 20014

September 1982

Amicus Brief

3

Office - Supreme Court, U.S.
FILED
SEP 7 1982
ALEXANDER L. STEVAS,
CLERK

No. 81-1945

IN THE

Supreme Court of the United States

OCTOBER TERM, 1982

PACIFIC GAS AND ELECTRIC COMPANY and SOUTHERN CALIFORNIA EDISON COMPANY,
Petitioners,

vs.

STATE ENERGY RESOURCES CONSERVATION AND DEVELOPMENT COMMISSION, *et al.*,
Respondents.

ON A WRIT OF CERTIORARI TO THE UNITED STATES COURT OF APPEALS FOR THE NINTH CIRCUIT

BRIEF OF HANS A. BETHE, *ET AL.*, MEMBERS OF SCIENTISTS AND ENGINEERS FOR SECURE ENERGY, INC. AND MID-AMERICA LEGAL FOUNDATION AS *AMICI CURIAE* SUPPORTING PETITIONERS

JOHN M. CANNON
SUSAN W. WANAT
Counsel for Amici Curiae

Of Counsel:
ANN P. SHELDON
Mid-America Legal Foundation
Suite 842
20 North Wacker Drive
Chicago, Illinois 60606

Pandick Press Midwest, Inc., Chicago • 454-7600

TABLE OF CONTENTS

	PAGE
INTEREST OF *AMICI CURIAE*	1
SUMMARY OF ARGUMENT	4
ARGUMENT	5
1. The Statutory Scheme of the Atomic Energy Act of 1954 Impliedly Preempts Sections 25524.1(b) and 25524.2 of the Warren-Alquist Act	5
2. Since Sections 25524.1(b) and 25524.2 of the Warren-Alquist Act Impede the Sale and Transfer of Electricity in Interstate Commerce, They are Preempted by the Atomic Energy Act of 1954	9
CONCLUSION	12

TABLE OF AUTHORITIES

	PAGE
Cases	
City of Burbank v. *Lockheed Terminal*, 411 U. S. 624 (1973)	5
Consolidated Rail Corporation v. *ICC*, 646 F. 2d 642 (D. C. Cir. 1981)	8
Florida Lime and Avocado Growers, Inc. v. *Paul*, 373 U. S. 132 (1963)	5
Gibbons v. *Ogden*, 22 U. S. (9 Wheat.) 1 (1824)	6, 9
Hines v. *Davidowitz*, 312 U. S. 52 (1941)	5
Illinois v. *General Electric Company*, Nos. 81-2768 and 81-2778 (7th Cir. July 13, 1982)	10
Northern States Power Co. v. *Minnesota*, 447 F. 2d 1143 (8th Cir. 1971), *aff'd*, 405 U. S. 1035 (1972)	5, 7, 10
Rice v. *Santa Fe Elevator*, 331 U. S. 218 (1947)	5
Pacific Legal Foundation v. *State Energy Resources Conservation and Development Commission*, 659 F. 2d 903 (9th Cir. 1981)	9
United States v. *City of New York*, 463 F. Supp. 604 (S.D.N.Y. 1978)	8
Statutes	
42 U. S. C. § 2011 (1976)	2, 3, 7
42 U. S. C. § 2012 (1976)	10
42 U. S. C. § 2013(c) (1976)	6
42 U. S. C. § 2013(d) (1976)	5
42 U. S. C. § 2018 (Supp. IV 1980)	6
42 U. S. C. § 2021(c) (Supp. IV 1980)	6
Cal. Pub. Res. Code, § 25524.1(b) (West 1977 & Supp. 1980)	*passim*
Cal. Pub. Res. Code, § 25524.2 (West 1977 & Supp. 1980)	*passim*

PAGE

Other

Final Report of the Committee on Nuclear and Alternative Energy Systems, National Research Council 1980, "Energy Transition: 1985-2010"... 7

Report to the American Physical Society by the Study Group on Nuclear Fuel Cycles and Waste Management, *Reviews of Modern Physics*, January, 1978 7

Rothman & Lichter, "Nuclear Energy Debate: Scientists, the Media and the Public," *Public Opinion* (American Enterprise Institute, Washington, D.C., Vol. 5, No. 4, 1982) 3

IN THE

Supreme Court of the United States

OCTOBER TERM, 1982

PACIFIC GAS AND ELECTRIC COMPANY and SOUTHERN CALIFORNIA EDISON COMPANY,

Petitioners,

vs.

STATE ENERGY RESOURCES CONSERVATION AND DEVELOPMENT COMMISSION, *et al.*,

Respondents.

ON A WRIT OF CERTIORARI TO THE
UNITED STATES COURT OF APPEALS
FOR THE NINTH CIRCUIT

BRIEF OF HANS A. BETHE, *ET AL.*, MEMBERS OF SCIENTISTS AND ENGINEERS FOR SECURE ENERGY, INC. AND MID-AMERICA LEGAL FOUNDATION AS *AMICI CURIAE* SUPPORTING PETITIONERS

INTEREST OF *AMICI*

This brief *amici curiae* is submitted on behalf of Hans A. Bethe, *et al.*, Members of Scientists and Engineers for Secure Energy, Inc. ("*Scientists and Engineers*") and Mid-America Legal Foundation ("*Mid-America*"). The written consents of all parties are filed with the Clerk of the Court.

Scientists and Engineers is a New York not-for-profit corporation of over 1,000 faculty members and researchers, including Hans A. Bethe, Leona Libby, John McCarthy, Alan Pasternak, Edward Teller, and Alvin Weinberg, from American colleges and universities, both state and private. Its membership includes many of the nation's leading scientists and engineers, some of whom are Nobel Laureates in the fields of physics and chemistry. The purpose of Scientists and Engineers is to provide courts and administrative agencies with a balanced perspective on national energy issues, including the development and use of nuclear power, by participating in judicial and administrative proceedings.

Mid-America was organized in 1975 as an Illinois not-for-profit corporation to engage in nonpartisan legal research, study, and analysis for the general public as to the effect of evolving concepts of law on our democratic institutions and to provide legal representation on matters of public interest at all levels of the judicial process. Mid-America takes special interest in questions of law on a national scope that originate in or have a direct effect on the mid-America region.

Scientists and Engineers and Mid-America have an interest in this case because the provisions of the Warren-Alquist State Energy Resources Conservation and Development Act *("Warren-Alquist Act")* in question, Cal. Pub. Res. Code, Sections 25524.1(b) and 25524.2 (West 1977 & Supp. 1980) stand as obstacles to the accomplishment and execution of the full purposes and objectives Congress envisioned when it enacted the Atomic Energy Act of 1954, § 264 *et seq.*, 42 U. S. C. § 2011, *et seq.* The effect of these two sections is to bar construction of any new nuclear plants in California under the guise of state concern for the feasibility or cost of permanent nuclear waste disposal.

Scientists and Engineers believes that it is of great significance that an overwhelming majority of all scientists fully support the rapid development and expanded utilization of the

peaceful uses of nuclear power. According to the recent study by Rothman and Lichter, "Nuclear Energy Debate: Scientists, the Media and the Public" appearing in the August-September issue of *Public Opinion,* (American Enterprise Institute, Washington, D.C., Vol. 5, No. 4, 1982), seven out of ten energy experts favor the rapid development of nuclear energy, including 92 percent of scientists in nuclear energy related disciplines. Scientists' confidence in the safety of nuclear energy is indicated by their willingness to locate nuclear plants in the cities where they live. Of those with opinions, almost seven in ten are willing to locate nuclear plants in their own cities, as are 80 percent of energy experts and 98 percent of those in nuclear related fields. *Ibid.*

The Warren-Alquist Act steps beyond the congressional limitations embodied in the Atomic Energy Act to burden interstate commerce by excluding from California a major method of generating power. *Amici* believe that this brief presents an analysis of at least one aspect of the federal law of preemption which is not presented by the parties. If this legislation is allowed to stand, it could open floodgates for similar measures in other states and, in general, undermine federal preemption standards. This threat is especially alarming in light of the fact that only one away-from site facility in the United States (Morris, Illinois) is currently accepting spent nuclear fuel for storage. State legislation has already sought (thus far unsuccessfully) to foreclose the availability of that site to spent fuel generated in other states.

The judgment of the United States Court of Appeals for the Ninth Circuit should be reversed upon a finding that the Atomic Energy Act of 1954, 42 U. S. C., § 2011, *et seq.*, preempts Sections 25524.1(b) and 25524.2 of the Warren-Alquist Act.

SUMMARY OF ARGUMENT

Sections 25524.1(b) and 25524.2 of California's Warren-Alquist Act are impliedly preempted by the Atomic Energy Act of 1954 because they militate against congressional policy encouraging the development of nuclear power for the public good by placing a moratorium on the certification of new nuclear power plants. As such, these two sections constitute obstacles to the accomplishment and execution of the purposes and objectives of Congress—the key factor in a court's determination that by implication state law is preempted by federal regulation.

Furthermore, these sections place obstacles in the way of the efficient generation and sale of power interstate. That is, sections 25524.1(b) and 25524.2 militate against Congress' express policy to encourage the development of nuclear power for the general welfare under the protection of uniform safety standards. If even a few states imposed such a ban on new nuclear power plants under the pretense of a concern for the disposal of spent fuel, the results could be devastating to both the efficient transmission of power and federal regulation of nuclear safety.

ARGUMENT

1. The Statutory Scheme of the Atomic Energy Act of 1954 Impliedly Preempts Sections 25524.1(b) and 25524.2 of the Warren-Alquist Act.

When federal and state laws regulate the same subject matter, the first inquiry a court must make to determine the continuing validity of the state statute is whether the state law conflicts with the federal legislation to such an extent that it "stands as an obstacle to the accomplishment and execution of the full purposes and objectives of Congress." *Florida Lime and Avocado Growers, Inc.* v. *Paul,* 373 U. S. 132, 141 (1963) citing *Hines* v. *Davidowitz,* 312 U. S. 52, 67 (1941); *Northern States Power Co.* v. *Minnesota,* 447 F. 2d 1143, 1147 (8th Cir. 1971), *aff'd,* 405 U. S. 1035 (1972). Congressional intent to preempt under these circumstances may be gleaned from the structure and purpose of the federal scheme of regulations. *City of Burbank* v. *Lockheed Terminal,* 411 U. S. 624, 633 (1973); *Rice* v. *Sante Fe Elevator,* 331 U. S. 218, 236 (1947).

The Atomic Energy Act was adopted in 1954 to provide for "the development and utilization of atomic energy for peaceful purposes to the maximum extent consistent with the common defense and security and with the health and safety of the public." 42 U. S. C. 2013(d). The Act contemplates cooperative efforts between federal and state authorities in the development of atomic energy and provides a mechanism for allocating responsibility between the two, but does so in the context of reserving to the Nuclear Regulatory Commission ("*Commission*") the pre-eminent and exclusive authority to regulate:

> (1) the construction and operation of any production or utilization facility;
>
> * * *

> (4) the disposal of such ... nuclear material as the commission determines ... should, because of the hazards or potential hazards thereof, not be so disposed of without a license from the commission. 42 U. S. C. § 2021(c).

State legislation which purports to limit or otherwise qualify the authority which may be granted to licensees by the Commission pursuant to that explicit authorization by Congress is in direct conflict with the Atomic Energy Act and cannot be sustained. *Gibbons* v. *Ogden,* 22 U. S. (9 Wheat.) 1 (1824).

Even where the Atomic Energy Act expressly recognizes the authority of a state to regulate "with respect to the generation, sale or transmission of electric power produced through the use of nuclear facilities licensed by the Commission," it further mandates that the exercise of this authority not interfere with any activities of the Commission. 42 U. S. C. § 2018. Thus, while Congress clearly envisioned joint federal-state participation in the development and regulation of atomic energy, it unequivocally reserved pre-eminent and exclusive authority to the Commission to establish national standards for the "construction and operation" of nuclear power plants and the "disposal" of nuclear material. 42 U. S. C. § 2013(c).

Sections 25524.1(b) and 25524.2 of the Warren-Alquist Act undermine the purposes and objectives of the federal statute here at issue by burdening the efficient transfer and sale of electricity among the states. Section 25524.1(b) provides that no nuclear plant can be constructed until the state energy commission has determined, on a case by case basis, the adequacy of the plant's spent fuel storage capacity. Section 25524.2 prohibits the building of any nuclear plant until the Commission has approved and there exists a demonstrated technology or means for the disposal of high-level nuclear waste." "Disposal" is defined by the statute to mean "a method for the permanent and terminal disposition of high-level nuclear waste." § 25524.2(c).

The practical effect of these sections is to foreclose the Commission's clear congressional authority to defer its approval of any particular means of permanent disposal pending further study and to ban the construction of additional reactors under the guise of state concern for the cost or feasibility of permanent nuclear waste disposal.

Every peer-reviewed, professional, national and international study yet undertaken has demonstrated that nuclear wastes can be safely disposed in permanent repositories. (*See, e.g.,* Report to the American Physical Society by the Study Group on Nuclear Fuel Cycles and Waste Management, *Reviews of Modern Physics,* January, 1978; Final Report of the Committee on Nuclear and Alternative Energy Systems, National Research Council, 1980, "Energy Transition: 1985-2010"). In addition, there currently exist foreign programs, based on demonstrated technology, for the permanent disposal of high level radioactive wastes. In 1979, the Swedish Parliament approved the Swedish KSB-Spent Fuel Disposal Program. While the Act does give state and local agencies some latitude in regulating this area, Congress never intended to allow the states to exclude reactor-generated electricity. These two sections of the Warren-Alquist Act simply do not comport with Congress' declaration of policy with respect to the Atomic Energy Act: "It is therefore declared to be the policy of the United States that (a) the development, use and control of atomic energy shall be directed so as to make the maximum contribution to the general welfare." 42 U. S. C. § 2011. Sections 25524.1(b) and 25524.2 inhibit the development of nuclear energy. Together these sections stand as obstacles to national policy and, therefore, are impliedly preempted by the Atomic Energy Act.

Support for this proposition can be found in several cases which held that the Act preempted both state and local regulations of activities involving radiation hazards. For example, in *Northern States Power Co.* v. *Minnesota, supra,* the power company applied to the state pollution control agency

for a waste disposal permit for one of its nuclear power plants that was licensed by the Commission and operating in full compliance with federal radiation safety requirements. The state permit was issued, but with certain conditions relating to the discharge of wastes and monitoring procedures, which were substantially more stringent than those required by the Commission under federal law. The court found that, in light of the pervasiveness of the statutory scheme and the nature of the subject matter regulated by the Atomic Energy Act, the federal government had the exclusive authority by implication to regulate the construction and operation of nuclear power plants insofar as such activities involved radiation hazards.

> [R]egulation of the radioactive effluents discharged from a nuclear power plant is inextricably interwined with the planning, construction and entire operation of the facility.
>
> * * *
>
> Were the states allowed to impose stricter standards on the level of radioactive waste releases discharged from nuclear power plants, they might conceivably be so overprotective in the area of health and safety as to unnecessarily stultify the industrial development and use of atomic energy for the production of electric power. 447 F. 2d at 1153-4.

More recently, a federal district court in New York held that a city ordinance which attempted to block the operation of a nuclear reactor already licensed by the NRC, was invalid as it was preempted by the Atomic Energy Act of 1954. *United States* v. *City of New York*, 463 F. Supp. 604 (S. D. N. Y. 1978). In so holding, the court took note of the stringent investigation and findings the NRC must make under law before it will issue a license for a nuclear reactor. The court stated that the pervasiveness of the statutory scheme did not leave room for any dual federal-state regulation of radiation hazards in the operation of nuclear reactors. Similarly, in *Consolidated Rail Corp.* v. *ICC*, 646 F. 2d 642 (D. C. Cir. 1981) the court upheld a decision of the ICC that use of special train service for transporting hazardous radioactive material

and the heavy additional expenditures associated with it, were unnecessary because they were not mandated by either the Department of Transportation nor the NRC which were the agencies given specific statutory authority to establish safety standards covering the transportation by rail of radioactive materials.

Although California argues that the motivation for enacting these statutes was primarily economic, the Warren-Alquist Act simply fails to authorize the Energy Commission even to consider cost in its assessment of the adequacy of waste disposal capacity and methods for new plants in California. *Pacific Legal Foundation* v. *State Energy Resources Conservation and Development Commission,* 659 F. 2d 903, 908 n. 4, 909 n. 9 (9th Cir. 1981). The real concern—radiological safety—is particularly evident in section 25524.2, which requires approval of particular demonstrated technology for the disposal of high-level nuclear waste before any new nuclear plants are built. This is a transparent attempt by a state to impose new stringent standards on the construction and operation of nuclear plants and to foreclose the authority of the Commission to defer final approval for any particular method of permanent disposal for spent nuclear fuel. It is clear beyond cavil that such an attempt by a state legislature is an invalid effort to regulate an area already preempted by federal law. *Gibbons* v. *Ogden, supra.*

2. Since Sections 25524.1(b) and 25524.2 of the Warren-Alquist Act Impede the Sale and Transfer of Electricity in Interstate Commerce, They Are Preempted by the Atomic Energy Act of 1954.

Sections 25524.1(b) and 25524.2 of the Warren-Alquist Act impede the efficient sale and transfer of electricity among the states by imposing a moratorium on the construction of nuclear power plants in California. As such, they conflict with Congress' intent to provide for national uniform regulation of nuclear power in order to secure protection of the general

welfare. Section 2012 of the Atomic Energy Act entitled "Congressional Findings" states in relevant part:

* * *

> (c) The processing and utilization of source, byproduct, and special nuclear material affect interstate and foreign commerce and must be regulated in the national interest.
>
> * * *
>
> (f) The necessity for protection against possible interstate damage occurring from the operation of facilities for the production or utilization of source or special nuclear material places the operation of those facilities in interstate commerce for the purposes of this chapter.

In the case of *Northern States Power Co.* v. *Minnesota, supra,* the court referred to Section 2012 as support for its finding that the Minnesota law was preempted by the Atomic Energy Act. The Eighth Circuit noted that this section evidenced Congress' intent to preempt the field both because of its subject matter and the need for uniform controls. The court stated:

> [M]ajor generating plants not only produce electric power for customers in their own and neighboring states, but are part of an interstate transmission system which makes possible the purchase and sale of electric power between major systems across the nation. 447 F. 2d at 1153.

The interstate electrical transmission system will allow California to purchase reactor-generated electricity produced in neighboring states without incurring responsibility for developing nuclear power plants within its own borders. It will allow California utilities to own nuclear generating plants in other jurisdictions or interests therein. Courts have not favored such attempts to protect parochial interests. In a recent case the Seventh Circuit invalidated an Illinois statute which sought to limit accessibility to Illinois nuclear waste disposal facilities and rejected the insularity fostered by such legislation. *Illinois* v. *General Electric Co.,* Nos. 81-2768 and 81-2778 (7th Cir. July 13, 1982). (Slip Op. at p. 13).

One of the goals of the Atomic Energy Act was to promote uniform standards in the generation of nuclear power to ensure protection of the general welfare. By placing a moratorium on the certification of new power plants, the California legislature has disrupted the pre-eminent and exclusive licensing authority conferred by Congress upon the Commission. In sum, sections 25524.1(b) and 25524.2 of California's Warren-Alquist Act fly in the face of Congress' express policy to encourage the development of nuclear energy under licenses to be granted by the Commission for the "construction and operation" of nuclear plants and the "disposal" of nuclear materials.

CONCLUSION

For the foregoing reasons, the judgment of the United States Court of Appeals for the Ninth Circuit should be reversed.

Respectfully submitted,

JOHN M. CANNON
SUSAN W. WANAT
Attorneys for *Amici Curiae**

Of Counsel:
ANN P. SHELDON
Mid-America Legal Foundation
Suite 842
20 North Wacker Drive
Chicago, Illinois 60606

* We gratefully acknowledge the assistance of William H. Link, Jr., Esq.

Amicus Brief

4

Nos. 81-1945

In the Supreme Court of the United States

OCTOBER TERM, 1982

PACIFIC GAS AND ELECTRIC COMPANY AND
SOUTHERN CALIFORNIA EDISON COMPANY,

Petitioners,

v.

STATE ENERGY RESOURCES CONSERVATION AND
DEVELOPMENT COMMISSION, *et al*

ON PETITION FOR A WRIT OF CERTIORARI TO THE UNITED STATES COURT OF APPEALS FOR THE NINTH CIRCUIT

BRIEF FOR THE STATE OF CONNECTICUT AS AMICUS CURIAE

CARL R. AJELLO
Attorney General

ROBERT S. GOLDEN, JR.
Assistant Attorney General

NEIL T. PROTO
New Haven, Connecticut
06512
Special Assistant
Attorney General

Office of the Attorney General
One Central Park Plaza
New Britain, Connecticut
06051
(203) 827-1553

TABLE OF CONTENTS

Page

TABLES OF AUTHORITIES CITED ii

STATEMENT AND INTEREST OF THE STATE OF CONNECTICUT 1

DISCUSSION

A. The States Are Not Prohibited From Conditional Prohibition Of Nuclear Power Plant Construction For Economic Reasons Because Congress Neither Expressly Nor Impliedly Preempted The States From Such Legislation 10

B. Historic Relationship Between States And Federal Government In The Evolution Of Nuclear Generation Of Electricity Demonstrates A Shared Responsibility For Development 11

CONCLUSION 20

TABLE OF CASES, STATUTES AND OTHER AUTHORITIES

Page

Cases:

Florida Lime & Avocado Growers, Inc. v. Paul, 373 U.S. 132 (1963) 11

Hines v. Davidowitz, 312 U.S. 52 (1941) 11

Huron Portland Cement Co. v. Detroit, 362 U.S. 440 1960 10

Jones v. Rath Packing Co., 430 U.S. 519 (1977) 10

Municipal Electric Association of Massachusetts v. Securities Exchange Commission, 413 F.2d 1052 (D.C. Cir. 1969) 5

New England Coalition of Nuclear Pollution v. Nuclear Regulatory Commission, 582 F.2d 87 (1st Cir. 1978) 7, 18

Nuclear Regulatory Commission v. Sholly, et al, 451 U.S. 1016 7

Pennsylvania R. Co. v. Public Service Comm'n., 250 U.S. 566 (1919) 11

Ray v. Atlantic Richfield Co., 435 U.S. 151 (1978) ... 10, 11

Rice v. Santa Fe Elevator Corp., 331 U.S. 218 (1947) ... 10

Western and Southern Life Ins. Co. v. State Board of Equalization, 451 U.S. 648 (1981) 3

Constitution:

U.S. Constitution Amendment X 10

Statutes:

Atomic Energy Act of 1954:
42 U.S.C. §2011 ..... 1, 3

Page

42 U.S.C. §2013(d) 3
42 U.S.C. §2018 12
42 U.S.C. §2021(k) 13

Johnson Act:
28 U.S.C. §1342 3

McCarren-Ferguson Insurance Act:
15 U.S.C. §1011 8

Price-Anderson Act:
42 U.S.C. §2110 ..... 8, 11, 16

California Public Resource Code (West):
§25524.1(b) 1
§25524.2 1

Connecticut General Statutes:
Connecticut General Statutes of 1853 2
Chapter 54 Special Acts of 1963 No. 1 5
§16-11 Connecticut General Statutes 2, 3, 7
§16-43 Connecticut General Statutes 2
§16-44 Connecticut General Statutes 2
§16-45 Connecticut General Statutes 2
§16-46 Connecticut General Statutes 2
§16-47 Connecticut General Statutes 2
§19-404 Connecticut General Statutes 4
§22a-136 Connecticut General Statutes, (formerly Public Act 79-487) 1, 8
Title 38 Connecticut General Statutes 6

Other Authorities:

Federal Agencies
Connecticut Yankee Atomic Power Company, Federal Energy Regulatory Commission, Docket No. ER 80-717-000, Opinion No. 148, September 28, 1982 ... 14

Page

Federal Tort Claim of General Public Utilities et al, Nuclear Regulatory Commission, Memorandum and Order, CLT 81-10, June 8, 1981 ..... 8, 18

Public Service Company of New Hampshire et al, Nuclear Regulatory Commission, CLI 78-1, 7 NRC 1 (1978) 7, 18

State Agencies

Connecticut Light and Power Company Rate Application, Connecticut Department of Public Utility Control, Docket No. 820701 16

Northeast Nuclear Energy Corp. Petition No. 60, Connecticut Power Facilities Evaluation Council, (June 19, 1980) 9

Federal Register

45 Federal Register 55402 August 19, 1980, Energy Planning: Final Regulation 13

47 Federal Register No. 59 March 26, 1982, Amendments to 10 CFR part 51 19

47 Federal Register No. 62 March 31, 1982, Amendments to CFR parts 2 and 50 ..... 8, 19

Connecticut General Assembly

House Proceedings of May 3, 1979, page 139 9

Senate Proceedings of May 29, 1979, pages 95, 118, and 124 9

United States Congressional Record

100 Congressional Record 12015 (1954) Congressional Record daily edition July 15, 1982 4

The Historical Roots of the Legal Systems Response to Nuclear Power, Maleson; 55 Southern Cal. Law Review 597 (March 1982) 3

Nuclear Safety: The Unresolved Institutional Problem, Proto, Hartford Courant March 28, 1982 3

The State of Connecticut will not discuss whether the challenge by Pacific Gas and Electric Company and Southern California Edison to the provisions in the 1976 amendments to California's Warren-Alquist Act, Cal. Pub. Res. Code Sections 25524.1(b) and 25524.2(West 1977) are ripe for judicial review. It will confine its discussion to whether the Atomic Energy Act of 1954, 42 U.S.C. Section 2011, et seq. pre-empts that portion of the California code that conditions the construction of nuclear generated power plants on a finding by the appropriate state agency that the United States government has approved a demonstrable technology or means for the disposal of high level nuclear waste.

STATEMENT
and
INTEREST OF THE STATE OF CONNECTICUT

The interest of the State of Connecticut is set forth in substantial detail because it provides the reasoning, largely economic in nature, for the Connecticut Legislature's enactment of Section 22a-136 of the Connecticut General Statutes; a statute that, in material respects, is similar to the California Act that is being challenged in this controversy. Moreover, this description of our interest begins to provide a portion of the historical setting that, if properly understood, demonstrates that the United States, in its argument, has misperceived the legal and economic nature of the federal government's support for commercial nuclear power generation.

The State of Connecticut has a substantial, pervasive and historically unique interest in the commercial generation of electricity from nuclear fission.

1. In 1853 the Connecticut General Assembly began the process of regulating private industry to serve a public in-

terest. It created the General Rail Road Commission, (Connecticut Gen. Statutes of 1853, Chapter 54) which was among the earliest public utility regulatory commission in the United States. The General Assembly recognized the importance of the railroad to the economic well being of the State's industry, towns and people.

In 1911, the Connecticut legislature determined that other privately owned utliities were tempered with a public responsibility and should be regulated for certain purposes by variously structured state commissions. This determination applied to the Hartford Electric Light Company and the Connecticut Light and Power Company, two companies engaged in the construction and operation of electric generating facilities from hydro and fossil fuel sources. Their corporate charters were granted by the state in 1881 and 1905, respectively. They were granted a monopoly interest within their service areas, as well as the power to condemn property.

2. As early as 1913, and the Connecticut legislature–like its counterparts in other states and on the federal level–enacted statutes to deal with the securities abuses and complex corporate arrangements of the public utility industry. These laws were applied to the State's investor owned utilities, including the Hartford Electric Light Company and the Connecticut Light and Power Company, through the Connecticut Public Utilities Commission. See Section 16-43, Connecticut General Statutes (1915) Merger and Sale of Public Service Companies –Issuance Securities; Section 16-44, Connecticut General Statutes (1913) Formation and Discontinuation of Public Service Companies; Section 16-46 (1917) Dissolution of Public Service Companies; and Section 16-45 (1935) Holding Companies.

Simultaneous with the creation of Connecticut's early utility regulatory mechanism Congress enacted legislation,

now referred to as the Johnson Act, 28 U.S.C. 1352, that recognized the State's economic role in the regulation of electric utilities. The Act restrains federal courts from enjoining, suspending or restraining "the operation of, or compliance with any order affecting rates chargeable by a public utility and made by a State political subdivision. . . ."

3. In 1954, Congress enacted the Atomic Energy Act, 42 U.S.C. 2011, *et seq.*, to "encourage widespread participation in the development and utilization of atomic energy for peaceful purposes . . .", 42 U.S.C. 2013(d). It also determined that the construction and operation of nuclear power plants would be the responsibility of investor owned utilities, whose corporate charters, intra-state rates, insurance premiums, geographic location and adherence to "the public interest," see, e.q. Section 16-11 Connecticut General Statutes (1911), were the traditional responsibility of state governments.[1]

Congress recognized the regulatory import of its selection of the investor-owned utility as the vehicle for developing nuclear power. It stated that nothing in the Atomic Energy Act,

> "shall be construed to affect the authority or regulations of any Federal, State, or local agency with respect to the generation, sale, or transmission of electric power

---

[1]See Maleson, "The Historical Roots of the Legal System's Response to Nuclear Power," 55 Southern California Law Review 597 (March 1982); McCarran & Ferguson Insurance Act, 15 USC 1011 *et seq*, and *Western and Southern Life Insurance Co. v. State Board of Equalization*, 451, U.S. 648 (1981); and Proto, "Nuclear Safety: The Unresolved Institutional Problem," Hartford Courant (March 28, 1982), reprinted in the Congressional Record, S 2443 (daily ed., July 15, 1982).

produced through the use of nuclear facilities licensed by the Commission."[2]

Ar[illegible], in explaining the meaning of this provision, Senator Hickenlooper the floor manager of the Senate bill, emphasized that Congress was *not* creating a new institution to construct and operate nuclear plants. Instead it was leaving such institutional responsibility to the same investor owned utilities already responsible for generating electricity from Hydro, coal, oil and gas and subject to state law. "We take the position that electricity is electricity," Senator Hickenlooper stated." He continued:

> "We feel there is no difference (between nuclear and other energy sources) and that it should be treated as all other electricity which is regulated by the public. . . .
>
> (Section 271) is designed to keep the regulatory authority exactly *as it is now, traditionally and under the law,*" (emphasis added) 100 Cong. Rec. 12015 (1954).

In 1955, Connecticut responded to Congress' acknowledgement of State regulatory continuity *vis-a-vis* investor owned utilities that construct nuclear power plants by recognizing that "new conditions" may result from nuclear technology with respect to certain traditional state function, including, "transportation, public utilities, . . . accident, (and) fire and casualty insurance.[3] In order to coalesce these functions with the new technology, the legislature declared" the policy of the state to be . . . to adapt its laws and regulations to meet the new conditions in ways that will . . . (protect) the public interest. "[4]

---

[2]42 U.S.C. 2018 (1976).

[3]Section 19-404, Connecticut General Statutes (1955).

[4]Id.

4. In 1962, eleven New England utilities (including the Connecticut Light and Power Company and Hartford Electric Light Company), formed the Connecticut Yankee Atomic Power Company in order to construct the Connecticut Yankee Atomic Power Station. The participation of the two Connecticut corporations in this complex corporate arrangement was approved by the Connecticut General Assembly when it enacted Special Act No. 1 of 1963 (January 22, 1963).

Similar joint enterprises were undertaken by Connecticut's investor-owned utilities in order to participate in the construction of nuclear power plants in Connecticut (Millstone I, II and the proposed III) and outside of it (Vermont Yankee and Maine Yankee). Connecticut's Public Utilities Commission approved the various corporate actions that were required to effectuate these arrangements; some of which had significant economic consequences for consumers and other utilities, see e.g. *Municipal Electric Association of Massachusetts v. Securities and Exchange Commission*, 413 F.2d 1052 (D.C. Cir., 1969).

Today, Northeast Utilities which is a holding company that consists primarily of the recently merged subsidiaries of Connecticut Light and Power and Hartford Electric Light Company operates three nuclear power plants in Connecticut with a capacity of more than 2,000 megawatts of electricity. The power from these plants provides 53 percent of the state's electricity.

Northeast is also responsbile for the operation of other oil, coal and hydro generated facilities, most of which are subject to regulation by the Connecticut Department of Public Utilities Control.

5. Connecticut is the corporate home of insurance companies, many of whom are participating members in Ameri-

can Nuclear Insurers, (ANI), an association that provides on site property and off-site liability insurance for commercial nuclear power plants. ANI is located in Farmington, Connecticut; the reasonableness of the rates it charges Northeast Utilities are subject to the exclusive jurisdiction of the Connecticut Insurance Commission. See Title 38 of Connecticut General Statutes.

Moreover, on and off-site insurance premiums paid by Northeast (as well as premiums paid under recently developed insurance programs) are considered operating costs and directly effect the ratepayer.

6. In 1971, Northeast Utilities and other New England utilities began construction of Millstone III, Connecticut's fourth nuclear power plant. Northeast projected the cost to be $400 million in 1978. In September 1982, with the plant 50 percent complete, Northeast increased its projected cost to $3.5 billion.

Thus far Northeast's stockholders have assumed the burden of construction costs greatly depressing the stocks value. Connecticut does not permit Construction Work in Progress costs or Allowance for Funds Used During Construction costs to be passed on to consumers, "nonetheless," consumers will eventually be requested to pay the construction cost of this nuclear component of Northeast's generating system.[5] In the interim, the Connecticut Department of Public Utilities Control must consider Northeast's request for rate increases to cover other costs in light of, inter alia, the need to preserve

---

[5]When Millstone III comes on line the rate base, upon which a return must be granted, will increase so greatly that it may cause a 25 percent increase in rates.

stockholder investment and to assure that Northeast has the ability to "accomplish the duties imposed upon such companies."[6]

7. On March 28, 1979 an accident occured at Unit 2 of the Three Mile Island (TMI) nuclear power plant in Pennsylvania. The TMI plant was operated by General Public Utilities, a holding company that owns the stock of its three subsidiaries and is subject to the laws of Pennsylvania and New Jersey. Some of the legal issues arising from that controversy have already reached this Court.[7] More importantly, however, significant interpretations of the Atomic Energy Act have been rendered by the Nuclear Regulatory Commission, (NRC), its operating staff and other federal agencies since the accident that add considerable clarity to the precise and limited role of the federal Government and the substantial role of state government vis-a-vis economic regulation.

On January 30, 1980, the Director of the Office of Nuclear Regulation, NRC in a Report to the Commissioners, SECY-80-60, affirmed the continued vialibility of the NRC decision in *Public Service Company of New Hampshire et al* (Seabrook Station, Units 1 and 2), NRC 1 (1978); affirmed in *New England Coalition on Nuclear Pollution v. NRC*, 562 F2d 87 (lost Cir. 1978), that contended State public utility commissions–not NRC–were responsible for determining the financial needs of utilities for operating, emergency and decommissioning costs.

On March 31, 1982, the NRC formally determined that in seeking a license, a utility need not demonstrate to the NRC

---

[6]Sec. 16-11, Connecticut General Statutes.

[7]*Nuclear Regulatory Commission v. Sholly*, et al 451, U.S. 1016.

that it is financially qualified to construct, operate or decommission a nuclear power plant. (Amendment to 10 CFR parts 2 and 50, 47 Fed. Reg. No. 62: 3/81/82).

On June 8, 1981, the NRC determined that its responsibility for the actual design of nuclear power plants, and the procedures followed by utilities to assure the health and safety of the public, is quite limited. Moreover, because the NRC "does not thereby certify to the industry that the industry's designs and procedures are adequate to protect its equipment or operations," it is not responsible for any of the financial consequences that flow from construction or operation. Consequently it denied GPU's claim (for 4 billion dollars), that "NRC failed to review with due care certain equipment analyses, procedures, and training before licensing TMI-2 on February 8, 1978, and failed to warn them of defects affecting TMI-2 of which was, or should have been, aware." See *In the Matter of Federal Tort Claim of General Public Utilities Corp. et al.*, Memorandum and Order (CLT-81-10, June 8, 1981).

In this manner, the NRC has—through formal decision—demonstrated that it has no statutory responsibility for protecting the public or the utility from the financial costs of nuclear power plant operations or on-site damage from accidents. Moreover, the TMI accident demonstrated that the Price-Anderson Act liability limit contributed only marginally to the *resolution of the more* substantial insurance problems of GPU (i.e., replacement power costs, on-site damage), *none* of which are regulated by the Atomic Energy Act.

8. In October 1979 the Connecticut Legislature—expressing considerable concern about the economic problems described above—enacted Public Law 79-487 (Now Section 22a-136 Connecticut General Statutes), which provides, inter alia, that:

> "No construction shall commence on a fifth nuclear power facility until the commissioner of environmental protection finds that the United States Government, through its authorized agency, has identified and approved a demonstrable technology or means for the disposal of high level nuclear waste."

Generation mix was the prime motivation of the bill's sponsor in the Connecticut House of Representatives where Representative Levine warned that by 1986 nearly all of Connecticut's base load would be produced by nuclear power (Transcript of Connecticut General Assembly House Proceedings May 3, 1979, page 139). In Connecticut's Senate sponsors also relied on the need for a divergent energy mix as the reason for passing the legislation. Comments of Senators Lieberman, Knous and Johnson; Transcript of Connecticut General Assembly Senate proceedings May 29, pgs. 95, 118 and 124.

9. There is no currently licensed means for permanent safe disposal of spent fuel generated by investor owned nuclear power plants. See Brief of the United States, Jurisdiction Statement (p. 3), nor has Congress or the NRC determined what kind of an institutional arrangement (public or private, existing or new) would be responsible for handling such permanent disposal and how the utility industry would finance the transportation and disposal of its spent fuel.

As a result of this uncertainty Connecticut's nuclear power plant sites have to expand their existing capacity to accommodate on site storage of nuclear waste in case that the off site disposal is interrupted. "Under such conditions this storage will be essential for continued operation of the station." *Petition Number 60*, June 19, 1980 filed by Northeast Nuclear Energy Company before the Power Facilities Evaluation Council.

A

THE STATES ARE NOT PROHIBITED FROM CONDITIONAL PROHIBITION OF NUCLEAR POWER PLANT CONSTRUCTION FOR ECONOMIC REASONS BECAUSE CONGRESS NEITHER EXPRESSLY NOR IMPLIEDLY PREEMPTED THE STATES FROM SUCH LEGISLATION.

Your Amicus believes that the Petitioners are misconstruing the Atomic Energy Act of 1954 and are inviting this Court to invade an area of overwhelming state concern. The preemption of a state's fundamental exercise of police power to regulate its public utilities is not easily accomplished. States are reserved the exercise of their police power under the provisions of the tenth Amendment to the Constitution of the United States which provides: "The powers not delegated to the United States, are reserved to the States respectively, or to the people." Where Congress has not expressly preempted states from a field of regulation, as in the instant matter, then the Court may test for implied preemption. In challenges to state laws that involve a state's traditional exercise of police power, the initial presumption is that the federal act will not supersede the state law unless it is the clear and manifest purpose of Congress. *Ray v. Atlantic Richfield Co.*, 435 U.S. 151, 156 (1978); *Jones v. Rath Packing Co.*, 430 U.S. 519, 525 (1977); *Rice v. Sante Fe Elevator Corp.*, 331 U.S. 218, 230, (1947).

In applying the preemption tests this Court has been reluctant to find conflicts between state and federal regulatory schemes. *Huron Portland Cement Co. v. Detroit*, 362 U.S. 440 (1960).

Implied preemption can be found where a state law stands as an obstacle to the accomplishment and execution of the

full purposes and objects of Congress. *Hines v. Davidowitz*, 312 U.S. 52, (1941). It should be clear from the following discussion that such is not the case in the instant matter. As long as the state action does not make compliance with federal law impossible, the state law will not be preempted. (*Florida Lime & Avocado Growers, Inc. v. Paul*, 373 U.S. 132, 142-143 (1963) cited in *Ray v. Atlantic Richfield, supra*). Again, no such conflict exists in the present pluralistic approach to nuclear development.

In some cases it has been found that the federal scheme of regulation is so pervasive or the federal interest is so dominant as to preclude state laws on the same subject, *Pennsylvania R. Co. v. Public Service Comm'n.* 250 U.S. 566, 569 (1919) (cited in *Ray v. Atlantic Richfield Co., supra*). However, as the following discussion will demonstrate, the state interest is the most dominant one while the federal interest is only technologically oriented.

B

HISTORIC RELATIONSHIP BETWEEN STATES AND FEDERAL GOVERNMENT IN THE EVOLUTION OF NUCLEAR GENERATION OF ELECTRICITY DEMONSTRATES A SHARED RESPONSIBILITY FOR DEVELOPMENT.

The United States has misperceived the historic context of the evolution of nuclear power generated electricity vis-a-vis the role of the private sector and state government; and it has failed to acknowledge the importance of the accident at Three Mile Island on the question involved in this controversy. The consequence, as a practical matter, is that it attributes to the Nuclear Regulatory Commission a role well beyond that contemplated by Congress or, previously sought by the Commission.

We think there are three important factors that should provide the historic framework for this court's analysis of whether the Atomic Energy Act of 1954, as amended, preempts the California statute that conditions the construction of nuclear power plants on the development, by the United States, of a means for the permanent disposal of nuclear waste.

1. State government, through its Public Utilities Commission and other state agencies, has "traditionally and under the law," exercised pervasive regulatory responsibility of an economic nature over investor-owned utilities. Moreover, the state has a continuous sovereign responsibility to assure that such utilities—which have a monopoly and, often times, the power of eminent domain—act "in the public interest" vis-a-vis consumers of electricity within the state.

The responsibility for developing nuclear power has always been bifurcated between the Federal Government and the States. Generally, technical and operational responsibilities for health and safety have been reserved for federal regulation while the financial responsibilities have been left to the States. Congress acknowledged this traditional state role. It stated that the authority of the states over the generation, sale or transmission of electric power produced through licensed nuclear facilities shall not be affected. 42 U.S.C. 2018.[8] Later, if any equivocation of the state's role of mutual

---

[8]"§2018. Agency jurisdiction. Nothing in this chapter shall be construed to affect the authority or regulations of any Federal, State, or local agency with respect to the generation, sale, or transmission of electric power produced through the use of nuclear facilities licensed by the Commission: *Provided*, That this section shall not be deemed to confer upon any Federal, State, or local agency any authority to regulate, control, or restrict any activities of the Commission."

regulation remained, it was put to rest in Section 2021(k) which reads:

> "Nothing in this section shall be construed to affect the authority of any state or local agency to regulate activities for purposes other than protection against radiation hazards." (42 U.S.C. 2021(k).[9]

Historically it has been the state regulator who has to grapple with such issues as reorganizations and mergers of local utilities into croporate entities capable of meeting the financial challenges of building nuclear-powered generating stations as well as the more *usual* financial supervision typical of state regulation. Obviously, each state regulator had to decide if the financial burden of nuclear power was in the state's public interest, Connecticut chose early to proceed with the development of nuclear power when it approved the merger of two of its largest electric companies to form Northeast Utilities which has become a leader in nuclear generation in the United States.

As a consequence of the merger approval the Connecticut Public Utilities Commission later had to regulate the corporate restructing and financing of three completed nuclear

---

[9]This is not to suggest the State has no role in protection against radiological hazards. On the contrary, state and local government have an essential role in radiological emergency planning and assuring public safety in the event of a nuclear power plant accident. Of particular importance to this controversy, a portion of the costs associated with emergency preparedness if financed by utility ratepayers and state taxpayers. See, e.g. Emergency Planning; Final Regulations, 45 Fed. Reg. 55402 (August 19, 1980) and Report to Congress on Status of Emergency Response: Nuclear Regulatory Commission (NUREG-0755), March 1981.

plants and one still under construction. More significantly, Connecticut ratepayers have provided the revenues necessary to support the financing of all these nuclear power projects. Interestingly, since the accident of Three Mile Island, the overreliance on nuclear energy is considered a negative risk factor and therefore results in a need for ratepayers to support a premium to the company's return on equity–if the company's testimony in recent rate proceedings are to be believed.

The economic risks of nuclear power, which ultimately rests with the state ratepayer, are indeed quite real. While technologically America has been able to generate nuclear power for several decades the financial burden has become the main stumbling block.

Perhaps nothing demonstrates this fact more than the Federal Energy Regulatory Commission's (FERC) assessment of negative risk factors in its September 28, 1982 interstate wholesale rate case decision in re *Connecticut Yankee Atomic Power Company*, Docket No. ER 80-717-000, Opinion No. 148 in which it noted that Connecticut Yankee could not sell its debentures "because of the perceived risks of investing in a single asset nuclear generating company." FERC concluded that the high risks associated with nuclear generation[10] warrants a rate of return on equity substantially higher than the return associated with the owner utilities who have a mix of generating capacity.

There is, as we indicated in our Statement and the court

---

[10]Among the risks identified with Nuclear generation where negative salvage associated with decommissioning and that the continued operation of Connecticut Yankee is subject to the continual approval of the NRC.

of appeals found in reference to California, significant economic and financial justification for state legislative and regulatory actions to deal with nuclear power generation problems, including the demonstrable economic consequences that now result from the absence of a means for the permanent disposal of nuclear waste. Moreover, it is disengenuous for the United States to suggest (Jurisdiction Statement Brief at 10), that state legislatures that have "simply publish(ed) a legislative committee report articulating some state pretensious interest or policy" other than the real basis for its concern. While at the same time the United States acknowledges "there is no currently licensed means for permanent safe disposal" (id., at 8) yet urges this court to vacate the court of appeals decision because Congress may declare–with no basis in reality–such a means actually exists.

2. In the Atomic Energy Act of 1954, Congress *did not mandate* that nuclear power plants be constructed; nor did it create or finance through taxation revenue a public institution with responsibility for generating electricity only from nuclear fission.

Instead Congress selected the investor-owned utility; a private corporation already engaged in the generation of electricity from coal, oil or hyro and subject to the economic regulation of the states, as the entity responsbile for construction and operating nuclear power plants. Congress did, indeed, through its broad health and safety regulatory framework and through research and insurance liability schemes (i.e. Price-Anderson), provide economic *incentives* for the private sector to consider in deciding whether to undertake power plant construction, but Congress has not sought to eliminate the financial risk to the private sector or preclude it–or State Public Utility Commissions–from deciding that its capital is more prudently invested in other sources of

energy.[11] But it is the local ratepayer not the taxpayer who primarily support the construction and operation of nuclear power. Conceptually, this distinction is significant in that it demonstrates the limited nature of the federal responsibility under the Atomic Energy Act.

In practice the state's share of responsibility for embracing nuclear development translates into the development of expensive electricity which may never be cost effective. For example the Millstone III Nuclear Power Station power, according to company exhibits, will cost 25 percent more per kilowatt hour than power produced by replacement oil for the first 10 years of its operation.[12]

If the federal scheme were truly dominant and it were the clear manifest purpose of Congress to foster the development of nuclear power than it would be the taxpayers', through expenditures by the federal government, responsibility to see that nuclear plants are built.

Should the plant fail to operate and the utility become saddled with a multi-billion dollar highly encumbered invest-

---

[11]The Price-Anderson Act provides liability limits for off-site damage *only*. The federal contribution under the Act is minimal; it is activated *only* after private insurance (300 million dollars and other non-affected utilities (5 million assessment) contribute toward the 560 million dollars limit. Moreover, once additional plants are constructed, the addition of their assessment will result in *no* federal contribuiton.

[12]According to exhibits filed in Connecticut Department of Public Utility Control Docket 820701, date request CLF-3, Millstone III Nuclear Power Station's levelized kilowatt hour costs will average nearly $.04 a kilowatt more than a kilowatt produced by oil.

ment, it will be singularly the State's responsibility to deal with the consequences.

3. The accident at Three Mile Island, (TMI) and the federal response to it, demonstrated conclusively that the state's obligation to assure the financial viability of the investor owned utility is unequivocable and paramount.

On-site damage to property at TMI exceeded $1 billion; it was not covered by any federal insurance program and General Public Utilities (GPU) was not obligated by federal law to have any such insurance coverage. Moreover, because GPU was obligated to provide electricity to consumers, it was forced to purchase "replacement power" from other utilities at considerable expense and, of course, GPU was obligated to meet interest payments on its loans and deal with the severe impact to stockholders and to investor confidence. No federal insurance program existed to deal with these economic consequences. The responsibility fell to the Pennsylvania and New Jersey Public Utility Commissions.

Confronted with these harsh economic consequences–and a claim by GPU to recover $4 billion dollars because the Nuclear Regulatory Commission (NRC) allegedly was negligent in the performance of its regulatory duties–the NRC made clear that *its* responsibility under the Atomic Energy Act was quite limited:

> Within (the Atomic Energy Act) framework the regulated industry (i.e., the licensees and their suppliers and consultants) bears the primary responsibility for the proper construction and safe operation of licensed nuclear facilities. The Nuclear Regulatory Commission has the statutory responsibility for prescribing licensing standards to protect public health and safety and for inspecting industry's activities against these standards. The

> Commission does not thereby certify to the industry that the industry's designs and procedures are adequate to protect its equipment or operations.
>
> This is the understanding that prevailed when NRC issued the license to operate TMI-2, as it had for more than 20 years of commercial nuclear power plant licensing and as it continues to prevail today. Therefore the claim is denied.[13]

Moreover, even before Three Mile Island the NRC expressly relied on the "likelihood" that state Public Utility Commissions would finance "with favorable rate decisions" the "estimated construction costs and related fuel cycle costs" of a nuclear power plant.[14]

The NRC's determination about the precisely defined nature of its economic responsibility under the Atomic Energy Act, and its deference to the obligation of the state and utility to assume the financial responsibility for a *nuclear* accident (and nuclear construction and operation) demonstrates its practical application of pre-emption notions are quite limited in scope. In light of the NRC interpretation of the Atomic Energy Act to preclude any responsibility for the financial needs of utilities or the financial costs to consumers, the assertion by the United States that the "responsibility for balancing (California's financial) concern with the larger

---

[13]In the Matter of Federal Tort Claim of General Public Utilities Corp., et al, Nuclear Regulatory Commission, Memorandum and Order (CL1-80-10), June 8, 1981, Slp Op. 4-5.

[14]*Public Service Company of New Hampshire, et al (Seabrook Station,* Units 1 and 2). CLI-78-1, 7 NRC 1 (1978), Affirmed in the First Circuit Court of *Appeals in New England Coalition on Nuclear Pollution v. N.R.C.*, 582 582 F.2d 87 (1st Cir. 1978).

purposes of the Atomic Energy Act has been left with the NRC (Jurisdiction Statement Brief at 18), has no foundation in law or practice. Congress never gave to the NRC such a "balancing" responsibility and the NRC has never sought to intrude into the economic responsibility that "traditionally and under the law" belongs to state government.

Consistent with its position in the tort claim of General Public Utilities the NRC has unambiguously washed the federal government's hands of any authority over the financial consequences associated with nuclear power. In March, 1982, the NRC adopted rules that eliminated the need for license applicants to establish any financial qualifications prior to licensing. (Amendment to 10 (FR parts 2 and 50, Vol. 47 Fed. Reg. No. 62, March 31, 1982) In addition, the NRC adopted rules which eliminated any requirement for the applicant to establish a need for the power that the project would produce. (Amendment to 10 CFR 51, 47 Fed. Reg. No. 59, March 26, 1982). The NRC's posture, therefore, has been to absolve the federal government from any regulatory function that relates to the need for the facility, financial capabilities of developer or financial consequences associated with nuclear power.

It cannot therefore be said that any of the tests for implied pre-emption have been met. The California legislation does not conflict with an area of utility regulation that the federal government regulates. Neither has California's regulation of its local utilities invaded an area so pervasively regulated that California could be found to have thwarted the accomplishment and full purposes of the Atomic Energy Act as the NRC has most clearly articulated in its most recent decisions which continue to narrow its focus on purely technical matters.

CONCLUSION

Congress never contemplated that nuclear power would be developed exclusively by the Federal government. As has been shown, the early development of nuclear power was left in the hands of the states to regulate the critical economic development by their utilities. The decision as to whether nuclear power was right for a state was not made by the federal government–but rather by local public utility commissions. An extension of a role that State public utility commissions have played for nearly a century before the advent of nuclear power and which is consistent with our federal form of government. The court of appeals recognized California's fundamental role in protecting its energy future and it is urged that this court uphold that decision.

Respectfully submitted,

CARL R. AJELLO
Attorney General

ROBERT S. GOLDEN, JR.
Assistant Attorney General
Counsel of Record

Office of the Attorney General
One Central Park Plaza
New Britain, Connecticut 06051
(203) 827-1553

NEIL T. PROTO
Special Assistant Attorney General
New Haven, Connecticut 06512

Amicus Brief

5

Office - Supreme Court, U.S.
FILED
SEP 3 1982
ALEXANDER L. STEVAS
CLERK

No. 81-1945

IN THE

Supreme Court of the United States

OCTOBER TERM, 1982

PACIFIC GAS AND ELECTRIC COMPANY AND SOUTHERN CALIFORNIA EDISON COMPANY, *Petitioners*,

v.

STATE ENERGY RESOURCES CONSERVATION AND DEVELOPMENT COMMISSION, *et al.*, *Respondents*.

On Writ Of Certiorari To The United States Court of Appeals For the Ninth Circuit

BRIEF AMICUS CURIAE OF EDISON ELECTRIC INSTITUTE IN SUPPORT OF PETITIONERS

JOSEPH B. KNOTTS, JR.
DONALD K. DANKNER
DEBEVOISE & LIBERMAN
1200 Seventeenth Street, N.W.
Washington, D.C. 20036
(202) 857-9800

Of Counsel:
ROBERT L. BAUM
Edison Electric Institute
1111 19th Street, N.W.
9th Floor
Washington, D.C. 20036

September 3, 1982

PRESS OF BYRON S. ADAMS PRINTING, INC., WASHINGTON, D.C.

TABLE OF CONTENTS

	Page
I. Interest of Amicus Curiae	1
II. Summary of Argument	3
III. Argument	4
A. Sections 25524.1(b) And 25524.2 Of The California Nuclear Laws Conflict With The Atomic Energy Act And Related Federal Legislation And Are Thus Preempted Under The Supremacy Clause Of The Constitution Of The United States.	4
B. The Practical Effect Of The Court Of Appeals Decision Is Contrary To The National Interest.	5
IV. Conclusion	12

TABLE OF AUTHORITIES

CASES: Page

First Iowa Hydro-Electric Cooperative v. *FPC*, 328 U.S. 152 (1945) 8, 9, 10

Minnesota v. *NRC*, 602 F.2d 412 (D.C. Cir. 1979) 2

Natural Resources Defense Council, Inc. v. *NRC*, 582 F.2d 166 (2d Cir. 1978) 2

Northern States Power Co. v. *Minnesota*, 447 F.2d 1143 (8th Cir. 1971), *aff'd mem.*, 405 U.S. 1035 (1972) . 4

Pacific Legal Foundation v. *State Energy Resources Conservation & Development Commission*, 659 F.2d 903 (9th Cir. 1981) 5, 6

STATUTES:

Atomic Energy Act of 1954, as amended, 42 U.S.C. §§ 2011, *et seq.*:

§ 11, 42 U.S.C. § 2014 4

§ 271, 42 U.S.C. § 2018 ..... 6, 7

§ 274, 42 U.S.C. § 2021 ..... 4, 5, 6, 7

Energy Reorganization Act of 1974, as amended, 42 U.S.C. §§ 5801, *et seq.*:

§ 202, 42 U.S.C. §§ 5842, 5846 5

The Warren-Alquist Act. California Public Resources Code § 25500 *et seq.*:

§ 25524.1(b) 2, 3, 5

§ 25524.2 ..... 2, 3, 5

Conn. Gen. Stat. Ann. § 22a-136 (West Supp. 1981) .. 10

Me. Rev. Stat. Ann. tit. 10, §§ 252-253 (1980) 10

Mont. Code Ann. §§ 75-20-1201 to 75-20-1205 (1979) .. 10

Act of July 1, 1979, ch. 510, 1979 Ore. Laws 629 10

Vt. Stat. Ann. tit. 30 § 248(c) (Supp. 1981) 10

Table of Authorities Continued

Page

REGULATIONS:

Nuclear Regulatory Commission

10 C.F.R. Part 50 5
10 C.F.R. Part 60 5
10 C.F.R. Part 70 5
10 C.F.R. Part 72 5
10 C.F.R. § 150.15 5

MISCELLANEOUS:

G. Allison, *et al.* "Governance of Nuclear Power," John F. Kennedy School of Government, Harvard University, September 1981 11

Advanced Plans for Construction of Facilities, Findings of Fact and Conclusions of Law [1964-1981. New Developments Transfer Binder] Nuclear Reg. Rep. (CCH) ¶ 20,093 10

Mass. H. Res. 5201, adopted May 20, 1981, finalized May 28,. 1981 10

Notice of Proposed Rulemaking, "Storage and Disposal of Nuclear Waste," 44 Fed. Reg. 61372 (1979) 2

IN THE

Supreme Court of the United States

OCTOBER TERM, 1982

No. 81-1945

PACIFIC GAS AND ELECTRIC COMPANY AND SOUTHERN CALIFORNIA EDISON COMPANY, *Petitioners*,

v.

STATE ENERGY RESOURCES CONSERVATION AND DEVELOPMENT COMMISSION, *et al.*, *Respondents*.

On Writ Of Certiorari To The United States Court of Appeals For the Ninth Circuit

Edison Electric Institute ("EEI") submits this brief *amicus curiae* supporting petitioners Pacific Gas and Electric Company and Southern California Edison Company. The consents of each of the parties have been obtained and duly filed with the Clerk in accordance with Rule 36.

I. INTEREST OF AMICUS CURIAE

EEI is the national association of investor-owned utility companies in the United States. Its members serve 99.1% of all customers of the investor-owned segment of the industry and 77.1% of the nation's electricity users. EEI's members are adversely affected by the decision of the court of appeals reversing the district court.

At issue here are §§ 25524.1(b) and 25524.2 of California Public Resources Code.[1] Section 25524.1(b) subjects federal determinations regarding spent fuel storage capacity to final review by the California Energy Commission, and § 25524.2 has placed a moratorium on new nuclear plants in California by effectively overriding the federal government's decision to license nuclear plants pending a final decision on the technology or means for the permanent disposal of high level nuclear waste.[2] The question presented—whether §§ 25524.1(b) and 25524.2 are preempted under the supremacy clause of the Constitution—is of vital interest to EEI.[3]

Indeed, this case has enormous implications for the members of EEI. Presently, EEI members own and operate 67 of the nation's 81 nuclear power plants licensed to operate. Its members expect to operate another 64 plants which are under construction or on order.

EEI has an interest in uniform regulation of nuclear power plants. The court of appeals accepted, at face value, selected statements from the legislative history of the California nuclear laws that the nuclear waste provi-

---

[1] Sections 25524.1(b) and 25524.2 are set out in full in Petitioners' Appendix at 207-210.

[2] This decision by the federal government was upheld in *Natural Resources Defense Council, Inc.*, v. *NRC*, 582 F.2d 166 (2nd Cir. 1978); *see also Minnesota* v. *NRC*, 602 F.2d 412 (D.C. Cir. 1979) and the pending waste confidence rulemaking before the NRC which was initiated at 44 Fed. Reg. 61372 (1979).

[3] EEI believes that both §§ 25524.1(b) and 25524.2 are ripe for review. We have not briefed the ripeness questions since we are confident that we will have nothing to add to Petitioners' brief in this regard.

sions were enacted for economic reasons rather than to halt new nuclear plant construction because of concerns about radiation hazards. By its rulings, the court of appeals left the door open to Balkanized state regulation of existing nuclear plants, as well as future ones.

EEI's members have the obligation as public utilities to meet the future power needs for most of our nation's electric users. Over the next 20 years, it would be conservative to assume that electric utilities will have to double their installed generating capacity.[1] Because hydroelectric resources available for development have been largely exhausted, and because oil and natural gas are very expensive and oil is especially vulnerable to interruption of foreign supplies, coal and nuclear are the most realistic fuels for the nation's electric utilities. In enacting the Atomic Energy Act, Congress has decided that nuclear power should be developed as an option. The court of appeals below held that California can eliminate that option there. If the other states follow the lead of California (5 have already taken comparable action), the nuclear option will be to that extent foreclosed for our nation and to the detriment of EEI's members who have a responsibility to plan and operate an efficient and reliable system of generation.

II. SUMMARY OF ARGUMENT

This Court should reverse the decision of the court of appeals. Sections 25524.1(b)and 25524.2 of the California nuclear laws are preempted under the supremacy clause

---

[1] Such an assumption would be consistent with approximately a 3.5 per cent annual rate of growth, which is in the mid range of current estimates in the literature. This is in addition to replacement of existing capacity because of obsolescence or for other reasons.

of the Constitution because they conflict with the Atomic Energy Act and other federal laws regarding the licensing of nuclear power plants. The decision of the court of appeals, if allowed to stand, will establish a dual final authority between the states and the federal government on nuclear safety matters. Such dual regulation has no basis in the Atomic Energy Act and related federal laws and, as a practical matter, forecloses the nuclear option.

III. ARGUMENT

A. Sections 25524.1(b) And 25524.2 Of The California Nuclear Laws Conflict With The Atomic Energy Act And Related Federal Legislation And Are Thus Preempted Under The Supremacy Clause Of The Constitution Of The United States.

In 1972, this Court summarily affirmed *Northern States Power Company* v. *Minnesota*, 447 F.2d 1143 (8th Cir. 1971), *aff'd mem.*, 405 U.S. 1035 (1972). In *Northern States*, the court of appeals held that the federal government has expressly preempted regulation of the construction and operation of nuclear plants. 447 F.2d at 1149-1150. It found such express preemption in § 274.c(1) of the Atomic Energy Act (the "Act") (42 U.S.C. 2021(c)(1)), which gives the Nuclear Regulatory Commission sole, non-delegable responsibility for "the construction and operation of any production or utilization facility."[5] This case involves another instance of express preemption under the same section of the Act, which, in another subsection, assigns to the NRC sole, non-delegable responsibility for

> the disposal of such other byproduct . . . or special nuclear material as the Commission determines . . .

---

[5] A power reactor is a "utilization facility." 42 U.S.C. § 2014.cc.

> should, because of the hazards or potential hazards thereof, not be so disposed of without a license from the Commission. (42 U.S.C. § 2021(c)(4)).[6]

The California laws at issue here invade the province of the NRC by interposing requirements for state approval of spent fuel storage arrangements and the federal program for high level waste disposal, both of which are subject to NRC regulation and licensing. By application of *Northern States*, the court of appeals should have upheld the district court and found these laws preempted. But the court of appeals did not. It concluded that § 25524.1(b) was not ripe and, as to the California Nuclear laws it did reach, including § 25524.2, it distinguished *Northern States* on the ground that the California laws had as their avowed purpose not the regulation of nuclear safety, but traditional state economic regulation. 659 F.2d at 923-925. The Energy Commission argued that the purpose of the law was to permit evaluation of project costs. Its rationale was that, without "adequate" provision for spent fuel storage and disposal of high level waste, the nuclear project might prove too costly to warrant approval.

That the "economic regulation" argument is merely a smoke-screen behind which the true objective was to achieve a nuclear plant construction moratorium in California has been persuasively argued by petitioners PG&E

---

[6] NRC has implemented this provision in, *inter alia*, 10 C.F.R. §§ 150.15(a)(4), (5); 10 C.F.R. Parts 50 and 70 (as to "at reactor" storage of spent fuel in facilities integral to reactor operation); and 10 C.F.R. Part 72 (as to independent spent fuel storage facilities "at" or "away from" reactors). Under Section 202 of the Energy Reorganization Act of 1974, (42 U.S.C. § 5842, 5846) Department of Energy facilities for disposal of high level waste from licensed activities are subject to NRC licensing. The NRC's rules for licensing a DOE waste repository are found in 10 C.F.R. Part 60.

and SCE (Pet. at 18-20). As to the spent fuel storage and waste disposal sections of the California nuclear laws, the veneer of economic regulation is so tenuous as to be transparent.

If we assume, *arguendo*, that these two provisions were in fact inspired by economic considerations, the question remains whether state regulation can properly coexist with federal regulation and federal programs (concurrent regulation). Respondent Energy Commission argued below that sections 271 and 274(k) of the Act (42 U.S.C. § 2018 and § 2021(k)) left undisturbed traditional state economic regulation of the generation, sale and transmission of electric power. (App. Brief in court of appeals, 22-23). The court of appeals so held, stating that the Act left it to "the state's regulatory authority to keep nuclear plants from being built, if the plants are inconsistent with the state's power needs or environmental or other interests." 659 F.2d at 926.

If it were clear that the court of appeals intended this statement to be read as if it included the phrase "on a non-discriminatory basis and not as a device to regulate safety under the guise of economic or environmental regulation," then it would be unexceptional as a generality. But here, where the California nuclear laws clearly seek to regulate safety matters, this statement of the court of appeals, if allowed to stand, is an open invitation to California and other states to regulate nuclear power safety as long as they are careful to label what they are doing as economic regulation. The *traditional* state activities conceived by Congress—issuance of certificates of convenience and necessity based on evaluation of the need for additional generating capacity, and regulation of rates and terms of service—were separate from and did not overlap NRC licensing and regulation under the Act.

Congress clearly did not intend to establish a dual, final authority over nuclear safety matters. In the Senate report on section 274, the Joint Committee on Atomic Energy recognized "the dangers of conflicting, overlapping, and inconsistent standards in different jurisdictions to the hinderance [sic] of industry and jeopardy of public safety" S. Rep. No. 870, 86th Cong., 1st Sess., reprinted in [1959] U.S. Code Cong. and Ad. News 2872, 2879. The Joint Committee made it clear that "[i]t is not intended to leave any room for the exercise of dual or concurrent jurisdiction by States to control radiation hazards by regulating byproduct, source, or special nuclear material." *Id.*

In sum, sections 271 and 274(k) were intended as a shield, not as a sword for the states. At most, it leaves to the states regulation of the need for additional generation, rates, conditions of service and the like which states have *traditionally* exercised over plants employing fossil fuels. It certainly does not authorize the state to go beyond its traditional role and extend its regulations into areas expressly consigned to the NRC. *See* 42 U.S.C. 2021(c)(4), *supra*. Sections 271 and 274(k) were never intended to permit a state to prevent nuclear plant construction on the ground that the state was dissatisfied with federal requirements (or lack thereof) in areas within the province of the NRC or the Department of Energy.

B. The Practical Effect Of The Court Of Appeals Decision Is Contrary To The National Interest

1.

What is the practical effect of the decision of the court of appeals on the decision-making of EEI's members? Suppose that an electric utility needs to add 1200 MW of additional capacity by the mid-1990's. Suppose too that coal and nuclear are the only realistic options; that financ-

ing for the project can be secured regardless of whether a coal or nuclear plant is built; that the weight of scientific authority finds that nuclear power is environmentally acceptable; and that the price of electricity from the nuclear plant would be lower than from the coal plant.

Logically, under these assumptions, the utility would choose the nuclear option. But that is not the case in California or other states which may follow its lead. The utility would have to take into account at least one additional factor: due to events beyond its control, it could lose its entire investment in a nuclear plant. It could spend millions of dollars in preconstruction costs only to find that the state, relying on the court of appeals decision below, has decided to place a moratorium on all new projects. Indeed, the California nuclear laws were principal factors forcing PG&E and SCE to defer their nuclear projects at a tremendous cost.

In analogous circumstances, in *First Iowa Hydro-Electric Cooperative* v. *FPC*, 328 U.S. 152 (1945), this Court corrected an unconstitutional invasion by a state in the federal licensing of hydroelectric projects. There, an Iowa statute required a state permit for all hydroelectric projects, including those subject to the FPC's jurisdiction. Iowa sought to invoke that statute to prevent the FPC from licensing a project which the federal agency had found was in the public interest.

The Court held that the Federal Water Power Act superseded the Iowa statute. In reviewing the legislative history of the Water Power Act, the Court found that "Congress was concerned with overcoming the danger of divided authority [between the states and the federal government] so as to bring about the needed development of water power." 328 U.S. at 174. Before passage of the Water Power Act in 1920, hydroelectric development

was nearly at a standstill; investors were reluctant to place their money in hydroelectric projects in part because of the inherent risks of concurrent state-federal jurisdiction. *Id.* The Court explained:

> The present Act was distinctly an effort to provide a federal control over and give federal encouragement to water power development. It grew out of a bill prepared by the Secretaries of War, Interior and Agriculture. It was recommended by a Special Committee on Water Power created in the House of Representatives at the suggestion of President Wilson. See Statement by Representative Sims, Chairman of the Committee on Water Power, 56 Cong. Rec. 9797, 9798. The bill was to provide "a method by which the water power of the country, wherever located, can be developed by public or private agencies *under conditions which will give the necessary security to the capital invested* and at the same time protect and preserve every legitimate public interest. . . . *The problems are national, rather than local; they transcend state lines and cannot be handled adequately except by or in conjunction with national agencies.*" Statement by David F. Houston, Secretary of Agriculture, quoted in H.R. Rep. No. 61, 66th Cong., 1st Sess. p. 5 [328 U.S. at 180, n.223, emphasis added].

The Court reasoned that compliance with the Iowa licensing statute would frustrate the federal licensing process:

> Compliance with State requirements that are in conflict with federal requirements may well block the federal license . . . . Similarly, compliance with the engineering requirements of the State Executive Council, if additional to or different from the federal requirements, may well result in duplications of expenditures that would handicap the financial success of the project.

* * *

> A dual final authority, with a duplicate system of state permits and federal licenses required for each project, would be unworkable. "Compliance with the requirements" of such a duplicated system of licensing would be nearly as bad. Conformity to both standards would be impossible in some cases and probably difficult in most of them. 328 U.S. at 167-168.

We do not contend that NRC has the same, broad "public interest" jurisdiction over nuclear projects which the FERC (formerly the FPC) has over hydroelectric projects. Nonetheless, storage and disposal of spent fuel or high level waste are just as much the exclusive province of NRC as the conditions under which a hydro project may be licensed are the province of FERC. Thus, as in *First Iowa*, we urge this Court to protect the NRC's licensing process from an unconstitutional invasion by the states.

2.

The implications of the California nuclear laws reach far beyond the borders of that state. If the California laws are upheld, other states are likely to follow suit. In the appeal below, 23 states filed *amicus curiae* briefs supporting California's efforts. To date, 5 states, in addition to California, have effected nuclear moratoria by statute or administrative action.[7] The possibility that more states will follow the lead of California is not remote in the least.

---

[7] Conn. Gen. Stat. Ann. § 22a-136 (West Supp. 1981); Me. Rev. Stat. Ann. tit. 10 §§ 252-253 (1980); Mont. Code Ann. § 75-20-1201 to 75-20-1205 (1979); Act of July 1, 1979, ch. 510, 1979 Ore. Laws 629; *see* Advanced Plans for Construction of Facilities, Findings of Fact and Conclusions of Law [1964-1981, New Developments Transfer Binder] Nuclear Reg. Rep. (CCH) ¶ 20,093 at 16,562 (Wisconsin Public Service Commission). *See also* Mass. H. Res. 5021, adopted May 20, 1981, finalized May 28, 1981; Vt. Stat. Ann. tit. 30 § 248(c) (Supp. 1981).

The nation's electric utilities, despite a recent decline in demand, still have to install a considerable amount of new generating capacity (*see* p. 3, *supra*). The options available to EEI's members for meeting their needs for new generating capacity are limited. Unconventional sources such as solar, windmills and geothermal will add some capacity, but the bulk of the new generation will have to come from conventional sources.[8] They include hydro, fossil fuels (oil, natural gas and coal) and nuclear.

Of the conventional sources, coal and nuclear are the only viable options. Our nation's hydroelectric potential has been almost fully exploited. The price of oil has increased about 15 fold since 1973 and its supply is insecure. Over 50% of the oil consumed in the United States is imported. This supply is vulnerable to disruption for political, economic or military reasons or because of terrorist activities. Natural gas is not a tenable option because, like oil, it is high priced and a large quantity is imported.

Thus, the electric utilities are left with coal and uranium as economical and secure domestic sources for fuel. Coal alone, however, cannot be counted upon (nor should it) to meet our needs.[9]

In enacting the Atomic Energy Act, Congress decided that it was in the interest of our national security and a healthy economy to develop and maintain the nuclear power option. That decision is even more compelling today. We urge this Court to reverse the decision of the court of appeals below because it allows state laws to stand which frustrate these important national interests.

---

[8] G. Allison, *et al.* "Governance of Nuclear Power" John F. Kennedy School of Government, Harvard University, Sept. 1981, at 5.

[9] *Id.* at 6.

CONCLUSION

For the foregoing reasons, the decision of the court of appeals should be reversed.

Respectfully submitted,

JOSEPH B. KNOTTS, JR.
DONALD K. DANKNER
DEBEVOISE & LIBERMAN
1200 Seventeenth Street, N.W.
Washington, D.C. 20036
(202) 857-9800

Of Counsel:
ROBERT L. BAUM
Edison Electric Institute
1111 19th Street, N.W.
9th Floor
Washington, D.C. 20036

September 3, 1982

Amicus Brief

6

MOTION FILED
SEP 1 1982

No. 81-1945

IN THE
Supreme Court of the United States
OCTOBER TERM, 1981

PACIFIC GAS AND ELECTRIC COMPANY AND
SOUTHERN CALIFORNIA EDISON COMPANY,
Petitioners

vs.

STATE ENERGY RESOURCES CONSERVATION AND
DEVELOPMENT COMMISSION, *et al*,
Respondents

On a Writ of Certiorari to the United States Circuit Court of Appeals for the Ninth Circuit

---

MOTION FOR LEAVE TO FILE BRIEF AND BRIEF AMICUS CURIAE OF THE FUSION ENERGY FOUNDATION IN SUPPORT OF PETITIONER

MAX DEAN
1616 Genesee Towers
120 East First Street
Flint, Michigan 48502
(313) 235-5631
Attorney for
Fusion Energy Foundation

WILSON - EPES PRINTING CO., INC. - 789-0096 - WASHINGTON, D.C. 20001

IN THE

Supreme Court of the United States

OCTOBER TERM, 1981

No. 81-1945

PACIFIC GAS AND ELECTRIC COMPANY AND SOUTHERN CALIFORNIA EDISON COMPANY,
Petitioners

vs.

STATE ENERGY RESOURCES CONSERVATION AND DEVELOPMENT COMMISSION, *et al*,
Respondents

On a Writ of Certiorari to the United States Circuit Court of Appeals for the Ninth Circuit

---

MOTION OF THE FUSION ENERGY FOUNDATION FOR LEAVE TO FILE A BRIEF AMICUS CURIAE IN SUPPORT OF PETITIONER

The Fusion Energy Foundation respectfully moves this Court for leave to file the accompanying brief in this case as amicus curiae.

1. The attorneys for Pacific Gas Electric Company and Southern California Edison Company, Petitioners herein, have given their consent for the filing of this brief by the Fusion Energy Foundation.

2. The consent of chief attorney for Respondents, Mr. Lawrence Tribe, has been requested and has not yet, at this writing, been received.

3. The Fusion Energy Foundation has a special interest in this case for the following reasons:

(a) Your Petitioner is a charitable, educational and scientific organization with a national membership of about 14,000 and with a Michigan membership of about 680. It is devoted to encouraging research and development and educating its members and the general public as to the importance and necessity of expanding energy production and the development of inexhaustible sources of energy for the future. It publishes the monthly magazine FUSION and a bi-monthly THE YOUNG SCIENTIST. FUSION is circulated throughout the English speaking world having a circulation in the United States of 98,916. It is also published in Spanish. Sister organizations exist in West Germany, Sweden and Mexico.

(b) The FUSION ENERGY FOUNDATION has organized and sponsored seminars in the United States and foreign countries on fusion, coal, gas, oil and other sources of energy and has been an active advocate of the necessity of fission power development and expanded utilization to fulfill our present and future energy needs.

(c) The Foundation's publication FUSION is dedicated to providing accurate and comprehensive information on advanced energy technologies and policies. FUSION is committed to restoring American scientific and technological leadership. FUSION coverage of the frontiers of science focuses on the self-developing qualities of the physical universe in such areas as plasma physics the basis for fusion power as well as biology and microphysics and includes groundbreaking studies of the historical and development of science and technology.

(d) The Foundation has developed the Riemanian economic model which incorporates the concepts of thermo-

dynamics and hydro-dynamics as developed by Liebnitz and Riemanian. This model has been used by the Foundation for economic planning for growth in India and Mexico and analysis of growth in Korea as well as the United States.

(e) The Fusion Energy Foundation shares a policy commitment with others that the proper historic mission of the United States as a nation is essentially expressed by its historic development and present potentialities as an industrial power. The specific and urgent mission of this nation is to mobilize those traditions and capabilities to the combined objectives of becoming a leading instrument for the industrial and agricultural development of the world, and meanwhile pursue its domestic economic development to the end of increasing its capabilities to fulfill that global mission.

4. The Fusion Energy Foundation believes that there are very fundamental issues of law at stake in this case which have not been, nor do we believe will be sufficiently addressed by the parties to the case. These issues are:

(a) Whether under the Constitution of the United States, even in the absence of United States Congressional action, that state legislation which inhibits, delays, or prohibits nuclear power generation is unconstitutional and invalid.

(b) What is the legal criteria to be used under the Constitution of the United States in deciding whether state legislation unconstitutionally inhibit, delays or prohibits nuclear power generation?

5. It is the position of the accompanying brief that:

(a) Congress has not allocated a power to California to regulate production of nuclear power generation to its detriment or prohibition.

(b) Congress could not constitutionally allocate such power to any state and where authority is delegated to

the states to regulate at all the federal enabling statute must be construed to uphold the constitutional mandate of scientific, technological, and industrial progress.

(c) Congress could not take the action California took for it must uphold the constitutional mandate for scientific, technological and industrial progress which can only be observed today by the utilization of electrical energy at an increased rate and the further development of electrical generation based primarily on nuclear power.

WHEREFORE, in keeping with this Court's longstanding policy in cases involving questions of important public interest to have all the light it may have on the questions before it the Fusion Energy Foundation requests leave to file in this cause the attached brief which it sincerely believes will present aspects and facets of the questions in these causes which are not presented in the briefs of the parties.

FUSION ENERGY FOUNDATION

By: /s/ Max Dean
MAX DEAN
Attorney at Law
1616 Genesee Towers
Flint, Michigan 48502

MEMORANDA IN SUPPORT OF THIS MOTION FOR LEAVE TO FILE BRIEF AMICUS CURIAE

This Motion is made in compliance with Supreme Court Rule 36.

TABLE OF CONTENTS

	Page
Index of Authorities	ii
Interest of the Amicus Curiae with incorporation by reference of the Motion for leave to file this brief	1
Argument	3
The California Statutes Under Scrutiny and Laws of Similar Content Promulgated by Any Body Are Invalid Under the United States Constitution	3
Introduction	3
A. Congress Has Not Allocated a Power to California to Regulate Production of Nuclear Power Generation to Its Detriment or Prohibition	4
B. Congress Could Not Constitutionally Allocate Such a Power to Any State and Where Authority Is Delegated to the States to Regulate at All the Federal Enabling Statute Must Be Construed to Uphold the Constitutional Mandate of Scientific, Technological and Industrial Progress Which Can Only Be Observed Today by the Utilization of Electrical Energy at an Increased Rate and the Further Development of Electrical Generation Based Primarily on Nuclear Power	7
C. Congress Could Not Take the Action California Took for it Must Uphold the Constitutional Mandate for Scientific, Technological and Industrial Progress Which Can Only Be Observed Today by the Utilization of Electrical Energy at an Increased Rate and the Further Development of Electrical Generation Based Primarily on Nuclear Power	17
Conclusion and Suggested Relief	24

INDEX OF AUTHORITIES

Constitution:	Page
Preamble	11
Article I, Sec. 1	11, 12
Article I, Sec. 8, Clause 3	12
Article I, Sec. 8, Clause 8	12
Article IV, Sec. 4	12
Article VI, Sec. 2	12
U.S. Supreme Court Cases:	
Charles River Bridge v. Warren Bridge, 11 Peters 420, 608 (1837)	22
Cooley v. Board of Wardens of Port of Philadelphia, 12 Howard 299 (1951)	8, 9
Dartmouth College v. Woodward, 4 Wheat 518 (1819) 53 US 300	20
Ex Parte Siebold, 100 US 371 (1880)	9
Gibbons v. Ogden, 9 Wheat 1 (1824)	8, 19
Grant v. Raymond, 6 Peters 218 (1832)	20
Hoke v. United States, 227 US 307, 323 (1913)	10, 11
McCulloch v. Maryland, 4 Wheat 316 (1819)	20
Van Ness v. Pacard, 2 Peters 144 (1829)	21, 22
U.S. Statutes:	
16 USC Sec. 812	6
36 USC Sec. 173	22
42 USC Sec. 2011	14, 15
42 USC Sec. 2018	4
42 USC Sec. 2019	5
42 USC Sec. 2021	4
42 USC Sec. 2021(k)	5
42 USC Sec. 2131 through 2140	5
42 USC Sec. 2451	23
42 USC Sec. 9302(a)(9)	15, 16, 17
42 USC Sec. 9302(a)(1)-(9)	14
Treaties:	
The International Atomic Energy Treaty (1957) Article 3, subsections (a) through (f) 8 UST 1093; 276 UNTS 3	13, 14
The European Atomic Energy Community (Euratom) (1958)	14

INDEX OF AUTHORITIES—Continued

	Page
California Statutes:	
Warren-Alquist State Energy Resources Conservation and Development Act (Public Resources Code):	
Sections 25524.1, 2 and 3	3
Sections 25503, 25504, 25516 and 25516	3
Treatises:	
Commentaries on the Constitution (1833) Joseph Story:	
II Sec. 1077	20
II Sec. 1082	20
II Sec. 1084	21
The Federalist Papers No. 11 by Hamilton	18, 19
The Federalist Papers No. 32 by Hamilton	7
Laborem Exercens (On Human Work) Papal encyclyal of September 14, 1981	23

IN THE

Supreme Court of the United States

OCTOBER TERM, 1981

No. 81-1945

PACIFIC GAS AND ELECTRIC COMPANY AND SOUTHERN CALIFORNIA EDISON COMPANY,
Petitioners

vs.

STATE ENERGY RESOURCES CONSERVATION AND DEVELOPMENT COMMISSION, *et al*,
Respondents

On a Writ of Certiorari to the United States Circuit Court of Appeals for the Ninth Circuit

---

BRIEF OF THE FUSION ENERGY FOUNDATION AS AMICUS CURIAE

By leave of this Court the Fusion Energy Foundation files this Brief as amicus curiae in support of the Petitioners.

INTEREST OF THE AMICUS CURIAE

The interests of the amicus curiae are described in the accompanying Motion to file a brief to which this Brief is attached.

STATEMENT OF THE CASE

The United States Congress adopted the Atomic Energy Act of 1954 under the commerce power to insure our national progress. The petitioning utility companies undertook to construct and operate nuclear powered electrical generating plant as licensees of the Nuclear Regulating Commission created under the Federal Act.

The State of California adopted the Warren-Alquist State Energy Resources Conservation and Development Act in 1975 and 1976 providing among other things for the regulation of the construction and operation of new nuclear power plants including state certification of both the site and the proposed plant and in addition imposing a moratorium on new plants until the state determines that a method of waste disposal exists.

The utilities sued and received a partial summary judgment by the U.S. District Court and after a trial on standing the court on April 25, 1980, adjudged as unconstitutional the Warren-Alquist 1976 amendments in Sections 25524.1, 2 and 3 which indefinitely prohibited new nuclear construction without state approval. Other sections which applied to thermal electric plants were found unconstitutional as they applied to nuclear plant siting including a "three-site review" requirement (Sections 25503, 25504 and 25516); a surrounding population density test (Section 25528) and other sections insofar as they impinged on the jurisdiction of the NRC.

The judgment favorable to petitioners was appealed by the state to the Ninth Circuit of the U.S. Court of Appeals. The Ninth Circuit on October 7, 1981, reversed the district court. The Appeals Court incredibly held:

> ". . . . California has made a judgment only that for the moment, there should be a moratorium on the construction of new nuclear plants. Because California's moratorium provision and the three-site requirement do not fall within the area reserved to the NRC regulatory authority under the Atomic Energy Act of 1954, and because they do not impede congressional goals, we hold they are not preempted."

It is from this erroneous decision petitioners sought certiorari and were granted it by this court. It is in support of petitioners that the FUSION Energy Foundation files this, its brief as a friend of this court.

ARGUMENT

THE CALIFORNIA STATUTES UNDER SCRUTINY AND LAWS OF SIMILAR CONTENT PROMULGATED BY ANY BODY ARE INVALID UNDER THE UNITED STATES CONSTITUTION.

INTRODUCTION

Petitioner utilities brought suit to prevent Respondent California State Agency through exercise of California state statutory enactment from regulating their construction of nuclear energy plants. The precise regulations by this court to which review has been limited are provisions 25524.1 (b) and 25524.2 of the Warren Alquist State Energy Resources Conservation and Development Act set forth verbatim at pages 207, 208, 210, 211 and 212 of the Appendix attached to the Petition for Writ of Certiorai.

This Argument is limited to the thesis that the California statutes under scrutiny and laws of similar content promulgated by any body are invalid under the United States Constitution.

(a) Congress has not allocated a power to California to regulate production of nuclear power generation to its detriment or prohibition.

(b) Congress could not constitutionally allocate such a power to any state and where authority is delegated to the states to regulate at all the federal enabling statute must be construed to uphold the constitutional mandate of scientific, technological and industrial progress which can only be observed today by the utilization of electrical energy at an increased rate and the further development of electrical generation based primarily on nuclear power.

(c) Congress could not take the action California took for it must uphold the constitutional mandate for scientific, technological and industrial progress which can only be observed today by the utilization of electrical energy

at an increased rate and the further development of electrical generation based primarily on nuclear power.

A. Congress Has Not Allocated a Power to California to Regulate Production of Nuclear Power Generation to Its Detriment or Prohibition.

Congress has not allocated a power to California to regulate production of nuclear power generation at all, and certainly not to the detriment of the development of nuclear power nor to its prohibition.

Congress in Section 271 of the Atomic Energy Act of 1954 (42 U.S.C. Sec. 2018) did not "allocate to" or "preserve for" the states authority over the facilities when it legislated:

> "Nothing in this chapter shall be construed to affect the authority or regulations of any federal, state or local agency with respect to the generation, sale, or transmission of electric power produced through the use of nuclear facilities licensed by the commission. *Provided*, that this section shall not be deemed to confer upon any federal, state or local agency any authority to regulate, control, or restrict any activities of the Commission."

As will be developed in this brief the states sovereignity extends to intra-state commerce and the federal congress under our constitution has the exclusive right and duty to legislate in the area of interstate and foreign commerce.

In 42 USC Sec. 2021 Congress authorized the federal Nuclear Regulatory Commission to enter into agreements with the governor of a state to obtain cooperation of the state in regulating (1) by-product materials; (2) source materials; (3) special nuclear materials in quantities not sufficient to form a critical mass. During the duration of such an agreement it was recognized that the state did have the authority to regulate the materials covered by

the agreement for the protection of the public health and safety from radiation hazards.

The provisions of this section detail what is a contract between the federal government and the state government. The Appendix contains no reference to any agreement between California and the federal government and neither does the court below in its opinion.

It is not the claim of California that the "Warren-Alquist State Energy Resources Conservation and Development Act" of California is the fruit of an agreement between the nuclear regulatory agency and the governor of the state of California. California does not claim to be acting in concert with an agreement for the implementation of a national purpose to promote nuclear power. 42 U.S.C. 2021 Section k in providing:

> "Nothing in this section shall be construed to affect the authority of any state or local agency to regulate activities for purposes other than protection against radiation hazards."

may not be construed to "allocate to" or "preserve for" the states a power which they do not have. While congress can contract with or agree to use a state as an agent of the federal government to attain a national purpose it cannot preserve to a state a power it has no constitutional right to confer. Congress did not "allocate to" or "preserve for" California the power to enforce a moratorium on nuclear power plant construction and require more site proposals than required by the NRC.

Both Pacific Gas and Electric Company and Southern California Edison Company are licenses under the Nuclear Regulatory Agency (42 USCA Sections 2131 through 2140) which has provided (42 USCA 2019) since 1954 that:

> "Every licensee under this chapter who holds a license from the Commission for a utilization or

production facility for the generation of commercial electric energy under Section 2133 of this title and who transmits such electric energy in interstate commerce or sells it at wholesale in interstate commerce shall be subject to the regulatory provisions of the Federal Power Act."

The Federal Power Act was adopted in 1920 (16 USCA Sec. 812) and provides for a limited area of state reasonable regulation of services to customers and as to rates to be charged:

"As a condition of the license, every licensee under this chapter which is a public-service corporation, or a person, association, or corporation owning or operating any project and developing, transmitting, or distributing power for sale or use in public service, shall abide by such reasonable regulation of the services to be rendered to customers or consumers of power, and of rates and charges of payment therefor, as may from time to time be prescribed by any duty constituted agency of the state in which the service is rendered or the rate charged. That in case of the development, transmission, or distribution, or use in public service of power by any licensee under this chapter or its customer engaged in public service within a state which has not authorized and empowered a commission or other agency or agencies within said state to regulate and control the services to be rendered by such licensee or by its customer engaged in public service, or the rates and charges of payment therefor, or the amount or character of securities to be issued by any of said parties, it is agreed as a condition of such license that jurisdiction is conferred upon the Commission, upon complaint of any person aggrieved or upon its own initiative, to exercise such regulation and control until such time as the state, shall have provided a commission or other authority for such regulation and control. Provided, that the jurisdiction of the commission shall cease and determine as to each specific matter of regulation and control

prescribed in this section as soon as the state shall have provided a commission or other authority for the regulation and control of that specific matter."

It is submitted that this grant to a state to regulate is the only Congressional to State grant in nuclear power regulation. The statute is not a mere clarification as to respective areas of concurrent power but a deliberate, specific, express delegation of an exclusive power by the Federal Congress to the State to achieve a national objective. The words "reasonable regulation" requires construction by the state in full recognition of the supremacy clause of the United States and its adherence to natural law as expressed in the Constitution, treaties and federal statutes and regulations.

It is submitted that the arguments and the court below mistakenly cast the question raised in the mold of a failure to pre-empt: This is not a question of whether or not the Court "allocated to" or "preserved for" the state an area of concurrent powers by not pre-empting them. The reasoning will be further developed.

B. Congress Could Not Constitutionally Allocate Such a Power to Any State and Where Authority Is Delegated to the States to Regulate at All the Federal Enabling Statute Must Be Construed to Uphold the Constitutional Mandate of Scientific, Technological and Industrial Progress Which Can Only Be Observed Today by the Utilization of Electrical Energy at an Increased Rate and the Further Development of Electrical Generation Based Primarily on Nuclear Power.

The commerce clause is a restraint on state powers. The grant of power to Congress over commerce is unaccompanied by a correlative express restriction on state power. This does not signify states were expected to participate in the power granted Congress subject only to the operation of the supremacy clause. As Hamilton pointed out in the Federalist (No. 32) some powers admit of "concurrent" exercise by the states, and others by

their very nature are "exclusive" and hence render the notion of a like power to pass uniform naturalization laws. The Articles of Confederation produced great state interferences with commerce and the constitutional grant was itself a regulation of commerce in the interest of uniformity. All laws of the states in the confederacy regulating commerce dropped lifeless from the statute books for a want of sustaining power which had been relinquished to Congress. *Gibbons* v. *Ogden* (9 Wheat. 1 (1824))

Even unimplemented by Congress the states would have no power over foreign and interstate commerce although the exercise of police power may appear as a "concurrent" power it is merely police power and must be subordinate to the exclusive power of congress to regulate foreign and interstate commerce. If congress had passed no act regarding nuclear power any state statutes affecting interstate and foreign commerce impinging upon nuclear power must be passed on police power grounds or other grounds than to regulate interstate and foreign commerce. It is clear that there is no concurrent power to regulate interstate and foreign commerce and it would be a violation of the constitution for congress to yield this power to a state.

The very nature of nuclear power "imperatively demands a single uniform rule" operating throughout the country and not just as to safety concerns. In considering the implications of nuclear power to our nation's security and the nation's economy the commerce clause must be asserted as in *Cooley* v. *Board of Wardens of Port of Philadelphia*, 12 Howard 299 (1851). This court can render a decision in this case which will make it clear that by its very nature the entire matter of nuclear power, not just safety and waste disposal, is exclusively a congressional subject matter which must be dealt with only by congress and in a manner consistent with the material and moral progress of our nation. By its very

nature nuclear power is exactly different from local concerns such as local pilotage which Justice Curtis was considering in writing for the Court:

> "Either absolutely to affirm, or deny, that the nature of this power requires exclusive legislation by congress, is to lose sight of the nature of the subjects of this power, and to assert concerning all of them, what is really applicable but to a part. Whatever subjects of this power are in their nature national, or admit only of one uniform system, or plan of regulation, may justly be said to be of such a nature as to require exclusive legislation by congress. That this cannot be affirmed of laws for the regulation of pilots and pilotage is plain. The Act of 1789 contains a clear and authoritative declaration by the first congress, that the nature of this subject is such, that until congress should find it necessary to exert its power, it should be left to the legislation of the states; that it is local and not national; that it is likely to be the best provided for, not by one system, or plan of regulations, but by as many as the legislative discretion of the several states should deem applicable to the local peculiarities of the ports within their limits." (*Cooley, supra.*)

In a case involving the state election laws under which a U.S. congressman was being elected ballot box stuffers were criminally prosecuted under the Federal 1870 Act to enforce the rights of citizens of the United States to vote in the several states of this union. Upon conviction they sought habeas corpus urging that the federal power, unless it provided for the complete control over the whole subject over which it is exercised, must not be exercised to interfer or collide with regulations of the state. In denying the application in *Ex Parte Siebold* (1880) 100 US 371, 25 Law Ed 717 Justice Bradley wrote for the Court:

> ". . . . it seems to be often overlooked that a national constitution has been adopted in this country, estab-

> lished by a real government therein, operating upon persons and territory and things; and which moreover is, or should be, as dear to every American citizen as his state government is. Whenever the true conception of the nature of this government is once conceded, no real difficulty will arise in the just interpretation of its powers. But if we allow ourselves to regard it as a hostile organization, opposed to the proper sovereignity and dignity of the state governments; we shall continue to be vexed with difficulties as to its jurisdiction and authority . . . ."

Justice Bradley concluded by saying:

> "The true doctrine, as we conceive it, is this, that whilst the states are really sovereign as to all matters which have not been granted to the jurisdiction and control of the United States, the Constitution and constitutional laws of the latter are, as we have already said, the supreme law of the land; and, when they conflict with the laws of the states, they are of paramount authority and obligation. This is the fundamental principle on which the authority of the constitution is based; and unless it be conceded in practice, as well as theory, the fabric of our institutions, as it was contemplated by its founders, cannot stand. The questions involved have respect not more to the autonomy and existence of the states, than to the continued existence of the United States as a government to which every American citizen may look for security and protection in every part of the land." (100 US page 405)

In upholding the Mann Act, entitled "An Act to Further Regulate Interstate and Foreign Commerce by Prohibiting the Transportation therein for Immoral Purposes of Women and Girls, and for other Purposes" Justice McKenna writing for the Court said:

> "Our dual form of government has its perplexities, state and nation having different spheres of jurisdiction, as we have said; but it must be kept in mind

> that we are one people; and the powers reserved to the states and those conferred on the nation are adapted to be exercised, whether independently or concurrently, to promote the general welfare, material and moral. This is the effect of the decisions; and surely, if the facility of interstate transportation can be taken away from the demoralization of lotteries, the debasement of obscene literature, the contagion of diseased cattle or persons, the impurity of food and drugs, the like facility can be taken away from the systematic enticement to and the enslavement in prostitution and debauchery of women, and, more insistently, of girls." 227 US 307, 323; 47 L Ed 523; —— SC 308 (1913).

The State of California is but one of fifty states making up this nation. All of the fifty states are subject to a natural law construction of not only the Federal Constitution but the treaties, statutes of Congress and regulations by federal agencies when made pursuant to the Constitution. The California State Constitution necessarily subsumes the purposes, goals and objectives of the Federal Constitution. These objectives are found in the Federal Constitution explicitly. The Preamble states:

> "We the People of the United States in Order to form a more perfect Union, establish justice, insure domestic tranquility, provide for the common defense, promote the general welfare, and secure the blessings of liberty to ourselves and our posterity, do ordain and establish this Constitution for the United States of America."

The Preamble, not a direct source of power for any department of the federal government, is evidence of the origin, scope, purpose, goals, and objectives of the Constitution. In interpreting the terms of a given power the soundest principle of interpretation requires one promote the winning of a goal not its defeat. Article I, Section I of the Constitution provided:

"All legislative powers herein granted shall be vested in a congress of the United States, which shall consist of a Senate and House of Representatives."

This legislative power is used to obtain all the constitutional goals which necessarily cohere with natural law. Written to make explicit the new federal character of this nation by convention delegates, who found their confederacy wanting, our Constitution proclaimed this legislative power:

"The Congress shall have power to lay and collect taxes, duties, imports and excises, to pay the debts and provide for the common defense and general welfare of the United States; but all duties, imports and excises shall be uniform throughout the United States"; (Art I Sec 8)

"To regulate commerce with foreign nations, and among the several states and with the Indian tribes"; (Art I, Sec 8, Clause 3)

"To promote the progress of science and useful arts, by securing for limited time to authors and inventors and exclusive right to their respective writings and discoveries". (Art I, Sec 8, Clause 8)

"The United States shall guarantee to every state in this union a Republican form of government and shall protect each of them against invasion; and on application of the legislature, or the executive (when the legislature cannot be convened) against domestic violence". (Art IV, Sec 4)

"This constitution and the laws of the United States which shall be made in pursuance thereof; and all treaties made, or which shall be made, under the authority of the United States, shall be the supreme law of the land; and the judges in every state shall be bound thereby, anything in the constitution or laws of any state to the contrary not withstanding." (Art VI, Sec 2)

This nation in 1957 by treaty adhered to the International Atomic Energy Agency and has agreed as a nation to support the purposes and objectives of the IAEA as set forth in its statutes which authorized the agency:

(a) To encourage and assist research on and the development of atomic energy for peaceful uses throughout the world, and to act as an intermediary between members for the performance of services or the supply of materials, equipment or facilities;

(b) to make provisions for the materials and services needed for the development of atomic energy for peaceful purposes with due consideration for the needs of under-developed areas of the world;

(c) to foster the exchange of scientific and technical information on the peaceful uses of atomic energy;

(d) to encourage the exchange and training of scientists and experts;

(e) to establish and administer safeguards designed to ensure that special fissionable and other materials made available by the Agency should not be used in such a way as to further any military purpose;

(f) to acquire or establish any facilities, plant and equipment necessary for the execution of its authorized functions. In carrying out these functions the Agency would:

(1) Conduct its activities in accordance with the purposes and principles of the United Nations to promote peace and international co-operation;

(2) establish control over the use of special fissionable materials received by the Agency to ensure that they would be used only for the peaceful purposes;

(3) allocate its resources in such a manner as to secure efficient utilization and the greatest possible general benefit in all areas;

(4) submit reports on its activities annually to the UN General Assembly and, when appropriate, to the Security Council;

(5) submit reports to the Economic and Social Council and other UN organs on matters within their competence;

(6) assist members without any political, economic, military or other conditions incompatible with the provisions of the statute;

(7) show due respect for the sovereign rights of states. (Article 3)

The United States of America also in 1958, concluded agreements with the European Atomic Energy Community (Euratom) promoting the peaceful uses of atomic energy.

The other nations signatory to these treaties had thought themselves neighborly to one United States, not fifty. Our nation cannot maintain its world leadership as congress has specified in the "Magnetic Fusion Energy Engineering Act of 1980" if it does not remain a federated state. (See 42 USCA 9302 (a) (9) below)

Congress pursuant to its power to regulate commerce and to provide for the common defense adopted the Atomic Energy Act of 1954 (42 USCA Sec. 2011) and declared its attachment to natural law principles by expressing congressional policy in this regard as follows:

Section 1. Declaration. . . .

"Atomic energy is capable of application for peaceful as well as military purposes. It is therefore declared to be the policy of the United States that—

(a) the development, use, and control of atomic energy shall be directed so as to make the maximum contribution to the general welfare, subject at all times to the paramount objective of making the maximum contribution to the common defense and security; and

(b) the development, use, and control of atomic energy shall be directed so as to promote world peace, improve the general welfare, increase the standard of living, and strengthen free competition in private enterprise."

and made congressional findings reflecting necessity:

"The Congress of the United States make the following findings concerning the development, use, and control of atomic energy:

(a) The development, utilization, and control of atomic energy for military and for all other purposes are vital to the common defense and security.

(b) Repealed.

(c) The processing and utilization and source, by-product, and special nuclear material affect interstate and foreign commerce and must be regulated in the national interest.

As recently as the "Magnetic Fusion Energy Engineering Act of 1980" (42 USCA 9302) the United States Congress made the following finding and declarations of policy in explicit natural law terms:

"(a) The Congress hereby finds that—

(1) The United States must formulate an energy policy designed to meet an impending worldwide shortage of many exhaustible, conventional energy resources in the next few decades;

(2) the energy policy of the United States must be designed to ensure that energy technologies using essentially inexhaustible resources are commercially available at a time prior to serious depletion of conventional resources;

(3) fusion is one of the few known energy sources which are essentially inexhaustible, and thus constitutes a long term energy option;

(4) major progress in all aspects of magnetic fusion energy technology during the past decade instills confidence that power production from fusion energy systems is achievable;

(5) the United States must aggressively pursue research and development programs in magnetic fusion designed to foster advanced concepts and advanced technology and to develop efficient, reliable components and subsystems;

(6) to insure the timely commercialization of magnetic fusion energy systems, the United States must demonstrate at an early date the engineering feasibility of magnetic fusion energy systems;

(7) progress in magnetic fusion energy systems is currentiy limited by the funds made available rather than technical barriers;

(8) it is a proper role for the federal government to accelerate research, development, and demonstration programs in magnetic fusion energy technologies, and

(9) acceleration of the current magnetic fusion program will require a doubling within seven years of the present funding level without consideration of inflation and a 25 per centum increase in funding each of fiscal years 1982 and 1983.

(b) It is therefore declared to be the policy of the United States and the purpose of this chapter to accelerate the national effort in research, development, and demonstration activities related to magnetic fusion energy systems. Further, it is declared to be the policy of the United States and the purpose of this chapter that the objectives of such program shall be—

(1) to promote an orderly transition from the current research and development program through commercial development;

(2) to establish a national goal of demonstrating the engineering feasibility of magnetic fusion by the early 1990's;

(3) to achieve at the earliest practicable times, but not later than the year 1990, operation of a magnetic fusion engineering device based on the best available confinement concept;

(4) to establish as a national goal the operation of a magnetic fusion demonstration plant at the turn of the twenty-first century;

(5) to foster cooperation in magnetic fusion research and development among government, universities, industry, and national laboratories;

(6) to promote the broad participation of domestic industry in the national magnetic fusion program;

(7) to continue international cooperation in magnetic fusion research for the benefit of all nations;

(8) to promote greater public understanding of magnetic fusion; and

(9) To maintain the United States as the world leader in magnetic fusion.

C. Congress Could Not Take the Action California Took for it Must Uphold the Constitutional Mandate for Scientific, Technological and Industrial Progress Which Can Only Be Observed Today by the Utilization of Electrical Energy at an Increased Rate and the Further Development of Electrical Generation Based Primarily on Nuclear Power.

The founding fathers created the United States upon a foundation of universal Natural Law, in which the Idea of Progress was a central, generative principle. The Constitution and the republican forms of government created thereby were understood by the framers as instrumentalities for realizing the notions of scientific and industrial progress—notions which could not have been

realized as long as the colonies were under the domination of a British monarchy determined to maintain America in a condition of economic backwardness.

History could not be clearer that the foundations of the U.S. Constitution, and indeed of the Republic itself, were forged in the battle for progress. Countless parliamentary statutes and edicts during the first half of the eighteenth century were devoted in stifling industrial and commercial expansion in America. Legislation such as the Iron Act of 1750—an act which prohibited the production of finished iron products in the colonies—put up formidable barriers to the development of manufactures and rising living standards for the colonial population. It was against this constriction of the "American genius for mechanical improvement" that Benjamin Franklin, George Washington, John Adams, Thomas Jefferson and others led a revolution and then constituted the United States of America.

Even after the Revolutionary War was won, however, the sabotage from the British throne did not cease. Instead of legislation, trade warfare, credit cutoff, and the fomenting of anarchy within the newly formed United States was directed to stifle the economic growth of the new republic. If the United States had not created the political structure for a rapidly developing *national* economy, it was virtually doomed to being split among the major European powers and returned to the status of a plantation. The Constitution was the solution arrived at by Washington, Alexander Hamilton, Franklin and other leading patriots, as the lawful political framework for building a strong industrial nation.

Hamilton, writing in the *Federalist* papers, argued for the advantages of the union as follows:

> "Under a vigorous national government, the natural strength and resources of the country, directed to a common interest, would baffle all the combinations

> of European jealousy to restrain our growth . . . An active commerce, an extensive navigation, and a flourishing marine would then be the offspring of moral and physical necessity." (Federalist, No. 11)

In a state of disunion, Hamilton argued, forces determined to stiffle the economic development of the new nation might hope to succeed, with the consequences that

> "That unequalled spirit of enterprise, which signals the genius of the American merchants and navigators, and which is in itself an inexhaustible mine of national wealth, would be stifled and lost, and poverty and disgrace would overspread a country which, with wisdom, might make herself the admiration and envy of the world. . . It belongs to us to vindicate the honor of the human race. . . Union will enable us to do it." (*Id.*)

Under the Constitutional plan of government molded by the Founding Fathers, the United States did become the "admiration and envy of the world" despite continued attempts to restrict America's industrial development, and to restrain our growth." Today such attempts are still perpetrated, but today the efforts to stifle the development of the national wealth come from within, not from Europe.

Hamilton's proposal for, and the establishment of, the Bank of the United States, his *Report on the Subject of Manufactures*, and his *Report on Public Credit* to the Congress, and even the programs of anti-Federalist Thomas Jefferson for public improvements provide overwhelming evidence that the Founding Fathers *unanimously* understood industrial growth to be the fundamental policy commitment of the new nation.

Without question, this was also the understanding of the early Supreme Court, and was expressed most profoundly by Chief Justice John Marshall and Associate Justice Joseph Story. Major decisions of Marshall and Story, such as *Gibbons v. Ogden*, 9 Wheaton 1 (1824),

Dartmouth College v. Woodward, 4 Wheaton 518 (1819), or *McCulloch v. Maryland*, 4 Wheaton 316 (1819), can only be understood as expressing a commitment to a policy of encouraging the rapid development of commerce and industry, and of fashioning the instrumentalities of government to that end.

In *Grant v. Raymond*, 6 Peters 218 (1832), a case involving a disputed patent, Marshall wrote:

> *To promote the progress of useful arts, is the interest and object of every enlightened government.* It entered into the views of the framers of our constitution, and the power 'to promote the progress of science, and useful arts, by securing for limiting times to authors and inventors the exclusive right to their respective writings and discoveries,' is among those expressly given to Congress. . ." (6 Peters 241) (emphasis added)

In his renowed *Commentaries on the Constitution*, (1833), Story noted,

> "A question has recently been made, whether Congress have a constitutional authority to apply the power to regulate commerce for the purpose of encouraging and protecting domestic manufactures." (*Commentaries, II*, § 1077.)
>
> "Now it is well known that, in commercial and manufacturing nations, the power to regulate commerce has embraced practically the encouragement of manufacturers. . .
>
> "It is manifest, from contemporaneous documents, that one object of the Constitution was to encourage manufactures and agriculture by this very use of the power. *(1)*" (II, § 1082)

---

[1] Elliot's Debates, 74, 75, 76, 77, 115; 3 Elliot's Debates, 31, 32, 33; 2 Amer. Museum, 371, 372, 373; 3 Amer. Museum, 62, 554, 557; The Federalist, No. 12, 41; 1 Tuck. Black. Comm. App. 237, 238; 1 American Museum, 16, 282, 289, 429, 432; Id. 434, 436; Hamilton's Report on Manufactures, in 1791; 4 Elliot's Debates, App. 351 to 354.

The lasting relevance of Story's argument emerges with striking clarity in the next section where he argues that although a foreign nation might impose economic restraint upon our country, it is inconceivable that we would impose it upon ourselves.

> "In the first place, if Congress does not possess the power to encourage domestic manufactures by the regulation of commerce, the power is annihilated for the whole nation. . . Such a policy, voluntarily adopted by a free people, in subversion of some of their dearest rights and interests, would be most extraordinary in itself, . . . and utterly without example in the history of the world.
>
> "No man can doubt that domestic agriculture and manufactures may be most essentially promoted and protected by regulations of commerce. . . Why, then, should the power be surrendered and annihilated? It would introduce a perpetuate national debility, if not national ruin. *A foreign nation might, as a conqueror, impose upon us this restraint as a badge of dependence and a sacrifice of sovereignty, to subserve its own interests; but that we should impose it upon ourselves is inconceivable.* The achievement of our independence was almost worthless, if such a system were to be pursued. (II, § 1084 (emphasis added)

Justice Story's opinions from the bench as well as his *Commentaries* expressed the Nation's Constitutional commitment to a standard to law which would encourage public improvements and economic development. In *Van Ness v. Pacard*, 2 Peters 144 (1829), speaking for the court, held that a law which detered the development of land was unreasonable. The case involved the common law principle that fixtures erected upon rental property become part of the property. Story argued that common law must be interpreted according to the fundamental principles of public policy, which were "to encourage

trade and manufactures." During the colonial period, "the country was a wilderness, and the universal policy was to procure its cultivation and improvement." Upon such considerations, the court ruled that the defendant Pacard could remove improvements from the rented property. *Van Ness v. Pacard*, 2 Peters 144, 145 (1829).

Story's famous dissent in the *Charles River Bridge* case located his views of contracts and charters in the context of public development, and, indeed, it could have been written as a commentary on the circumstances surrounding the construction of commercial nuclear reactors today, under the procedures attempted to be imposed by California:

> "I can conceive of no surer plan to arrest all public improvements, founded upon private capital and enterprise, than to make the outlay of that capital uncertain, and questionable both as to security and to productiveness." *Charles River Bridge v. Warren Bridge*, 11 Peters 420, 608, (1837).

To summarize, the Court of Appeals below erred in treating this as a pre-emption case. Its error was due to the accretional positivist law approach to judicial administration with its sociological and existentialist treatment of law as a creation of the majority decision of a group of talking beasts. It is this Aristotlean intellectual climate that creates this problem.

CLOSING SUMMARY OF ARGUMENT

Justices of this Court, other judges, lawyers and the population must understand the impulse of the United States Congress in its amendment (36 USCA Sec. 173) of June 14, 1954, inserting "under God" in the pledge of allegiance so that it reads:

> "I pledge allegiance to the flag of the United States of America and to the Republic for which it stands,

one Nation under God, indivisible, with liberty and justice for all."

This expression springs from the same awareness of order in the universe as the attachment to science expressed in Clause 8, Section 8, Article I of the Federal Constitution. This same comprehension, also held by the FUSION ENERGY FOUNDATION, was most recently expressed by the leader of the largest organized religious body on earth, His Holiness The Pope, John Paul II, in his encyclical of September 14, 1981:

> "Man is made to be in the visible universe an image and likeness of God himself (Genesis 1-26) and he is placed in it in order to subdue the earth (Genesis 1-28).
>
> The church finds in the very first pages of the Book of Genesis the source of her conviction that work is a fundamental dimension of human existence on earth. Be fruitful and multiply and fill the earth and subdue it." (Genesis 1-28) (emphasis in the original)
>
> * * * *
>
> "The expression 'subdue the earth' has an immense range. It means all the resources that the earth (and indirectly the visibly world) contains and which, through the conscious activity of man, can be discovered and used for his ends."

This papal pronouncement reflects modern theological expression of the same commitment to science of our great national state in its creation in 1958 of NASA (42 USCA 2451) and the declaration of Congress that the general welfare and security of the United States require that adequate provision be made for aeronautical and space activity with its conduct to contribute to the "expansion of human knowledge of phenomena in the atmosphere and space." These goals are inseparable from the expansion of energy production in this country.

CONCLUSION AND SUGGESTED RELIEF

This nation has two ways before it. One, is forward. This way is in keeping with the Constitutional direction of the promoting of science and commerce in the interest of the common defense and general welfare. The other way is backward. That is the way of deindustrialization, planned devolution, orchestrated recession, with a fetich of conservationism; and a "cost effective analysis" that says the cheapest way to solve the high cost of energy is not to use it. This way strips our nation of its ability to defend itself. This is a question of national security.

In addition to ruling unconstitutional the statutes to which review has been limited the Fusion Energy Foundation urges this Court to remand with directions to place all federal questions involving nuclear power arising under the Warren-Alquist State Energy Resources Conservation and Development Act under United States District Judge Manuel L. Real of the United States District Court for the Eastern District of California and to retain general jurisdiction over this and to hear appeals directly so as to prevent the delays these state stautes invite. It is further suggested that the Court issue a special rule giving nuclear power quesions in the entire Federal Court system priority status to insure their quick resolution.

Respectfully submitted,

MAX DEAN
1616 Genesee Towers
120 East First Street
Flint, Michigan 48502
(313) 235-5631
Attorney for
Fusion Energy Foundation

Amicus Brief

7

Office - Supreme Court, U.S.
FILED
NOV 10 1982
ALEXANDER L. STEVAS
CLERK

No. 81-1945

IN THE

Supreme Court of the United States

OCTOBER TERM 1982

PACIFIC GAS & ELECTRIC COMPANY, et al.,
Petitioners,

v.

STATE ENERGY RESOURCES CONSERVATION AND DEVELOPMENT COMMISSION, et al.,
Respondents.

BRIEF FOR THE STATES OF ILLINOIS AND NEW HAMPSHIRE AS AMICI CURIAE SUPPORTING AFFIRMANCE

TYRONE C. FAHNER
Attorney General
State of Illinois

JOHN VAN VRANKEN*
ANNE RAPKIN
JEFFREY C. PAULSON
Assistant Attorneys General
Environmental Control Division
188 West Randolph Street
Suite 2315
Chicago, Illinois 60601
(312) 793-2491

GREGORY H. SMITH
Attorney General
State of New Hampshire

E. TUPPER KINDER
Assistant Attorney General
Environmental Protection Division
Office of the Attorney General
State House Annex
Concord, New Hampshire 03301
(603) 271-3678

* *Counsel of Record*

Printed by Authority of the State of Illinois (P.O. 31227—120—11-9-82)

TABLE OF CONTENTS

	PAGE
TABLE OF AUTHORITIES	ii
STATEMENT OF INTEREST OF THE STATE OF ILLINOIS	1
STATEMENT OF INTEREST OF THE STATE OF NEW HAMPSHIRE	3
SUMMARY OF ARGUMENT	5
ARGUMENT	6
I. CALIFORNIA'S MORATORIUM STATUTE IS NOT A REGULATION OF RADIATION HAZARDS	6
A. *Northern States Power Co. v. Minnesota* Does Not Control This Case	6
B. State Electric Utility Regulation Requires Consideration Of The Economics Of Nuclear Construction And Operation	8
II. FEDERAL PROMOTION OF NUCLEAR POWER DOES NOT REQUIRE PREEMPTION OF STATE LAW	14
CONCLUSION	20
APPENDIX	A-1

TABLE OF AUTHORITIES

CASES	PAGE
Cerro Copper Products v. Illinois Commerce Commission, 83 Ill.2d 364, 415 N.E.2d 345 (1980)	8, 9
Commonwealth Edison Co., ICC Docket No. 78-0045	9
Commonwealth Edison Co., ICC Docket No. 79-0214	9
Commonwealth Edison Co., ICC Docket No. 80-0546	9
Commonwealth Edison Co., ICC Docket No. 82-0026	10
Consolidated Edison Co., In The Matter Of, 7 NRC 31 (1978)	18
Duke Power Co. v. Carolina Environmental Study Group, 438 U.S. 59 (1978)	16
Mandel v. Bradley, 432 U.S. 173 (1976)	17
New Hampshire v. Atomic Energy Commission, 406 F.2d 170 (1st Cir. 1969), *cert. den.* 395 U.S. 962	18
New York State Dept. of Social Services v. Dublino, 413 U.S. 405 (1973)	20
Northern States Power Co. v. Minnesota, 447 F.2d 1143 (8th Cir. 1971), *sum. aff'd* 405 U.S. 1035	2, 5, 6, 7, 17
People of the State of Illinois v. Kerr-McGee Chemical Corp., 677 F.2d 571 (7th Cir. 1982)	18
Public Service Co. of New Hampshire, Seabrook Units 1 and 2, NRC Docket Nos. 50-443, 444	3
Public Service Co. of New Hampshire, NHPUC Docket No. DF-82-41	4
Public Service Co. of New Hampshire, Appeal of (Public Utilities Commission, DF-82-141), New Hampshire Supreme Court Docket No. 82-366	4

State Public Utilities Commission v. Springfield Gas & Electric Co., 191 Ill. 209, 125 N.E. 891 (1920) 9
Union Electric Co. v. Illinois Commerce Commission, 77 Ill. 364, 396 N.E.2d 510 (1979) 9

STATUTES

Atomic Energy Act
42 U.S.C. §§2011 *et seq.* 1
42 U.S.C. §2012(g) 16
42 U.S.C. §2013(a) 16
42 U.S.C. §2021(k) 16
42 U.S.C. §2053 16
42 U.S.C. §2061 16
42 U.S.C. §2073 16
42 U.S.C. §2209 16
Biomass Energy and Alcohol Fuels Act of 1980
42 U.S.C. §§8801 *et seq.* 15
Clean Air Act Amendments of 1977
42 U.S.C. §§7401 *et seq.* 18
Clean Water Act
33 U.S.C. §1342 2
Department of Energy Organization Act
42 U.S.C. §7112(5) 16
42 U.S.C. §7113(a)(2) 16
42 U.S.C. §7133(a)(8) 16
Energy Security Act of 1980
50 U.S.C. Appx. §2095 15
Geothermal Energy Act of 1980
30 U.S.C. §§1501 *et seq.* 15
Price-Anderson Act
42 U.S.C. §2210 16
Renewable Energy Resources Act of 1980
42 U.S.C. §§7371 *et seq.* 15

Synthetic Fuels Corporation Act of 1980
42 U.S.C. §§8701 *et seq.* 15
Uranium Mill Tailings Radiation Control Act
42 U.S.C. §2021(o) 18
Wind Energy Systems Act of 1980
42 U.S.C. §§9201 *et seq.* 15
Illinois Environmental Protection Act
Ill.Rev.Stat. ch. 111½, §1039(b) 2
Illinois Public Utilities Act
Ill.Rev.Stat. ch. 111⅔, §32 8
New Hampshire Electric Power Plant Siting Act
N.H.Rev.Stat.Ann. §162-F 3
N.H.Rev.Stat.Ann. §162-F:8 3
New Hampshire Public Utilities Act
N.H.Rev.Stat.Ann. §§362 *et seq.* 3
N.H.Rev.Stat.Ann. §369:1 4

No. 81-1945

IN THE

Supreme Court of the United States

OCTOBER TERM 1982

PACIFIC GAS & ELECTRIC COMPANY, et al.,
Petitioners,

v.

STATE ENERGY RESOURCES CONSERVATION AND DEVELOPMENT COMMISSION, et al.,
Respondents.

BRIEF FOR THE STATES OF ILLINOIS AND NEW HAMPSHIRE AS AMICI CURIAE SUPPORTING AFFIRMANCE

STATEMENT OF INTEREST OF THE STATE OF ILLINOIS

The State of Illinois has a significant interest in the outcome of this litigation and in the Court's determination of the preemptive scope of the Atomic Energy Act, 42 U.S.C. §§2011 *et seq.* ("AEA"). Illinois is more heavily committed to nuclear power than any State in the nation. There are presently six operating nuclear power reactors in Illinois and one which is indefinitely shut down, as well as seven more under construction and two being

planned. The City of Chicago now depends on nuclear generation for at least 45% of its electricity. Illinois also has a low-level radioactive waste burial ground, the nation's only commercial "away-from-reactor" spent fuel storage facility, and a uranium hexafluoride plant, all subject to Nuclear Regulatory Commission ("NRC") licensing and regulation under the AEA.

As described in detail below, electric utility regulation requires examination of the economics of nuclear power generation, and the economics depends in large part on matters of plant safety and operation which are subject to NRC regulation. A reversal of the Ninth Circuit's decision on the preemption question would cast doubt upon the legitimacy of Illinois' manner of regulating electric utilities.

Illinois also regulates the construction and operation of NRC-licensed facilities in order to protect against environmental hazards other than radiation hazards. An example is the regulation, under the Federal Clean Water Act's National Pollutant Discharge Elimination System, 33 U.S.C. §1342, as implemented by Ill.Rev.Stat. ch. 111½, §1039(b), of heat, pH, and fluorides and other nonradioactive chemicals in effluents from Illinois' nuclear reactors. If the Court were to expand the preemptive reach of the AEA beyond the regulation of radiation hazards (*Northern States Power Co. v. Minnesota*, *infra*), the legitimacy of this type of state environmental regulation would also be cast into doubt.

For these reasons, the State of Illinois, joined by the State of New Hampshire, submits this amicus brief in support of the decision below.

STATEMENT OF INTEREST OF THE STATE OF NEW HAMPSHIRE

The State of New Hampshire has a significant interest in the outcome of this litigation and in the Court's determination of the preemptive scope of the Atomic Energy Act, 42 U.S.C. §§2011 *et seq.* Within New Hampshire there are two nuclear power reactors under construction for which an operating license is currently being sought from the NRC. *Public Service Co. of New Hampshire, Seabrook Units 1 and 2*, NRC Docket Nos. 50-443, 444. New Hampshire also has a nuclear reactor located on its western border (Vermont Yankee Nuclear Power Station, Windham County, Vermont) and another plant located in close proximity to its southern border (Yankee Rowe Nuclear Power Station, Franklin County, Massachusetts).

New Hampshire, like most other states, regulates the siting and construction of electric generation facilities and requires a Certificate of Site and Facility prior to the beginning of site preparation work and construction. N.H.Rev.Stat.Ann. §162-F (Supp. 1981). This statute establishes a site evaluation committee, composed of thirteen state officials, which acts in concert with the New Hampshire Public Utilities Commission ("NHPUC") for an integrated review of all relevant aspects of siting and construction. The NHPUC, under both N.H.Rev.Stat. Ann. §162-F and the NHPUC's authorizing legislation, N.H.Rev.Stat.Ann. §§362 *et seq.*, must determine that a proposed generating facility complies with certain environmental standards, meets present and future demands for electrical power, and will not adversely affect systems stability, reliability, and economic factors. N.H. Rev.Stat.Ann. §162-F:8 (Supp. 1981). The NHPUC has

recently asserted its authority under state statute (N.H. Rev.Stat.Ann. §369:1) to determine whether public utility financing of certain nuclear generating capacity is in the public interest. *Public Service Co. of New Hampshire*, NHPUC Docket No. DF-82-141, Report and Order No. 15,760 (July 16, 1982). The NHPUC Order in this matter, prohibiting the Public Service Company of New Hampshire, Inc. from using the proceeds of future financing for the construction of Seabrook Unit 2 unless certain conditions are met, has been appealed to the New Hampshire Supreme Court by the utility. *Appeal of Public Service Co. of New Hampshire* (Public Utilities Commission DF-82-141), New Hampshire Supreme Court Docket No. 82-366.

In summary, a decision from this Court could severely affect the power of the New Hampshire Site Evaluation Committee and the NHPUC to perform their statutory duties to plan for New Hampshire's future energy needs. For these reasons, the State of New Hampshire has joined this amicus brief in support of the decision below.*

---

* Although a portion of this brief (Section I.B) discusses only Illinois' and not New Hampshire's public utility regulatory activities, the arguments made are equally applicable to New Hampshire.

SUMMARY OF ARGUMENT

The purpose of this amicus brief is to address some points not covered, or not covered in great detail, by Respondents and to bring to the Court's attention the consequences of its decision in this case for utility regulation in other States. Amici discuss, first, whether California's so-called moratorium statute is the type of state action proscribed by *Northern States Power Co. v. Minnesota, infra.* In this regard, amici describe the regulatory activities of the Illinois Commerce Commission and demonstrate that matters relating to the construction and operation of nuclear power plants are necessarily addressed by that body in pursuance of its duty to regulate and fix rates for electric power generation in Illinois. The second issue discussed in this brief is federal promotion of atomic energy and the significance of such promotion for state utility regulation. Amici argue that federal promotion takes the sole form of providing financial incentives to the industry and does not limit state action of the kind taken by California.

ARGUMENT

I.

CALIFORNIA'S MORATORIUM STATUTE IS NOT A REGULATION OF RADIATION HAZARDS.

A. *Northern States Power Co. v. Minnesota* Does Not Control This Case.

In 1972 this Court summarily affirmed the decision of the Eighth Circuit in *Northern States Power Co. v. Minnesota*, 447 F.2d 1143 (8th Cir. 1971), *sum. aff'd* 405 U.S. 1035. There the State of Minnesota, in a permit issued to a utility company for a nuclear power plant, established more stringent radioactive effluent limitations than those imposed by the Atomic Energy Commission (the NRC's predecessor agency) pursuant to its powers under the AEA. The Eighth Circuit held that the AEA preempted state regulation of the radiation hazards of nuclear power plants and therefore barred the Minnesota effluent limitations at issue.

For purposes of this brief, amici do not dispute the vitality of *Northern States Power* but argue that even in light of that decision the California moratorium statute is a legitimate exercise of state power. This is because the moratorium statute does not, directly or indirectly, regulate the radiation hazards of nuclear power plants or other NRC-licensed facilities. In *Northern States Power* Minnesota attempted to exercise control over the day-to-day emissions of an existing nuclear power plant. California is not attempting to do anything like that. California is not dictating the manner or place in which nuclear waste shall be disposed, nor is California interfering in any way with federal research and responsibilities in connection with the development of a technology for disposal. Furthermore, in *Northern States*

Power the purpose of the exercise of state power was to control radiation hazards associated with the plant. The purpose of California's action, on the other hand, is to address the economic uncertainties and reliability risks surrounding nuclear generation of electricity. Thus, in arguing that the moratorium statute is preempted, the Petitioners are asking this Court to extend the preemptive reach of the AEA far beyond that articulated in *Northern States Power.*

In its amicus brief supporting a grant of certiorari, the United States argues (page 15) that the moratorium statute is invalid because it "proceed[s] from a judgment that conflicts with a determination already made by the NRC about the likelihood and prevention of radiation hazards." See also the United States' amicus brief on the merits (page 28): "In the second place, Congress did not only permit the NRC to make judgments about the likelihood of radiation hazards, it gave it exclusive authority to do so. . . . In deciding not to permit new construction of nuclear power plants, California has made precisely such a judgment." By using the term "make judgments" rather than "regulate" to describe the NRC's exclusive powers, the United States confuses the issue. Precisely put, the California moratorium proceeds from a legislative decision that California consumers should not take the economic and reliability risks of a clog in the fuel cycle, notwithstanding the NRC's optimism that a disposal technology will have been developed by the time it is needed. While the AEA, as interpreted in *Northern States Power,* may preclude States from determining the manner in which nuclear waste shall be disposed, nothing in that statute precludes them from doubting the NRC's assurances that the technology will be available when needed. One can accept the contention that such a state "judgment" is preempted only if it is correct that Congress has

mandated the use of nuclear power over the objections of a State—a view shown by Respondents and other amici to be erroneous.*

B. State Electric Utility Regulation Requires Consideration Of The Economics Of Nuclear Construction And Operation.

Insofar as the moratorium statute is a "judgment" about radiation matters, it is not significantly different from the judgments ordinarily made by state utility regulators. In regulating the production and pricing of electricity States must consider a wide range of issues, many of which the NRC also considers for different purposes pursuant to its own duties under federal law. In Illinois and other States issues relating to the construction and operation of nuclear power plants are intimately bound up with the economic considerations basic to the provision of electricity.

The Illinois Commerce Commission ("ICC") is required to establish electric rates which are "just and reasonable". Ill.Rev.Stat. ch. 111⅔, §32. In *Cerro Copper Products v. Illinois Commerce Commission*, 83 Ill.2d 364, 415 N.E.2d 345 (1980), the Illinois Supreme Court ruled that in setting fair and reasonable electric rates the ICC must consider many complex factors, including the fair value of the utility's property, the existing capital-formation structure, the proposed financing for any construction program, original cost rate base, operating expenses, revenue and income, and the cost of providing service to the various customer classes. 83 Ill.2d 364 at 371-72. In order to ascertain just one of these factors, the fair value of property, the ICC must examine every relevant factor, including the original cost of construction,

* See also Section II of this brief, below.

the present cost of construction, the amount expended in permanent improvements, the probable earning capacity of the property under the particular rates prescribed by statute, and the sum required to meet operating expenses. *Union Electric Co. v. Illinois Commerce Commission*, 77 Ill.2d 364, 369-70, 396 N.E.2d 510 (1979). The consideration of each of these and similar factors in the determination of reasonable rates is a matter of "sound business judgment" which the legislature has delegated to the expert judgment of the ICC. *Cerro Copper, supra*, 83 Ill.2d 364 at 371; *State Public Utilities Commission v. Springfield Gas & Elec. Co.*, 191 Ill. 209, 125 N.E. 891 (1920).

In considering all economic factors relevant to determining a reasonable rate, the ICC necessarily examines and evaluates the economic consequences of matters which for radiological health and safety purposes are subject to NRC regulation. For example, in *Commonwealth Edison Co.*, ICC Docket No. 78-0045, Order dated December 13, 1978 (a copy of the relevant pages of this Order and of those cited below are included in the Appendix to this brief), the ICC rejected Edison's proposal to raise for ratemaking purposes the expense allowance for future disposal of spent nuclear fuel from one-half to one mill per kilowatthour. A-2. In a subsequent rate proceeding the ICC reconsidered the allowance for spent fuel disposal and granted Edison's proposed 100 percent increase based on a new U.S. Department of Energy estimate of spent fuel disposal costs. *Commonwealth Edison Co.*, ICC Docket No. 79-0214 (Order dated February 6, 1980). A-4. In a subsequent rate proceeding Edison proposed yet again to double its allowance for spent fuel disposal, based on yet a further Department of Energy estimate, and the ICC again granted the request. *Commonwealth Edison Co.*, ICC Docket No. 80-0546, Order

dated July 1, 1981. A-9. Edison's petitions for higher expense allowances for future disposal costs have resulted in significantly higher consumer rates.

In the 1979 rate proceeding (Docket No. 79-0214, *supra*) the ICC also analyzed Edison's depreciation rate for its nuclear plants, which includes allowances for chemical cleaning (i.e., plant decontamination due to radiation buildup) and end-of-life decommissioning expenses. A-5, 6. Testimony from ICC staff highlighted the uncertainty surrounding the technology and costs for future chemical cleaning and decommissioning, and pointed out that fear exists about whether utilities will abandon their responsibility for safely disposing of nuclear plants. In response to this fear the ICC ordered Edison to establish accounting procedures for amounts collected from rates in anticipation of these future expenses in order to provide for the event that Edison "is no longer in a position to care for the plants and the spent fuel." A-6.

That issues relating to construction and operation of nuclear power plants are relevant to ratemaking is also illustrated by Edison's most recent rate request pending before the ICC, Docket No. 82-0026. A major issue in this proceeding is Edison's nuclear construction program, the most ambitious in the nation. The position of the People of the State of Illinois and a number of other parties is that the nuclear construction program is the cause of Edison's present precarious financial condition and has caused, and will continue to cause, rapidly increasing electric rates in northern Illinois.

That position is supported by the Testimony of Dale G. Bridenbaugh filed in the pending rate proceeding. (A copy of this testimony is included in the Appendix to this brief.) Mr. Bridenbaugh addressed the growing costs and

technical uncertainties of nuclear power.* In specific, he discussed seven issues of nuclear technology and plant safety that could significantly affect the performance and expected operating lifetimes of Edison nuclear units. The seven issues are: 1) changing NRC regulatory requirements for existing plants, 2) steam generator performance, 3) failure of primary system components not intended to be replaced during the life of the plant, 4) Three Mile Island ("TMI") accident-generated regulatory changes, 5) radiation level buildups, 6) future requirements to mitigate or prevent nuclear accidents, and 7) failure or degradation of nonsafety-related equipment.

With respect to the changing regulatory requirements for existing plants, the witness described a number of extensive plant modifications which have been or may soon be imposed by NRC. "These required changes will likely result in significant outage time and hardware costs at each of the affected plants." A-13. Br. Bridenbaugh noted that changing regulatory requirements have forced Dresden Unit 1, an Edison plant, into de facto retirement. A-15.

Steam generators represent a potential for long-term shutdowns due to the need for repair or replacement. The witness observed that Edison's Zion plant is a likely candidate for steam generator repair, and that two Edison plants now under construction may also experience steam generator problems. A-16, 17.

---

* The State stresses that Mr. Bridenbaugh's testimony is discussed here not for the purpose of persuading the Court or parties that his views are correct, or that nuclear energy is unduly expensive, but simply to demonstrate that nuclear safety matters are, because of their economic ramifications, considered by the ICC in connection with its function of setting rates for electricity.

Primary system failures, such as cracking of piping systems and pressurized thermal shock ("PTS") in containment vessels, also represent a significant factor in assessing expected plant life. Mr. Bridenbaugh noted that such problems are relevant to Illinois plants, and the PTS represents a real risk to the future of Zion Units 1 and 2 and Dresden Units 1 and 2. A-18, 19.

TMI-generated modifications have already been made by Edison and more will be made. According to the witness, such modifications should cost Edison between $25 million and $100 million per unit. A-20.

Decontamination of Edison plants due to radiation level buildups will cost $47.2 million for Dresden Unit 1 (the unit which was prematurely shut down in 1978), between $16 million and $23 million for each of the other two Dresden units, and between $18 million and $25 million for a Zion unit. A-21.

The witness concluded that these seven plant life issues could shorten the effective operating life of a nuclear unit by an average of three to eight years and could cost Edison approximately $100 million to $1 billion per unit. A-22. He went on to suggest some methods by which Edison and the ICC might address these expected expenses: 1) consider such expenses in choosing between alternate types of generation; 2) acknowledge the shorter life expectancy of nuclear power plants by increasing the annual depreciation rate, or 3) establish a "sinking fund" to gradually accumulate sufficient funds in preparation for future capital expenditures and associated outages (purchase of replacement power).

Mr. Bridenbaugh's first suggestion points to an additional way in which the ICC can consider the economics of nuclear safety issues. The Illinois Public Utilities Act requires that utilities seeking to build generating plants

must obtain a certificate of convenience and necessity from the ICC, and the ICC has power to issue a certificate only upon a showing that the proposed facility is necessary for public convenience. Ill.Rev.Stat. ch. 111⅔, §56. Under this statutory provision the ICC has the authority to deny a certificate for a proposed nuclear power plant if it is found to be less economical than some alternative source of energy, or if the uncertainty concerning future costs is so great as to outweigh prospective benefits.

Thus, the present and future costs of construction, spent fuel disposal, decommissioning, chemical cleaning, backfitting or other costly plant modifications, and of increased depreciation or purchased (replacement) power due to outages or shortened operating life must all be considered by the ICC in setting rates and certifying construction proposals.* Furthermore, it is apparent that the costs of construction and operation are becoming the determinative factor in evaluating the desirability and viability of nuclear power—largely because some of the necessary technologies, and thus the magnitude of particular expected future expenditures, have not been demonstrated. The ICC has a variety of approaches available to address these uncertain future costs, including mandatory special accounting techniques, denial of those portions of rate requests attributable to doubtful cost estimates, and denial of certificates of convenience and necessity for nuclear construction proposals until such time as the technological and cost uncertainties are resolved. All of these techniques can be said to dis-

* At page 24 of its amicus brief on the merits, the United States virtually concedes this point: "That is not to say that the state may not protect its citizens against exorbitant utility costs . . . ."

courage the use of nuclear generation by a utility. The last of them is identical to California's approach except in form; for it too prohibits the construction of further nuclear power plants until the necessary technologies, and therefore the economic viability, of nuclear generation can be demonstrated.

If California's legislation addressed to a particular economic uncertainty is an impermissible "judgment" about nuclear safety matters, so is Illinois' method of utility regulation. Indeed, were the ICC barred from considering such matters it could not fulfill its legislative mandate to set reasonable rates and ascertain the necessity and convenience of proposed generating facilities. In other words, if the United States is correct that States may not make judgments about NRC-regulated matters even where such judgments are made for economic rather than for radiological health and safety reasons, the ICC may well be precluded from making reasoned and reasonable determinations about rates and about plant construction, and Illinois' traditional approach to utility regulation will be thrown into disarray.

II.

FEDERAL PROMOTION OF NUCLEAR POWER DOES NOT REQUIRE PREEMPTION OF STATE LAW.

A major contention which has been put forward in support of preemption here is that the AEA reflects a congressional policy of promoting the development and use of atomic energy. Underlying this contention is the unjustified assumption that any state action which can be said to obstruct or interfere with the activity sought to be promoted must be preempted.

Generally speaking, it does not necessarily follow from the fact that Congress is promoting some industry or

activity that Congress intends to oust state jurisdiction with respect to such industry or activity. The federal government promotes many industries without restricting state authority over them. A recent example in the energy area is the production of synthetic fuels; see the Synthetic Fuels Corporation Act of 1980, 42 U.S.C. §§8701 *et seq.*, and the Energy Security Act of 1980, 50 U.S.C. Appx. §2095, programs of massive federal financial assistance to promote development of synthetic fuels in order to reduce dependence on foreign oil and meet national defense needs (42 U.S.C. §8701(a) and 50 U.S.C. Appx. §2095(a), respectively). These statutes do not limit traditional state regulatory powers; indeed, the Synthetic Fuels Corporation Act expressly leaves intact state environmental, land use, and siting laws. 42 U.S.C. §8743. See also the Renewable Energy Resources Act of 1980, 42 U.S.C. §§7371 *et seq.*, Biomass Energy and Alcohol Fuels Act of 1980, 42 U.S.C. §§8801 *et seq.*, Wind Energy Systems Act of 1980, 42 U.S.C. §§9201 *et seq.*, and Geothermal Energy Act of 1980, 30 U.S.C. §§1501 *et seq.*; these enactments also promote the development and use of various energy forms without restricting traditional state powers. Thus, to say, without more, that Congress is promoting an industry indicates nothing about the scope of state authority.

Amici do not dispute that the federal government continues to promote the development and use of atomic energy. One of the stated purposes of the AEA is to "encourage widespread participation in the development and utilization of atomic energy for peaceful purposes. . . ." 42 U.S.C. §2013(d). The relevant question is: *By what means* does the AEA attempt to effectuate this purpose? There are four primary means apparent in that statute and related legislation.

The first is federal funding of research and development; see the AEA, 42 U.S.C. §§2012(g), 2013(a), 2051(a), 2053, and 2209, and the Department of Energy Organization Act, 42 U.S.C. §§7112(5) and 7113(a)(2). the second is a statutory limitation on private liability for damages arising from a nuclear incident; see the Price-Anderson Act, 42 U.S.C. §2210, and the discussion in *Duke Power Co. v. Carolina Environmental Study Group*, 438 U.S. 59 (1978). The third primary method is subsidizing portions of the fuel cycle; see 42 U.S.C. §§2061 and 2073. Congress' fourth and, together with the Price-Anderson provisions, probably most important method of encouraging use of atomic energy is federal assumption of virtually all responsibility for disposing of high-level nuclear wastes; see 42 U.S.C. §7133(a)(8).

These methods of encouraging the development and use of nuclear power are aimed at "stimulating the involvement of private enterprise in the production of electric energy through the use of atomic power." *Duke Power Co., supra*, 438 U.S. at 83. Federal law thus promotes nuclear power in the sense that it tries to create an atmosphere conducive to persuading utilities to take the financial risk of "going nuclear". "Congress' purpose was to remove the economic impediments in order to stimulate the private development of electric energy by nuclear power. . . ." *Id.*, at 84.

Thus, the goal of federal promotional activity, as evidenced by the applicable legislation, is to influence the decisions made by utility executives. There is absolutely nothing in the AEA or its legislative history to suggest, much less clearly indicate, that Congress intends to influence the decisions made by States regarding the desir-

ability, on economic or other grounds, of nuclear power.* In other words, the AEA does not reflect a congressional intent to promote nuclear power by means of eliminating state regulatory power.

Insofar as Petitioners rely on *Northern States Power Co. v. Minnesota, supra,* for their argument that federal promotional objectives preempt California's statute, such reliance is unjustified. In *Northern States Power* the Eighth Circuit determined that state radiation regulations are preempted because, among other things, they hinder the federal objective of promoting nuclear power.** 447 F.2d at 1153-54. First, California's statute is not a radiation regulation and is on that ground distinguishable from the regulation in *Northern States Power.* Second, *Northern States Power* cannot help Petitioners for the more fundamental reason that, even on its terms, its reasoning was untenable. For nothing in the AEA indicates that Congress' promotional policy requires preemption of state radiation regulation. While Congress

---

* The observation has been made many times but bears repeating that federal law does not *require* utilities to use nuclear generation rather than alternative forms. It merely encourages their doing so by manipulating market conditions in the manner described in the text above. If the AEA does not bar the private sector from declining the nuclear option on economic grounds, that statute cannot reasonably be construed to bar States from doing the same.

** In *Northern States Power* the Eighth Circuit articulated four rationales for its determination that the AEA preempts state regulation of radiation hazards: the language of the statute, the legislative history, the nature of the subject matter, and the statute's promotional objectives. Since this Court affirmed without opinion, it is not apparent which of these rationales, if any, it agreed with. *Mandel v. Bradley,* 432 U.S. 173 (1976). Because Petitioners are urging that federal promotion requires preemption, specific examination of that issue by this Court is appropriate.

may have determined to preempt such regulation, there is no basis in the statute for concluding that Congress determined to do so *because* it is promoting the nuclear industry.* Logic alone should have dictated that promotion could not be the reason for the AEA's apparent preemption of radiation regulation. For if Congress had wanted to eliminate state action which might discourage development of atomic energy, it would have done so thoroughly, not by preempting only the regulation of radiation hazards. There has never been dispute that the statute leaves unfettered state authority to regulate for general environmental or land use purposes. 42 U.S.C. §2021(k); *New Hampshire v. Atomic Energy Commission*, 406 F.2d 170 (1st Cir. 1969), *cert. den.* 395 U.S. 962; *People of the State of Illinois v. Kerr-McGee Chemical Corp.*, 677 F.2d 571 (7th Cir. 1982); *In the Matter of Consolidated Edison Co.*, 7 NRC 31 (1978). If a State may regulate construction and operation of a nuclear power plant to prevent thermal water pollution or to accomplish local land use goals, that interferes with the development and use of atomic energy at least as much as stringent state radi-

* The 1977 Clean Air Act Amendments, 42 U.S.C. §§7401 *et seq.*, which lifted the AEA's preemption of radiation regulation with respect to air pollution, strike at the heart of the Eighth Circuit's view that promotion must mean preemption of state radiation regulation. See the discussion of these Amendments in the State of New York's amicus brief. Congress has now authorized States to subject NRC-licensed facilities to even draconian air radiation standards while continuing to promote the industry in the manner described in the text above. Congress thus apparently sees no conflict between its promotional policies and state regulation of radiation hazards. See also the Uranium Mill Tailings Radiation Control Act of 1978, which permits Agreement States to regulate the radiation hazards of mill tailings more stringently than the NRC does. 42 U.S.C. §2021(o). Like the Clean Air Act Amendments, the Mill Tailings Act belies the Eight Circuit's view that federal promotional policy requires preemption of state radiation regulation.

ation limitations. From the perspective of federal promotional policy, it matters little whether state interference is on radiological or other environmental grounds, since the result is the same: utilities may be discouraged from building nuclear power plants. The only conclusion which can reasonably be drawn is that Congress, whatever other reasons it had for preempting state radiation regulation, did not preempt such regulation in order to implement a promotional policy, and that the Eighth Circuit's reasoning on this issue was wrong.*

In sum, federal promotional policy does not bar the independent state consideration of nuclear economics which California's statute represents. Given that Congress promotes many activities without restricting state authority over them, that Congress promotes atomic energy itself without restricting state authority over numerous matters, including most environmental hazards, and, finally, that the AEA and related legislation do not indicate a congressional intention to promote atomic energy other than by stimulating private involvement in the industry, it would be improper—indeed, irrational—to assume that state action like California's is preempted. As the Court has stated:

> This Court has repeatedly refused to void state statutory programs, absent congressional intent to preempt them.

---

* The United States appears to concede that States may regulate for economic purposes and completely reject nuclear energy as being less cost-effective than other forms of generation. U.S. amicus brief, p. 22, n.23. If States may do so, then there is no rational basis for finding that California's *conditional* rejection of nuclear energy (i.e., rejection pending resolution of the disposal problem) is objectionable. For nothing could interfere more with Congress' promotional intentions than a complete state ban—on whatever grounds.

> "If Congress is authorized to act in a field, it should manifest its intention clearly. It will not be presumed that a federal statute was intended to supersede the exercise of the power of the state unless there is a clear manifestation of intention to do so. The exercise of federal supremacy is not lightly to be presumed." *Schwartz v. Texas*, 344 U.S. 199, 202-203, 97 L.Ed. 231, 73 S.Ct. 323 (1952).

New York State Dept. of Social Services v. Dublino, 413 U.S. 405, 413-14 (1973).

CONCLUSION

For these reasons, as well as for the reasons set forth in Respondents' brief, amici request this Court to affirm the decision below.

Respectfully submitted,

TYRONE C. FAHNER
Attorney General
State of Illinois

JOHN VAN VRANKEN*
ANNE RAPKIN
JEFFREY C. PAULSON
Assistant Attorneys General
Environmental Control Division
188 West Randolph Street
Suite 2315
Chicago, Illinois 60601
(312) 793-2491

GREGORY H. SMITH
Attorney General
State of New Hampshire

E. TUPPER KINDER
Assistant Attorney General
Environmental Protection Division
Office of the Attorney General
State House Annex
Concord, New Hampshire 03301
(603) 271-3678

* *Counsel of Record*

APPENDIX

TABLE OF CONTENTS

	Page
Commonwealth Edison Co., I.C.C. Docket No. 78-0045, Order dated December 13, 1978, pages 1, 8	A-1
Commonwealth Edison Co., I.C.C. Docket No. 79-0214, Order dated February 6, 1980, pages 1, 18, 19	A-3
Commonwealth Edison Co., I.C.C. Docket No. 80-0546, Order dated July 1, 1981, pages 1, 9, 10	A-7
Commonwealth Edison Co., I.C.C. Docket No. 82-0026, Attorney General's Exhibit 16, Testimony of Dale G. Bridenbaugh, pages 1-16 (*schedules omitted*)	A-10

[1]

STATE OF ILLINOIS
ILLINOIS COMMERCE COMMISSION

COMMONWEALTH EDISON COMPANY Application for a proposed general rate increase in electric rates stated in 11th Revised Sheet No. 35 of Ill. C.C. No. 3, Schedule E-3, Amendment to Sections 8.01, 8.02 and 8.03 of Electric Service Agreement between Commonwealth Edison Company and Chicago Transit Authority dated as of August 1, 1958, as amended, Amendment to Section 6 of Street Lighting Electric Service Agreement between Commonwealth Edison Company and City of Chicago dated as of February 20, 1950, as amended (Changes effective June 20, 1978, pursuant to Section 12 of said Agreement), Amendment to Section 8 of Electric Service Agreement between Commonwealth Edison Company and Chicago Park District dated as of February 28, 1951, as amended, and Amendment to Sections 7.01, 7.02 and 7.03 of Electric Service Agreement between Commonwealth Edison Company and the Illinois Central Gulf Railroad Company dated as of June 1, 1974, as amended, hereinafter referred to as "Filed Rate Schedule Sheets" in which it proposes a general increase in electric rates in its urban and rural service areas, effective February 20, 1978, except as otherwise noted.	78-0045

ORDER

[Dated December 13, 1978]

By the Commission:

HISTORY OF THE PROCEEDING

On January 20, 1978, Commonwealth Edison Company ("Edison", "Company", or "Respondent") filed changes in tariffs with this Commission, in which it proposed: a general increase in the Company's Illinois electric rates; and amendments to certain electric service agreements between Edison and the Chicago Transit Authority, the City of Chicago, the Chicago Park District, and the Illinois Central Gulf Railroad Company.

. . .

[8]

. . .

An examination of "Preliminary Estimates of the Charge for Spent-Fuel Storage and Disposal Services" issued by the U.S. Department of Energy in July, 1978, a report Edison uses to develop its provision for costs for disposition of spent nuclear fuel, indicates the report does not establish new policy and that assumptions in the report are consistent with those announced in its October, 1977, policy statement. In light of the report, for purposes of this test year, the additional one-half mill per kilowatthour for the last four months of 1978 should not be allowed as a fuel expense and the Unamortized Cost of Nuclear Fuel in Reactors and Held for Reprocessing should be adjusted to reflect this disallowance.

. . .

[1]

STATE OF ILLINOIS
ILLINOIS COMMERCE COMMISSION

COMMONWEALTH EDISON COMPANY Proposed general increase in electric rates.	79-0214

ORDER

[Dated February 6, 1980]

By the Commission:

On April 6, 1979, Commonwealth Edison Company ("Respondent", "Company", or "Edison") filed with the Illinois Commerce Commission ("Commission") certain revised tariff schedules and amendments identified as Ill.C. C. No. 4, 1st Revised Sheet Nos. 10, 12, 14, 16, 18, 20, 22, 23, 24, 26, 28, 29, 30, 32, 33, 38, 39, 40, 42, 43, 44, 49, 55, 64, 65, 74, 75, 77, 79, 84, 88, 89, 90 and 91, 2nd Revised Sheet Nos. 9, 25, 34 and 36, Amendments to Sections 8.01, 8.02 and 8.03 of Electric Service Agreement between Commonwealth Edison Company and Chicago Transit Authority dated as of August 1, 1958, as amended, and Amendments to Sections 7.01, 7.02, 7.03 and 10.02 of Electric Service Agreement between Commonwealth Edison Company and the Illinois Central Gulf Railroad Company dated as of June 1, 1974, by which it proposed an increase in electric rates and amendments to certain electric service agreements to become effective May 7, 1979. On April 6, 1979, the Company also filed a Petition for Interim Rate Increase.

. . .

[18]

. . .

Other Expenses

The Company's expenses include amounts for disposal of spent nuclear fuel discharged from its nuclear plants recovered through fuel expense and amounts for interim chemical cleaning and end-of-life decommissioning recovered through depreciation expense. The Internal Revenue Service does not recognize these collections as for current expenses so the amounts collected are not deductible for income tax purposes. The Company is treating the tax effect as a negative deferred income tax thereby reducing accumulated deferred income taxes and increasing rate base.*

As of September, 1978, Edison increased the amount it was collecting for spent fuel disposal costs from ½ mill per kilowatthour to 1 mill per kilowatthour although such increase was disallowed for ratemaking purposes in Docket 78-0045. A nuclear engineer for Respondent testified in support of the 1 mill provision.

In October 1977, the U.S. Government committed itself to providing permanent disposal of spent fuel for a one-time charge. Although the U.S. Government has not yet taken charge of permanently disposing of civilian spent fuel, the U.S. Department of Energy (DOE) has issued preliminary estimates of the cost of such disposal. Respondent bases the 1 mill provision on DOE's most recent publication issued July 1978, DOE/ET-0055, *Preliminary Estimates of the Charge for Spent Fuel Storage and Disposal Services.*

Staff does not propose any adjustment to the 1 mill provision. A member of the Accounts and Finance Staff testified that there are many uncertainties surrounding the back-end of the fuel cycle. The witness recommends that the provision for disposal costs be periodically re-examined. The Accounting Staff further recommends

---

* Respondent's Comptroller presented a memorandum with an example to demonstrate the effect of the tax treatment and book treatment of this expense.

that the Company consider not making further changes in its recording of the amortization for disposal of spent fuel without prior Commission concurrence.

A member of the Electrical Engineering Staff reviewed the method being used by the Company to depreciate its nuclear plants examining particularly the manner in which the Company is collecting, and the amounts being collected, for end-of-life decommissioning of these plants.

Edison calculates the depreciation rate for large nuclear plants using the remaining life method based on a 35-year plant life. The method includes allowances for future chemical cleaning and decommissioning and known budgeted additions for the next 5 years, with their costs in 1980 dollars. It is the witness'

[19]

testimony that the various items used by Edison are reasonable. The witness testified that there is great uncertainty regarding the technology for chemical cleaning and regarding the economic useful life of a large nuclear unit which is effected by the success or failure of chemical cleaning.

The Engineering Staff witness agrees with the Company's current collection of future projected decommissioning cost, chemical cleaning and other expenses on the grounds that it maintains intergenerational equity among users who benefit currently from use of the plants. He pointed out that there are other methods one can use for providing for such costs such as expensing the entire amount when it occurs, or setting up a trust fund for such expenses.

The Electrical Engineering Staff witness further testified that there exists a fear that utilities will abandon their responsibility for safely disposing of nuclear plants. In view of this concern, the witness suggests that a separate account be considered for accruing depreciation collections for future decommissioning costs. The point of such treatment would be that, for example, in case of dissolution of the Company, there would be an account that would represent the amount ratepayers have contributed for this purpose.

Until there is more experience with disposal of spent fuel, interim chemical cleaning and decommissioning of nuclear plants and other matters related to nuclear plants, the Commission believes the Company should continue current methods for collecting for these items. As more information becomes available, the methods and provision for these expenses should be regularly reevaluated. The Commission believes Staff's recommendation for a special method of accounting for amounts collected from ratepayers for these future expenses should be adopted. Respondent should set up an accounting procedure, in consultation with Staff, to record the amounts contributed by ratepayers for decommissioning and interim chemical cleaning of nuclear plants and for disposal of spent fuel, and submit it for Commission approval. The purpose of the procedure is to make clear the claim of ratepayers to the amounts recorded from the Company's assets, at a minimum, for these long-term expenses associated with nuclear plants, in the event Respondent is no longer in a position to care for the plants and the spent fuel.

. . .

---

[1]

STATE OF ILLINOIS
ILLINOIS COMMERCE COMMISSION

COMMONWEALTH EDISON COMPANY Proposed general increase in electric rates.	80-0546

ORDER

[Dated July 1, 1981]

By the Commission:

On August 8, 1980, Commonwealth Edison Company ("Respondent", "Edison", or "Company") filed with the Illinois Commerce Commission ("Commission") certain revised tariff schedules and amendments . . .) by which it proposed an increase in electric rates and amendments to certain electric service agreements to become effective September 8, 1980. Concurrent with the filing of said tariffs and amendments, Edison also filed its Petition for Interim Rate Increase whereby it requested that approximately half of the proposed permanent increase be allowed to go into effect, subject to refund, pending the Commission's final order in this case.

. . .

[9]

. . .

Unamortized Cost of Nuclear Fuel in Reactor and Held for Reprocessing

In its order in Docket 79-0214, the Commission directed

[10]

Edison to establish an account to record the amount contributed by ratepayers for disposal of spent fuel. Since

February, 1980, the Company's rates have been based on costs which include a provision of one mill per kwh of nuclear generation for the disposal of spent nuclear fuel. Edison is proposing that its provision for spent fuel disposal be increased from one mill to two mills per kwh. The two mill cost is broken down into two components: one and one-half mills to cover the recently updated cost of disposal charges and one-half mill to cover the deficit that currently exists for fuel that was exposed and burned prior to June 30, 1981. The witness calculated that this net deficit, without LaSalle Unit 1, amounts to $295,500,000.

Edison's Director of Economic Research testified that the estimated cost of $347/kg was used to determine the Company's proposed increase of one mill in the reserve for disposal of spent nuclear fuel. The witness cited the most recent publication of the Department of Energy ("DOE") issued in October, 1980, DOE/SR-0006, Department of Energy Report on Fee for Spent Nuclear Fuel Storage and Disposal Services, which has now increased its estimated disposal cost only to $334/kg. Edison applied a 7½% escalation factor to the 1980 price, arriving at $339/kg. The witness explained that the government's new figures confirm the Company's estimate of $347/kg; he also stated that the DOE cost estimates are based on a permanent repository fuel acceptance date of 1997, as compared with 1988 in their July, 1978 study. If Edison cannot provide interim storage up to 1997, the witness said that considerable additional costs will be incurred. Edison expects to have adequate storage facilities so that there would be no need to shift fuel prior to 1990. While the Company is presently providing on-site storage, the witness indicated that the proposed increase is to cover the costs of permanent disposal of spent fuel only and that there is no proposal in this case to recover the cost of interim storage. Edison's witness also stated that the disposal charges collected through the current rates may not have to be paid to DOE for an indefinite period, although he also stated that DOE may require some prepayment provision in the contracts between the utilities and DOE.

The Commission is of the opinion that Edison's provision for spent nuclear fuel should be increased from one to two mills per kwh of nuclear generation. Although one half of the increase is to cover costs of fuel used prior to June 30, 1981, the provision for these costs is intended to associate the disposal costs of the fuel with the same customer who purchased the energy generated by the fuel. The actual disposal and associated cost will occur in the future. The present allowance is not sufficient to cover the estimated costs of disposal. To permit the existing deficit to increase would be unfair to future ratepayers.

Also in accordance with the Commission's direction in Docket 79-0214, Respondent is currently submitting to the Commission, a specific accounting to show the amounts being collected for the interim chemical cleaning and end-of-life decommissioning of its nuclear plants. Respondent should continue this procedure.

. . .

STATE OF ILLINOIS
ILLINOIS COMMERCE COMMISSION

COMMONWEALTH EDISON,	)	
	)	ICC Docket
	)	No. 82-0026
Proposed general increase in electric rates	)	

AG EXHIBIT 16

TESTIMONY OF Dale G. Bridenbaugh
ON BEHALF OF THE
PEOPLE OF THE STATE OF ILLINOIS

[1]

EXPECTED LIFETIME & PERFORMANCE OF NUCLEAR POWER PLANTS

Identification and Qualifications

My name is Dale G. Bridenbaugh. I am President of MHB Technical Associates, 1723 Hamilton Avenue, Suite K, San Jose, California 95125 and also serve as a principal consultant in the firm's consulting business.

I have previously submitted testimony in the interim phase of this case. Further details of my experience and qualifications are contained in that testimony which is identified as AG Exhibit 6 ("AG-6").

Purpose of Testimony

The purpose of my interim testimony, AG-6, was to present the results of a review I had performed of Commonwealth Edison Company ("CECO") testimony and data request responses with regard to the expected lifetimes of nuclear units on the CECO system and related issues. This review of information relevant to

CECO's general rate increase request was performed at the request of the Illinois Attorney General's Office, as was my development of testimony for the interim and final phases of this case. The purpose of this testimony is to update my interim testimony. This is possible due to both the passage of time which permitted the acquisition of additional data, and due to the receipt of a substantial amount of information from

[2]

CECO in response to Attorney General Data Requests ("DR") subsequent to the interim hearings.

In general, this additional information has not substantively changed the results of my review as presented in AG-6. Accordingly, I hereby incorporate that previous testimony into this final testimony, as modified and expanded in the following paragraphs. The primary conclusions of AG-6 were summarized in several tables, and I have, for convenience, appended those tables, as *Schedule 1* to this testimony.

Issues Pertinent to CECO Rate Case

In my previous testimony I identified seven issues or categories of problems that could impact significantly on the performance and/or expected lifetime of CECO nuclear units. These seven issues are:

1. Changing regulatory requirements and the associated licensability of a plant;
2. PWR steam generator performance;
3. Failure of primary system components not intended to be replaced during the life of the plant;
4. TMI accident generated changes;
5. Radiation level buildup;
6. Future requirements that may be imposed to mitigate or prevent nuclear accidents;
7. Serious failure or degradation of nonsafety related components.

The background and outlook for each of these issues was addressed in detail in AG-6. [3] The following section will update the testimony previously filed on each of these issues.

Regulatory Requirements

My previous testimony identified the issue of changing regulatory requirements as one which potentially affects the long term operability of existing and future nuclear units. I used as an example in that discussion the NRC's Systematic Evaluation Program ("SEP"). The SEP review currently under way by the NRC includes a detailed review of the first ten licensed nuclear plants in 137 technical areas. Both Dresden 1 and Dresden 2 of Commonwealth Edison's nuclear units are included in the SEP review, although Dresden 1 has been indefinitely deferred because of the uncertainty surrounding its return to service in the future.

One of the issues alluded to by CECO representatives in cross-examination at the interim hearing was whether or not the SEP review would itself result in specific backfit requirements. At the time of this discussion, it could not be definitely stated that backfitting would result since the first plant review resulting from the SEP program had not yet been completed.

The first SEP review has now been completed and the NRC report issued. The review of that plant (Palisades in Michigan) is documented in an NRC report which was issued in April 1982.[1] A copy of the abstract and summary from that report has been appended to this testimony as *Schedule 2.*

[4]

Of significance is the report's discussion of backfitting requirements. Summarizing the backfitting requirements for Palisades, five topics primarily required

[1] NUREG-0820, Integrated Plant Safety Assessment, Systematic Evaluation Program, Palisades Plant, April 1982.

equipment modification or addition, twelve topics required procedural development or changes, and nine topics primarily required additional engineering analysis or continuation of an ongoing evaluation.[2] The report additionally lists some seventeen safety improvements to be implemented by the licensee as a result of SEP.[3] San Onofre 1, another plant undergoing SEP review, has recently been the subject of consideration of a "Show Cause" Order prohibiting restart of the unit due to seismic design deficiencies.[4] The operating utility has decided to make structural modifications at the plant and an outage for most of 1982 is anticipated.

The importance of these findings in the SEP reviews is not that these same requirements will be found to be necessary at the CECO plants but rather that the SEP review is resulting in the identification of plant modifications that become requirements during or at the completion of the review. These required changes will likely result in significant outage time and hardware costs at each of the affected plants.

The SEP review is certainly not the only active program under way at the NRC which can and does result in the imposition of new regulatory requirements on existing plants. The NRC's Inspection and Enforcement Division ("I&E") has a

[5]

continuing effort under way to evaluate problems that arise at operating plants for potential applicability to other plants on a generic basis. The vehicle by which this I&E program is communicated consists of a series of written advice to the owners and operators of nuclear

---

[2] *Ibid.* 1, pp. xiii & xiv.

[3] *Ibid.* 1, pp. xiv & xv.

[4] May 6, 1982 Memorandum, William T. Russell, NRC to Gus Fainas, NRC, Recommendation for prompt formal NRC action (Order on Order to Show Cause) to require continued shutdown of San Onofre unit 1 pending resolution of seismic design deficiencies.

facilities. These written directives may take three different forms.

> The I&E Bulletin is used to notify licensees of specific actions to be taken. The Bulletin is, in effect, a regulatory requirement and usually requires that the licensee provide a report to the NRC describing the action that they are taking in response to the Bulletin. The Bulletin addresses matters of concern or events related to reactor safety, material safeguards and radiological safety or environmental protection. If a facility licensee refuses to perform an action set forth in a Bulletin, the requirement for the action may be imposed by the issuance of an Order.[5]
>
> I&E Circulars are used to notify licensees of actions which the NRC recommends be taken. I&E Circulars generally communicate matters of lesser significance than those addressed by Bulletins and a written response is usually not required.
>
> In 1979, the NRC began the issuance of Information Notices. It is used by the NRC to rapidly transmit information applicable or potentially applicable to licensees. The information may or may not have been analyzed by the NRC and generally acknowledgment or response is not required.

This communication program is a rapidly growing part of the NRC's regulatory activities. In 1979, the NRC issued 34 Bulletins, 20 Circulars, and 24 Information Notices. 29

[6]

Bulletins, 25 Circulars and 53 Information Notices were issued in 1980.

Each of these Bulletins, Circulars and Information Notices has the potential for a significant impact to be imposed upon the operating plant. The Bulletins are particularly capable of imposing extensive regulatory requirements. Several of the Bulletins issued in 1979 (79-02, 79-07, and 79-14) imposed piping reanalysis re-

---

[5] NUREG-0690, U.S. NRC 1979 Annual Report, p. 159.

quirements on a number of operating nuclear plants. Outages lasting nearly a year were required at some plants (Beaver Valley 1, Surry 1, and Salem 1), and substantial costs were involved in reanalysis and hardware modifications. CECO reports costs of $2.0 million at Zion, $1.5 million at Quad Cities, and $6.8 million at Dresden in 1979 through 1981 in these areas.[6]

There is, of course, no certainty as to whether or not regulatory requirements will be imposed at a greater or lesser rate in the future. Since the nuclear industry is still young and substantial amounts of operating experience are just now being accumulated and evaluated, it is my opinion that the changing requirements will continue at at least the rate currently being seen. This opinion seems to be supported by a recent action by Iowa Electric Light and Power. They have submitted a five year program for review to the NRC which calls for expenditure of $109 million at their Duane Arnold plant. This program is to cover the utilities estimate of the cost of compliance with NRC regulations over that time period. It does not include normal operation and maintenance nor does it include potential costs for compliance with the degraded core rulemaking under way.

[7]

The overall impact of changing regulatory requirements can be (and has been) significant to the operating life of a nuclear unit. Not only can extensive outages with multi-million dollar fixes be required, several of the earlier plants have been retired by reason of the costs or complexity of bringing an older plant up to date. My previous testimony listed Humboldt Bay #3, Indian Point #1, Dresden #1 and the KRB Gundremmingen Plant (Germany) as units that have been forced into *de facto* retirement in part as a result of a changing regulatory basis. A fifth unit of that vintage has now been added to the list. Italian authorities have decided that the Garigliano Plant will be "deactivated". The exact meaning of that term is uncertain but it includes removal

---

[6] CECO Response to AG Data Request Item 56c.

of the reactor fuel and indefinite termination of operability. The plant has been shut down since 1978 and it has been reported that modifications to bring it into regulatory compliance could cost as much as $40 million. Garigliano is a GE designed plant very similar to Dresden 1. It began operation in 1964.

Steam Generators

The potential for long outages for the repair or replacement of steam generators at pressurized water reactors continues to be a significant reliability issue for PWR's. The latest event reported is at Indian Point 3 where extensive pitting corrosion of steam generator tubes has forced closure of that plant from March 1982 until sometime in the fall. Indian Point 3 is a Westinghouse designed nuclear steam supply system very similar to the Westinghouse units located at Zion on the CECO system. An interesting item to note is that Indian Point 3 was one of

[8]

the first Westinghouse units to go into service using AVT secondary water chemistry control, a procedure expected by the industry to result in fewer operating failures. Both of the Zion units now use the AVT water chemistry control but they were operated for some period of time initially with phosphate control.

A recent NRC report entitled, "Steam Generator Tube Experience" contains a summary Table 1 of operating experience with Westinghouse PWR steam generators through November 1981. A copy of this table is appended as *Schedule 3*.[7] This Schedule shows a number of interesting comparisons. Most of the Westinghouse steam generators now in service consist of Models 44 and 51. Replacement of two Model 51 steam generators has already been required (Surry 1 and 2) and replacement of two Model 44's is planned or in progress (Turkey Point

[7] NUREG-0886, Steam Generator Tube Experience, February, 1982, pp. 18 & 19.

3 and 4). Zion 1 and 2 both utilize Model 51 steam generators and both units are reported to have experienced only one leaking tube each. This incidentally is the same number of leaking tubes reported at Indian Point 3 although Indian Point 3 has a large number of tubes plugged as a result of the extensive pitting that has been experienced there.

In summary, steam generators continue to represent a significant risk to the ongoing performance of PWR's. As was stated in my previous testimony, replacement of the steam generators on a nuclear unit is an extensive job requiring approximately one year outage time and the direct expenditure of approximately $100 million. Nearly all PWR steam generators are exhibiting some indication of degradation or failure, and

[9]

even the latest Westinghouse models have experienced early failures leading to derating or modification requirements. There is no reason to believe at this time that the steam generators to be utilized at the Byron and Braidwood plants will avoid such difficulties.

Primary System Failures

As discussed in the previous testimony, one of the potentially most serious problems impacting on plant life or production is the case of potential failures of primary system components. The failures of the most significant concern are pressure vessels, major piping systems, and critical reactor internals such as jet pumps, steam separators, and various core support structures.

My previous testimony, AG-6, discussed as examples of the concerns expressed under this category the cracking that has been experienced by BWR's with reactor vessel nozzles and in stainless steel piping systems. It also mentioned the problem of pressurized thermal shock which currently jeopardizes the future operation of PWR's. Some additional information relevant to these two issues is now available.

It was reported in March 1982 that the Nine Mile Point 1 Plant would be out of service for an extended period of

time in order to replace reactor vessel furnace sensitized stainless steel safe ends located in the five recirculation loops used in that plant. It is expected that this outage will last approximately one year and will require a substantial amount of high radiation exposure effort. A copy of a May, 1982 Niagara Mohawk letter to the NRC discussing the repairs and the outage

[10]

schedule is appended as *Schedule 4*. Note in particular the comment about contingency planning begun for this job in 1978.[8] This problem is of particular relevance to CECO's Dresden 1 and 2 units since both of those systems also contain sensitized safe ends that are exposed to reactor coolant. Dresden Unit 3 also has four furnace sensitized safe ends remaining but these are of somewhat less concern because they do have a protective layer of crack resistant material on the inner surface (see CECO Response to DR item 88 for confirmation of this information). CECO also reported in response to DR item 101 that consideration has been given to replacement of the sensitized safe ends on Dresden Unit 2 but only $1 million has been authorized for this work. This sum is questionable enough for the direct labor involved in the replacement, but in my opinion would be totally inadequate, considering that (1) no contingency planning has been done,[9] and (2) because of the probable need for systems decontamination necessary to reduce radiation levels.

The NRC review of the pressurized thermal shock (PTS) problem is continuing. No permanent resolution of this problem has been documented and it is likely that uncertainty will exist for some years to come. PTS represents a real risk to the future operation of Zion Units 1 and 2 and could potentially affect both the Byron and Braidwood Plants. A copy of the NRC's Board Notification 82-10 dated March 18, 1982 is appended as *Schedule 5* to this testimony. This notification provides a

---

[8] May 11, 1982 letter, D P Dise to Darrell G. Eisenhut, page 2.

[9] CECO Response to AG Data Request 101.

listing of the potential impact to all operating Westinghouse nuclear units from various accidents that could

[11]

aggravate the PTS condition. The Zion Units, for example, show that the thermal shock transient induced by a small steam break accident could in one event reduce the allowable years of vessel operation from 34 years to 10 years. These values are based upon a commitment to the installation of a low leakage core modification and presumably could have even greater impacts if the core modification is not completed. The potential for PTS at the Byron and Braidwood Units is uncertain at this time. In response to DR item 93, CECO indicated that no design changes have been incorporated in those units to provide additional protection against susceptibility to PTS,[10] although their response to DR item 49 reported that low leakage cores would be installed at the first refueling.[11]

It can be seen therefore that primary system failures continue to represent a significant factor in assessing the likely lifetime of nuclear plants. Some improvements have been made but the subject is still under extensive technical review. Because most of Commonwealth Edison's nuclear units already exist, future design changes may be difficult or impossible to incorporate in an existing plant. Repairs or modifications can be extremely costly and time consuming to perform because of the high radiation levels that may exist at the operating plants. Vessel replacement, for example would be a multi-hundred million dollar task, and failures leading to accidental releases (such as at TMI) can cost in excess of a billion, however, due to the lower probability of maximum cost failures, and have reduced the upper limit cost on several of the plants from that presented in AG-6 (see Table 1).

---

[10] CECO Response to AG Data Request Item 93.

[11] CECO Response to AG Data Request 49.

[12]

Three Mile Island Accident Issues

The requirement for modification at existing and underconstruction CECO plants which has resulted from the Three Mile Island accident investigations were discussed fully in my previous testimony. There appears to be no disagreement with CECO that such modifications are required and the only issue is whether or not adequate provisions have been made for their incorporation in the CECO budget planning. I have previously estimated that TMI issue modifications would cost in the range of $25 to $100 million per plant (per unit). That estimate still appears realistic to me and is one that I recommend for future planning purposes. CECO's five-year budget (1982 through 1986) projects costs for TMI issues ranging from $33 million for the Dresden site to $47 million for Quad Cities. I estimate that approximately 50 percent of the TMI modifications have been completed at this time. Therefore, since all of the CECO plants are basically two unit sites, it appears to me that their budgeting is low by approximately 50 percent. If CECO can demonstrate that a higher percentage of the TMI modifications has already been completed, it is possible that their budgetary numbers may be adequate for the remaining work.

Radiation Level Buildup

My previous testimony discussed the potential problem faced by nuclear operating utilities with the increasing levels of occupational radiation exposure required for operation and maintenance of the nuclear units. The dimensions of this

[13]

problem are basically unchanged from that presented in AG-6. We have received, however, some additional information from CECO in response to data requests which serves to verify the accuracy of the cost ranges presented in my testimony. CECO's response to DR item 45 reports that the projected cost for the Dresden 1 decontamination

(through 1985) is a total of $47.2 million.[12] CECO's response to DR item 96 reports that the initial chemical cleaning of a Dresden 2 or 3 type unit would be in the range of $16 to $23 million. They also estimate that the initial decontamination program for a Zion unit would be approximately $18 to $25 million.[13]

It is my view that continued emphasis will be placed on the reduction of occupational radiation exposure at operating nuclear plants. The application of ALARA (As Low As Reasonably Achievable) type requirements at operating plants will be strengthened. This may require not only utilization of chemical decontamination programs, as previously discussed, but may well require the addition of mock-ups and training facilities and the design and procurement of other tools and facilities aimed at reduction of worker exposure. Such additions will add to the cost of operating plants and could also result in the lengthening of outages necessary for the repair or modification of radioactive components.

Future Safety Requirements

The potential for the imposition of substantial regulatory requirements resulting from the continuing investigation of

[14]

degraded core accidents continues to represent uncertainty for the future of CECO plants. This is particularly true for high population density units such as Zion 1 and 2. CECO has taken the position that Zion 1 and 2 Probabilistic Risk Assessments ("PRA") have been completed and have demonstrated an acceptably low level of risks. In my opinion, this is not the case. First, the NRC's review of the Zion PRA has not been completed and it has been reported that the NRC has taken exception to some non-conservative assumptions utilized in CECO's risk assessment program. Secondly, the NRC and the NRC's

---

[12] CECO Response to AG Data Request Item 45.

[13] CECO Response to AG Data Request Item 96.

Advisory Committee continue to take the position that probabilistic risk assessment is an emerging art and still contains a good deal of uncertainty. I conclude that requirements for future safety must still be considered a strong possibility and that no consideration should be given to changing this view until at least after completion of the degraded core rulemaking now expected to continue into 1983-1984.

Failure of Non-Safety Equipment

This category was well discussed in my previous testimony and my conclusions remain the same.

Conclusions

In my previous testimony, I submitted a back-up sheet for Table 4 which provided the basis for my estimate of the CECO plant impact ranges of plant life issues. The following Table 1 is an updated version of that table which presents my current estimates of the costs and outage times that could be required

[15]

at each of the CECO plants for each of the seven plant life issues discussed. The changes I have incorporated make only a small change to my estimate of the overall impact of plant life issues on the CECO units. Basically, I conclude that the seven plant life issues could shorten the effective operating life of a given nuclear unit by an average of from three to eight years and at a cost of approximately $100 million to $1 billion or more per *unit.* The historical experience predicts an additional shortfall of several years in the achievement of design lifetimes.

From my review of CECO's testimony and response to data requests, it does not appear that these potential costs and early shutdowns have been factored into budget and construction cost estimates. I find that some of these costs (for example the TMI modifications) have been included in CECO's forecast, but it is not apparent how, if at all, the potential impact of the large risk items I have identified are factored into the long range planning and

budget. I recommend that such costs be estimated as accurately as possible and that appropriate allowances be made in the company's operating plan to assure that adequate coverage exists.

There are several ways in which CECO could incorporate these costs in their decisions and accounting practices. The first and most obvious is to use these costs in the decision process in which new construction plans are considered. These costs could play a decisive role in the choice between alternative types of generation.

The second way in which these costs should be considered is in allowances for contingency cash requirements to meet the problems as they occur. One way of doing this is to increase

[16]

the depreciation rate, implicitly recognizing the shorter life expectancy and higher capital costs of nuclear plants. This method has the problem of putting the cash flow outside of the year in which it is needed. Such cash accumulations should be protected from diversion to other purposes by the use of a dedicated "sinking fund" or some similar device. This method would help to avoid serious disruptions of budget and generating capacity in the future (such as is correctly [sic] being experienced by GPU). I recommend the Illinois Commerce Commission direct CECO to perform detailed and serious studies of such risks and to proceed with the creation of such a contingency fund.

Amicus Brief

8

Office - Supreme Court, U.S.
FILED
SEP 10 1982
ALEXANDER L. STEVAS,
CLERK

NO. 81-1945

IN THE

Supreme Court of the United States

OCTOBER TERM, 1982

PACIFIC GAS & ELECTRIC COMPANY, ET AL.,
PETITIONERS
V.
CALIFORNIA STATE ENERGY RESOURCES CONSERVATION & DEVELOPMENT COMMISSION,
RESPONDENTS

ON WRIT OF CERTIORARI TO THE
UNITED STATES COURT OF APPEALS FOR THE
NINTH CIRCUIT

BRIEF OF AMICUS CURIAE, THE LEGAL FOUNDATION OF AMERICA (MERGED JUNE 1982 INTO GULF & GREAT PLAINS LEGAL FOUNDATION OF AMERICA), URGING REVERSAL

DAVID CRUMP
LAW SCHOOL
UNIVERSITY OF HOUSTON
HOUSTON, TEXAS 77004
(713) 749-3878
ATTORNEY OF RECORD

J. GREGORY COPELAND
BAKER & BOTTS
ONE SHELL PLAZA
HOUSTON, TEXAS 77002

OF COUNSEL:
WILKES ROBINSON
127 W. 10TH ST.
KANSAS CITY, MO. 64105
H.E. BOWER
5 GREENWAY PLAZA
HOUSTON, TEXAS

TABLE OF CONTENTS

TABLE OF AUTHORITIES	ii
BRIEF OF AMICUS CURIAE	1
INTEREST OF AMICUS CURIAE	1
STATEMENT OF THE CASE	2
SUMMARY OF ARGUMENT AND ARGUMENT	4
CONCLUSION	11

TABLE OF AUTHORITIES

CASES

General Elec. Co. v. Tyrone, Nos. 80-C-6835 & 81-C-461 (D. Ill. Oct. 12, 1981) 3

Natural Resources Defense Council v. United States Nuclear Regulatory Comm., No. 74-1586 (D.C. Cir. April 12, 1982) 3

Pennsylvania v. Nelson, 350 U.S. 497 (1956) 11

Perez v. Campbell, 402 U.S. 637 (1971) 9

Southern Louisiana Area Rate Cases, 428 F.2d 414 (5th Cir. 1970) 2

Vermont Yankee Nuclear Power Corp. v. Natural Resources Defense Council, 435 U.S. 519 (1978) 3

STATUTES AND LEGISLATIVE MATERIALS

Atomic Energy Act 10

California Nuclear Laws 2

10 C.F.R. pt. 100 6

Clean Air Act 10

Natural Gas Policy Act 10

Powerplant & Industrial Fuel Use Act 10

Surface Mining & Reclamation Act of 1977 10

SECONDARY AUTHORITIES

American Chamber of Commerce Research Ass'n, Fourth Quarter Inter-City Cost of Living Indicators (1981) 2

California Assembly Committee on Natural Resources, Land Use & Energy, Reassessment of Nuclear Energy in California: A Policy Analysis of Proposition 15 and Its Alternatives (1976) 4

Murphy & LaPierre, Nuclear Moratorium Legislation in the States and the Supremacy Clause: A Case of Express Preemption, 76 COLUM. L. REV. 393 (1976) 6

ELLIOT'S DEBATES ON THE CONSTITUTION 5

THE FEDERALIST No.44 5

M. LAIRD, ENERGY—A CRISIS IN PUBLIC POLICY (1977) 10

R. POSNER, ECONOMIC ANALYSIS OF LAW (2d ed. 1977) 9

P. SAMUELSON, ECONOMICS (6th ed. 1964) 11-12

NO. 81-1945

IN THE

Supreme Court of the United States

OCTOBER TERM, 1982

PACIFIC GAS & ELECTRIC COMPANY, ET AL.,
PETITIONERS
V.
CALIFORNIA STATE ENERGY RESOURCES CONSERVATION & DEVELOPMENT COMMISSION,
RESPONDENTS

ON WRIT OF CERTIORARI TO THE
UNITED STATES COURT OF APPEALS FOR THE
NINTH CIRCUIT

BRIEF OF AMICUS CURIAE, THE LEGAL FOUNDATION OF AMERICA (MERGED JUNE 1982 INTO GULF & GREAT PLAINS LEGAL FOUNDATION OF AMERICA), URGING REVERSAL

INTEREST OF AMICUS CURIAE

The Legal Foundation of America ("LFA") is a nonprofit corporation supporting the operations of a public interest law firm.[1] Its goals include preservation of the market system and establishment of a better balance between the federal government and the States. All litigation undertaken by LFA is approved by its Board of Trustees, the majority of whom are attorneys.

---

1 LFA filed a brief supporting grant of certiorari and now appears on the merits. In June 1982, LFA merged into Gulf & Great Plains Legal Foundation of America.

LFA has particular expertise in matters relating to energy. During the past twleve months, it has been a participant in litigation to preserve market pricing of oil and gas in cases arising from Kansas, Wyoming, Colorado, Oklahoma and Texas. It has also supported the market system in uranium resources, undertaken efforts to maintain a viable nuclear industry, and participated in litigation concerning cogeneration of electricity. LFA is affiliated with the Gulf Coast & Great Plains Legal Foundation of Kansas City, which has undertaken similar activities with respect to coal.

Most of LFA's members and Trustees reside in the central Southwest. This area has large deposits not only of oil and gas, but of lignite and uranium as well. Currently, a large portion of natural gas produced in the region is transported to California. Such gas is priced far below market, owing to price regulation. Because of desire to maintain assured supply, this region has itself avoided such regulation of gas consumed intrastate.[2] LFA's members therefore pay utility prices above the national average.[3] The actions taken by California that are complained of here will aggravate this situation, which cannot be resolved in the absence of coordinated national effort.

STATEMENT OF THE CASE

This litigation concerns the "California Nuclear Laws," a series of enactments hostile to the development of nuclear generating capacity. Two statutory requirements are of principal concern here.[4] First, Cal. Publ. Res. Code sec. 25524.1 provides that the State Energy Commission shall determine on a case-by-case basis, before authorizing construction, the adequacy of a proposed nuclear power plant's spent storage capacity, and shall pro-

---

2 Historically, California has undertaken vigorous litigation to ensure the maintenance of such prices below market. See, e.g., Southern Louisiana Area Rate Cases, 428 F.2d 414 (1970). Such efforts have been a factor in inducing shortages. Id.

3 See, e.g., American Chamber of Commerce Research Ass'n, Fourth Quarter Inter-City Cost of Living Indicators (1981).

hibit construction unless it is satisfied with the method of spent nuclear fuel storage. The court of appeals held the constitutionality of this section not ripe for review. Secondly, Id. sec 25524.2, the "moratorium" provision, places an absolute statewide moratorium upon new plant construction until and unless the NRC certifies a particular method of waste disposal, which the California Commission must independently determine to meet California's own state waste disposal requirements. NRC has confronted the problem of waste disposal repeatedly and frequently. [5] California's statutes represent an open disagreement with NRC's approach. They reflect an effort to force it to address California's concerns under a different timetable and in a different manner than that chosen by NRC and to choose a method of

---

4 The court of appeals held that the "moratorium" provision was ripe for decision but upheld its constitutionality. The court of appeals refused to consider the constitutionality of the "case-by-case" provision, section 25524.1, because it concluded that that section was not ripe for review.

Since a declaratory judgment is sought, and since the latter provision concretely and unavoidably affects nuclear plant planning in California and elsewhere, it is submitted that 25524.1 is ripe for review. However, this brief concerns the moratorium provision primarily.

5 The question of the adequacy of NRC's approach to waste disposal has been before this Supreme Court. In Vermont Yankee Nuclear Power Corp. v. Natural Resources Defense Council, 435 U.S. 519 (1978), the Court reversed a decision adverse to NRC concerning the issue. On remand, the District of Columbia Circuit again held the rules inadequate, in an opinion rendered less than a month before this writing. Natural Resources Defense Council v. United States Nuclear Regulatory Commission, No. 74-1586 (D.C. Cir. April 27, 1982). A petition for certiorari in this most recent decision is not yet due as of this time. Such litigation represents a direct attack on NRC's approach, while California's Nuclear Laws are an "end run." It would be ironic if NRC's fuel cycle rules were upheld and if California's Nuclear Laws were permitted to stand.

Similarly, several States have attempted to enact legislation preventing nuclear waste disposal. Several such laws have been invalidated as inconsistent with the commerce clause. E.g., General Electric Co. v. Tyrone, Nos. 80-C-6835 & 81-C-461 (D. Ill. Oct. 12, 1981). Such holdings, which require States to allow disposal of out-of-State nuclear wastes, likewise provide an ironic contrast to the California Nuclear Laws.

waste disposal satisfactory to California's State Commission. [6]

SUMMARY OF ARGUMENT AND ARGUMENT

The supremacy clause of the Constitution was one of the principal limits on State power created by the Founders. The Constitutional Convention resulted, in large measure, because the Articles of Confederation permitted individual States to take actions contrary to the national interest. These included actions such as those of California here: laws that operated to the sole benefit of in-State residents, disadvantaged other States, and prevented coordinated solutions to common problems. Alexander Hamilton summarized this reasoning by criticizing the tendency of States to "throw off the burdens of government upon their neighbors."

---

6 The California Assembly explained its reasoning thus: "Waste disposal safety is not directly addressed by the bills, which ask only that a method be chosen and accepted by the federal government." Cal. Assembly Committee on Resources, Land Use & Energy, Reassessment of Nuclear Energy in California: A Policy Analysis of Proposition 15 and Its Alternatives 156 (1976).

The California Assembly did not have authority to act for these reasons. It does not have the power under the Constitution to hold federal energy policy hostage in order to force NRC to "choose" or "accept" any particular approach. The situation with which NRC was faced was described as follows by the Court of Appeals:

> Critics of nuclear power believed that the methods . . . being considered by the federal government would be inadequate . . . . The nuclear industry, on the other hand, believed that the methods . . . would prove adequate . . . .

Slip Op. at 31-32. NRC made a decision regarding its responsibilities in light of this disagreement, concluding that those responsibilities were met by continuing the licensing process. California simply disagrees with that decision, and its Nuclear Laws are an effort to force NRC to adopt a different approach instead. The California Assembly Committee even accused NRC of "poor planning" in this regard. Cal. Assembly Committee, supra, at 18.

Policy decisions must often be made with incomplete information. Indeed, since information is never perfect, decisions based upon incomplete information are a part of the human condition. The present case concerns whether a State can prevent the national government from engaging in such policy making in a real-world context.

II ELLIOT'S DEBATES 366-67. The Federalist, which was the principal document reflecting the consensus under which the Constitution was ratified, contains repeated reference to the need for centrally administered laws to prevent regional "factions" from benefitting themselves at the expense of others. E.g., THE FEDERALIST No. 44.

California's laws, if upheld, would necessitate that each State take its place in a kind of reverse bandwagon against the development of nuclear power, including States that might consider nuclear development nationally advantageous. Laws such as California's do not decrease the demand for electricity, nor do they prevent siting of nuclear facilities in contiguous States or the interstate transmission of the electricity so generated.[7] There are finite risks associated with nuclear power as well as political liabilities for legislators who support it, but significant advantages in the form of cheap and abundant electricity would result from the location of nuclear facilities in adjacent States. Thus a sensible strategy for cynical legislators might be to oppose in-State construction and to support policies that make neighboring States a "dumping ground" for the political disadvantage of nuclear power. Unless contiguous States affirmatively follow the example of California and artificially restrict nuclear development, they will find themselves to be preferred sites for generating facilities to serve markets in States, such as California, that have cast off the burdens upon their neighbors.

In some instances, furthermore, common interests might well be served by the installation of generating capacity in one State to serve markets in other States. A nuclear facility serving Boston, for example, might be proposed in New Hampshire. A site in such a State, which may be uniquely suited in the region to serve Maine, Massachusetts and other States, might be the best

---

7 The United States is covered by electric grids interconnected to prevent blackouts and administered under the provisions of the Federal Power Act. Events in one State can easily cause damage to facilities located in another, including power losses. See Appendix A (diagrammatic representation of United States electrical system interconnects).

location in terms of minimization of radiation and environmental hazards. It might be in a small corner of New Hampshire, where few of the State's population are to be found. NRC's function is to make such siting choices in the national interest. Its responsibility for radiation and environmental considerations is reflected in its published Siting Criteria.[8] If California's laws succeed, however, New Hampshire or any other similarly situated State would have a simple means of frustrating the mission of the NRC. The agency might be forced to approve an alternative site less satisfactory from the standpoint of radiation safety, solely because the alternative happened to be in a State that did not have a law patterned upon California's. But that alternative would itself be short-lived, because if California's laws succeed, each State would not be merely able to frustrate optimal siting in this manner; it would be forced by the bandwagon effect to do so to protect its own interests.

This possibility is not conjectural. More than half the States have already considered laws reciprocal to California's, and several have been enacted.[9] The variation among such laws is itself an

---

8 The Reactor Site Criteria are at 10 C.F.R. pt. 100. In particular, section 100.10 lists the following considerations for siting decisions:

> (a) Characteristics of reactor design . . . .
> (b) Population density and use characteristics of the site and environs . . . .
> (c) Physical characteristics of the site, including seismology, meteorology, geology, and hydrology.

If California followed "land use" criteria for evaluating the three sites required to be submitted to it, it would necessarily consider these identical factors--but it would evaluate them inconsistently with the NRC if, as it claims, it does not intend to consider reactor safety and radiological hazards. Alternatively, if California intends to consider radiological safety in evaluating its "land use" concerns, it enters a preempted area. In either event, the three site requirement engenders inevitable conflicts with NRC's role.

9 Murphy & La Pierre, Nuclear Moratorium Legislation in the States and the Supremacy Clause: A Case of Express Preemption, 76 COLUM. L. REV. 393 (1976). The Court of Appeals cited this work, but it failed to note that the Authors' conclusion is that such legislation is "clearly" preempted.

impediment to nuclear development. Two scholars, writing in the *Columbia Law Review*, undertook a comprehensive study of such State laws and concluded as follows:

> There can be little doubt about the objective of most of the proposed state measures considered here. The supporters to not like nuclear power and seek to stop (indeed roll back) its development. They would do so at the federal level; failing that, they seek to do so at the state level. The opposition is explicity based on fear of the hazards of a nuclear power program—principally the possibility of a catastrophic reactor accident, the problem of long-term hazards of storing "wastes" produced in the fission process, and the possibility of diversion of nuclear materials, especially plutonium, by terrorist groups. All of these matters concern radiological safety and are within the area of control expressly reserved to the federal government by the Atomic Energy Act. They are the subject of extensive—some think excessive—regulation by the Nuclear Regulatory Commission, as successor to the AEC, whose special responsibility has only recently been reaffirmed.
>
> Although the proposed bills are sometimes justified as state regulation, in most cases the claim of regulation is patently a subterfuge for the real objective—prohibition. Although the bills are phrased in terms of "conditions" to be met before further construction, the conditions are, as a practical matter, incapable of fulfillment. It is generally agreed that the probability of a catastrophic accident at a nuclear power plant is very low, but it will never be zero. There is no way that one can now be sure that wastes can be stored without accident throughout eternity, and no one can develop a system which

> will certainly foil a terrorist group bent on making a bomb. Similarly, a pre-assurance of "full compensation" for an unknowable amount of potential damages is impossible.
>
> But even if the bills are viewed as regulatory they would put the states into an area exclusively regulated by the federal government (and in which the states have no expertise). At best they would be redundant; at worst they would be in conflict with federal programs. But whether redundant or conflicting, they are preempted by the Atomic Energy Act. If enacted, the bills almost certainly would be declared invalid. In the meantime, however, they would cause a great deal of confusion and delay and might result in the choice of fossil fuel plants by some companies who did not wish to take even the small risk that the acts would be upheld. The problem of delay and confusion is particularly acute in California and Oregon, where anti-nuclear power initiatives have already been placed on the 1976 ballot.

Murphy & LaPierre, supra note 9, at 455. The Nuclear Laws at issue here are a substitute for the California ballot initiative Murphy and LaPierre refer to as unconstitutional.

Perhaps the most distasteful aspect of the bandwagon effect is the duplicity that the Court of Appeals' opinion encourages. There can be no question that California's legislators responded to constituents whose concern was radiation hazards. But legislation based on that concern would be preempted, and therefore, legislators masked their motivation by pretexts. The California Assembly acted in response to a ballot initiative founded explicitly on radiation concerns. Miraculously, however, the Assembly responded by Nuclear Laws purporting completely to omit any such concerns. Since every safety concern is, in the final analysis, the obverse of an economic concern, the Assembly could readily

express a motivation that was economic—even though the "economics" are based upon radiation.[10] Furthermore, since radiation protection is closely related to siting and land-use concerns,[11] the Assembly could encompass its response to constituents' radiation concerns in those terms. The Court of Appeals was not persuaded in the matter by the insight of the District Court in one of these cases, below, which stated:

> . . . The underlying premise seems to be that any sort of regulation at all is permissible as long as a state legislature is willing and ingenious enough to conjure up a legislative purpose other than radiation control. The evil inherent in giving conclusive effect to declared state legislative purposes to uphold a state statute or regulation which would otherwise be preempted has previously been recognized by the Supreme Court. Perez v. Campbell, 402 U.S. 637, 651-52, 91 S.Ct. 1704, 1712, 29 L.Ed.2d 233 (1971). . . .
>
> More generally, the danger inherent in interpreting section 2021(k) in the manner defendants suggest is that the zone of exclusive federal regulation under section 2021(c) could readily be nullified through careful tailoring of legislative purposes. . . . It is scarcely credible that Congress, in enacting section 2021(k), intended to furnish the States with a means of evading and undermining the NRC's exclusive regulatory authority under section 2021(c).

---

10 See R. POSNER, ECONOMIC ANALYSIS OF LAW ch.10 (2d ed. 1977). A targeted level of safety can be reached by application of a corresponding level of resource commitment, and in this sense every safety concern is really an "economic" one.

11 The land use concerns must inevitably conflict with NRC's siting criteria in any event. See note 8 supra and accompanying text.

472 F. Supp. at 198. These conclusions are even more serious since the bandwagon effect would penalize those States unwilling to engage in this subterfuge. Those States whose politicians debated nuclear concerns honestly and refused to misstate the reasons for their legislation would have nuclear facilities "dumped" among their populations, to serve States whose politicians were willing to dissemble.

Finally, the national concerns underlying the Atomic Energy Act and sucessor legislation[12] are underscored by the interrelationship of energy sources and energy legislation.[13] The Powerplant and Industrial Fuel Use Act ("PIFUA") and the Natural Gas Policy Act ("NGPA") reflect recognition that natural gas cannot continue indefinitely to be used cheaply as a boiler fuel. Indeed, PIFUA disallows construction of electric generating facilities fired by natural gas after 1990. As for coal, as one commentator has colorfully put it, "There are only two problems with coal: You can't dig it and you can't burn it." M. LAIRD, ENERGY--A CRISIS IN PUBLIC POLICY 8 (1977). National policy expressed in such legislation as the Clean Air Act and the Surface Mining and Reclamation Act of 1977 is the reason. These

---

12 The Congressional policy underlying the Atomic Energy Act is quite clearly one of facilitating the development of nuclear energy. That purpose is so clear as to indicate, alone, the error of the holding of the Court of Appeals.

The Court of Appeals avoided this result by recognizing the purpose of energy development but explaining that Congress did not have the intent to promote it "at all costs." Such reasoning amounts to a license for States to frustrate any federal policy on any subject, because no federal policy is carried out "at all cost." Even such basic national concerns as defense, environmental protection, and the guarantee of free speech are not absolute and are not carried out at "all cost."

13 Preemption reasoning may be based upon several different enactments. See, e.g., Pennsylvania v. Nelson, infra (pre-emption found on the basis of three separate enactments with different subject matter and passed at different times). Since energy resources are closely interrelated and federal policy must and does take this interrelationship into account, the case at bar is particularly appropriate for such treatment.

energy sources are substitute goods. Maps of electric interconnects, natural gas flow, and coal transportation routes show the interstate character of their production and use.[14] California's legislation will, quite dramatically, frustrate national policy with reference not only to nuclear generation but natural gas as well, in that it will induce California utilities to exhaust natural gas supply from their principal sources—New Mexico, Texas and Alaska—more rapidly than they would otherwise.[15]

Preemption reasoning is enhanced by the finding not only of a national problem, but one that requires a coordinated national solution. *See, e.g., Pennsylvania v. Nelson*, 350 U.S. 497, 76 S.Ct. 477, 100 L.Ed.2d 640 (1956). In *Nelson*, the Court was faced with state Sedition Acts that supplemented parallel federal legislation on the subject of internal security. The Court concluded that the state legislation was preempted. It looked to three factors: the pervasiveness of the regulatory scheme, the dominance of the national interest, and the danger of state conflict with actual administration objectives. If these concerns are considered here, the conclusion is inescapable that Congress intended NRC to occupy the entire field of radiation-related siting decisions and that California's Nuclear Laws conflict with that intention.

CONCLUSION

This case concerns issues of national policy. The bandwagon effect, the danger that it will force States to "throw off the burdens of government upon their neighbors," the encouragement of subterfuge, and the effects upon national policy regarding other energy sources, all transform the case into one affecting not just California, but all of the States in the Union. The large number of state statutes either passed or under consideration that would halt nuclear development even in the face of NRC licensing is a further indication of preemption.

---

14 See Appendices infra.

15 No market is an island unto itself: when wool [prices] rise, ... it raises the [prices] of rival

Respectfully Submitted,

David Crump
Professor of Law
Law School
University of Houston
Houston, Texas 77004
(713) 749-3878
Attorney of Record for Amicus Curiae

J. Gregory Copeland
Baker & Botts
One Shell Plaza
Houston, Texas 77002

CERTIFICATE OF SERVICE

I hereby certify that I have, prior to filing this Brief, served three (3) copies each upon all counsel of record by depositing such copies in a United States Post Office, namely the Central Post Office at Houston, Texas, first class postage prepaid, addressed to: John R. McDonough, Ball, Hunt, Hart, Brown & Baerwitz, 450 N. Roxbury, Suite 500, Beverly Hills, CA 90210; William M. Chamberlain, California Energy Resources Conservation and Development Commission, 1111 Howe Ave., Sacramento, CA 95825; Ralph Cavanaugh, Natural Resources Defense Council, Inc., 25 Kearny St., San Francisco, CA 94108; and Sam Kazman, et al., Pacific Legal Foundation, 1990 M St., N.W., Suite 550, Washington, D.C. 20036; all in accordance with Rule 28.3 of the Rules of this Court.

---

goods like cotton that some demanders will turn to . . . .
P. SAMUELSON, ECONOMICS 68 (6th ed. 1964).

APPENDIX A
UNITED STATES INTERREGIONAL ELECTRIC INTERCONNECTIONS

This schmatic diagram shows electric regional interconnections in the United States system. The grid labelled "WSCC" includes most Western States of the nation, including California, and it is interconnected with "MARCA," the Mid-Continent Reliability Co-ordination Agreement. Interstate transmission of power is readily possible within regions. The diagram is taken from West Texas Utilities Co. v. Texas Elec. Serv. Co., 470 F. Supp. 798, 843 (N.D. Tex. 1979), which explains electrical power interconnection in detail. See also FPC v. Florida Power & Light Co., 404 U.S. 453 (1972).

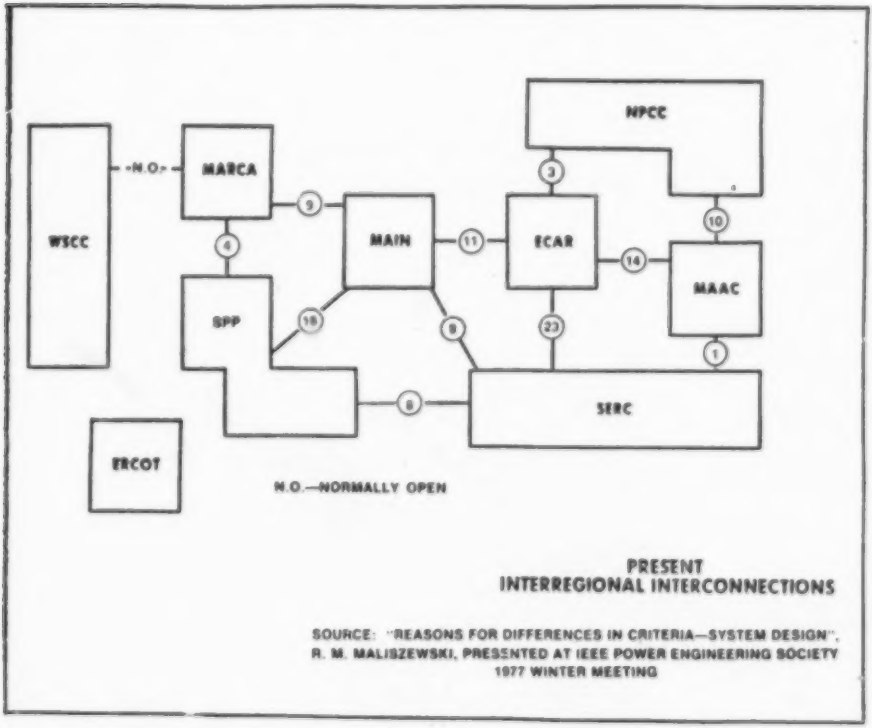

PRESENT
INTERREGIONAL INTERCONNECTIONS

SOURCE: "REASONS FOR DIFFERENCES IN CRITERIA—SYSTEM DESIGN", R. M. MALISZEWSKI, PRESENTED AT IEEE POWER ENGINEERING SOCIETY 1977 WINTER MEETING

APPENDIX B
NATURAL GAS FLOW DIAGRAM

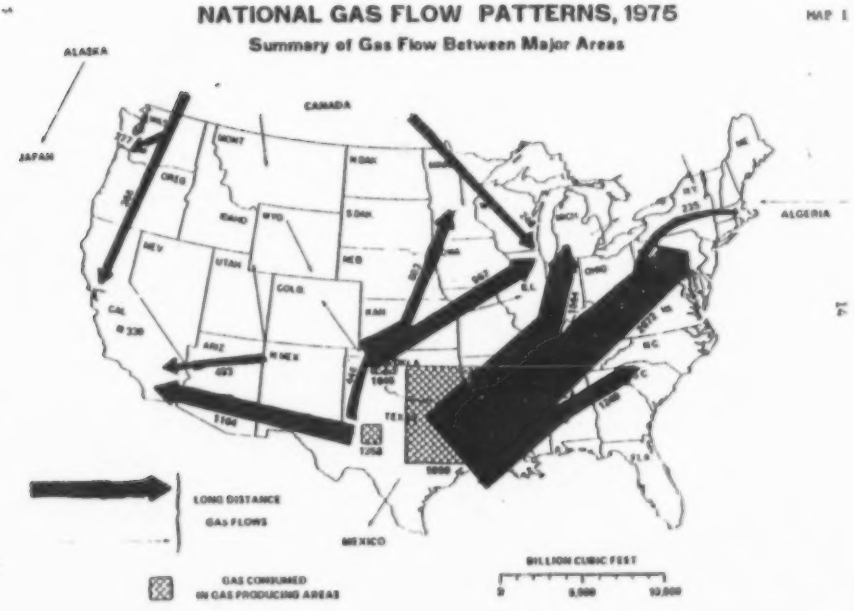

Amicus Brief

9

Office - Supreme Court, U.S.
FILED
NOV 22 1982
ALEXANDER L. STEVAS,
CLERK

No. 81-1945

In the Supreme Court of the United States

OCTOBER TERM, 1982

PACIFIC GAS AND ELECTRIC COMPANY, ET AL.,
PETITIONERS

v.

STATE ENERGY RESOURCES CONSERVATION &
DEVELOPMENT COMMISSION, ET AL.

ON WRIT OF CERTIORARI TO THE UNITED STATES COURT OF APPEALS FOR THE NINTH CIRCUIT

BRIEF OF THE STATE OF MAINE AS AMICUS CURIAE SUPPORTING AFFIRMANCE

JAMES E. TIERNEY
Attorney General
RUFUS E. BROWN
Deputy Attorney General
*H. CABANNE HOWARD**
Senior Assistant Attorney General
GREGORY W. SAMPLE
Assistant Attorney General
Department of the Attorney General
State House, Station 6
Augusta, Maine 04333
(207) 289-3051

**Counsel of Record*

TABLE OF CONTENTS

Page

Table of Authorities iii

Interest of The State of Maine 1

Question Presented 3

Summary of Argument 3

Argument 4

I. Historic Police Powers Are At Issue 4

II. The Congress Intended to Preserve the Full Scope of Traditional State Public Utility Regulation 5

A. Section 271 of the Atomic Energy Act Expressly Preserves From Preemption State Public Utility Regulatory Authority Over Nuclear Power Facilities 5

B. The Federal Power Reserved by Section 274(c) Does Not Overlap the State Authorities Preserved by Sections 274(k) and 271. 8

C. Any Federal Promotional Purpose Does Not Preempt Traditional State Public Utility Regulation 10

Conclusion 10

TABLE OF AUTHORITIES

CASES

Huron Portland Cement Co. v. Detroit, 362 U.S. 440 . . 7

Maun v. United States, 347 F.2d 970 (9th Cir.) 5

Minnesota v. NRC, 602 F.2d 412 (D.C. Cir.) 7

Ray v. Atlantic Richfield Co., 435 U.S. 151. . . . . 5, 7, 9

Rice v. Santa Fe Elevator Corp., 331 U.S. 218 5

Vermont Yankee Nuclear Power Corp. v. NRDC, 435 U.S. 519. 6

CONSTITUTION

United States Constitution, Art. VI, Cl. 2 4

STATUTES

Atomic Energy Act of 1954, ch. 1073, 68 Stat. 919, 42 U.S.C. (& Supp. IV) 2011 *et seq.* 1, 5, 8

Section 271, 42 U.S.C. 2018 . . . . . 3, 5, 6, 7, 8, 9, 10

Section 274, 42 U.S.C. (& Supp. IV) 2021 . . . . . 8, 9

Section 274(c), 42 U.S.C. (& Supp. IV) 2021 (c) 8, 9

Section 274(k), 42 U.S.C. 2021(k) 3, 8, 9, 10

Amendment of 1965, 79 Stat. 551 5

Cal. Pub. Resources Code § 25524.1(b). 2

Cal. Pub. Resources Code § 25524.2 . . . . . 1, 2

Me.Rev.Stat., Tit. 10 § 51 . . . . . 1, 7

Me.Rev.Stat., Tit. 10 § 161 *et seq.*. 3

Me.Rev.Stat., Tit. 10 § 171 *et seq.*. 3

Me.Rev.Stat., Tit. 10 § 253 . . . . . 1, 2

Me.Rev.Stat., Tit. 10 § 254(1). 2

Me.Rev.Stat., Tit. 35 § 13-A. 4

Me.Rev.Stat., Tit. 35 § 51. 4

Me.Rev.Stat., Tit. 38 § 361-D. 3

Me.Rev.Stat., Tit. 38 § 481 *et seq.*. 2

MISCELLANEOUS

Hearings Before the Joint Committee On Atomic Energy on Federal-State Relations in the Atomic Energy Field, 86th Cong., 1st Sess. (1959) 10

1 A.J.G. Priest, *Principles of Public Utility Regulation,* 276 (1969) 7

S. Rep. No. 870, 86th Cong., 1st Sess. (1959) 8

In the Supreme Court of the United States

OCTOBER TERM, 1982

No. 81-1945

PACIFIC GAS AND ELECTRIC COMPANY, ET AL., PETITIONERS

v.

STATE ENERGY RESOURCES CONSERVATION & DEVELOPMENT COMMISSION, ET AL.

ON WRIT OF CERTIORARI TO THE UNITED STATES COURT OF APPEALS FOR THE NINTH CIRCUIT

BRIEF OF THE STATE OF MAINE AS AMICUS CURIAE SUPPORTING AFFIRMANCE

INTEREST OF THE STATE OF MAINE

The State of Maine has a significant interest in questions of federalism concerning atomic energy and nuclear materials, and thus in the Court's decision of this case. The Maine Legislature has enacted several different laws to regulate activities involving atomic energy and nuclear materials, including statutes nearly identical to the two California laws under review. The Legislature's expressed intent has been to exercise the State's traditional and reserved powers to the maximum extent consistent with the Atomic Energy Act of 1954. 10 Me.Rev.Stat. § 51.

The same concept embodied in California Public Resources Code § 25524.2, barring nuclear power plant certification until the federal government has approved a means of waste disposal, is found in Maine's statutes governing public utilities. 10 Me.Rev.Stat. § 253 provides:

§ 253. **Power to Certify**

The [Public Utilities] commission shall not certify any

nuclear power plant until the following condition is met:

> 1. *Commission finding of United States identification and approval of technology.* The commission finds that the United States Government, through its authorized agency, has identified and approved a demonstrable technology or means for the disposal of high-level nuclear waste.[1]

The other California statute under review, Public Resources Code § 25524.1(b), requires a case-by-case state finding that capacity for spent fuel rod storage is or will be available when needed, as a pre-condition to certification of a new nuclear power generating facility. This concept is embodied in 10 Me.Rev.Stat. § 254(1), although Maine's statute addresses the capacity of ultimate waste disposal facilities, rather than of interim storage facilities, to meet the projected needs of the plant for which state certification is sought.

Maine also has a full range of environmental protection statutes which may be affected by the resolution of the federalism questions presented in this case. These laws govern air pollution, water pollution, waste disposal facilities, and new construction projects generally which may have a major impact upon the natural environment or established land uses. Chief among these is the Site Location of Development Law, 38 Me.Rev.Stat. § 481 *et seq.*, a uniquely broad statute by which the State controls the siting of all major new development, ranging from energy production facilities to residential subdivisions with as few as five lots, based upon consideration of all impacts on the surrounding natural environment and existing land uses. Other Maine statutes express the intention of the State to exercise to the fullest its jurisdiction over high-level

---

[1]Unlike California's provision, Maine's law is addressed directly and exclusively to the state's Public Utilities Commission, but the requirement of a state finding that there has been federal approval of a waste disposal technology prior to nuclear power plant certification serves the same function, in the same regulatory framework, as California's § 25524.2. Maine's statute, containing section 253 and the section next cited, is reproduced as an appendix to this brief.

radioactive waste disposal, 10 Me.Rev.Stat. §161 *et seq.* and 38 Me.Rev.Stat. § 361-D, and low-level radioactive waste disposal, 10 Me.Rev.Stat. § 171 *et seq.*

QUESTION PRESENTED

Does the Atomic Energy Act preserve to the states the traditional scope of their generic public utility certification and ratemaking powers, with respect to nuclear power generating facilities?

SUMMARY OF ARGUMENT

Section 271 of the Atomic Energy Act, 42 U.S.C. § 2018, expressly preserves to the states their public utility regulatory authority over nuclear power generating facilities. The California statutes under review here (and similar requirements in Maine and other states) require a minimally adequate factual basis upon which to estimate the cost of the electricity proposed to be generated from atomic energy. The required determinations provide a necessary foundation for the state's public utility commission to discharge its traditional functions of certification of new construction and ratemaking. As such, they fit squarely within the express preservation of state public utility regulatory authority in section 271 of the Atomic Energy Act.

State public utility regulation of nuclear power plants, especially in some of its established subordinate aspects, is more explicitly shielded from preemption by section 274(k), 42 U.S.C. § 2021(k). The certification and ratemaking functions that are at the heart of state public utility regulation have traditionally entailed consideration of factors of safety, reliability and adquacy of proposed energy production facilities. In the case of nuclear power generation, the future course of federal regulation of radioactive waste storage and disposal depends upon unresolved questions of public health, safety and national security. To the extent that these uncertainties of radiological safety may affect projections of future electrical supply or its cost, § 274(k) protects the state's consideration of them in the power plant certification process, since that consideration is

plainly undertaken "for purposes other than protection against radiation hazards."

To hold that neither Atomic Energy Act provision is sufficient to sustain California's statutes under the Supremacy Clause is to remove utility-owned nuclear generating plants from the established jurisdiction of state public utility commissions.

ARGUMENT

I. HISTORIC STATE POLICE POWERS ARE AT ISSUE.

It is beyond any reasonable dispute that the States have historically held and exercised the powers to establish and regulate public utilities, to protect the public health and safety, and to regulate land use and the quality of the natural environment.

The Maine statutes analogous to the California statutes at issue here rest directly upon the historic and fundamental responsibility of the State Public Utilities Commission to certify the "public convenience and necessity" of new electric power generating facilities, 35 Me.Rev.Stat. § 13-A, and to set just and reasonable rates for the power produced by such facilities, 35 Me.Rev.Stat. § 51, and upon the fundamental obligation of public utilities "to furnish safe, reasonable and adequate facilities." *Id.* Under this standard format for state public utility regulation, applicable equally to all forms of electric power generation, a public utility commission's determination to certify a new generating facility, and its concomitant power to set public utility rates, must be based upon a demonstrated need for a new power source, and the cost-effectiveness of the means of generation chosen. These determinations, in turn, require that the commission be in possession of all relevant cost estimates, including those for storage and disposal of nuclear wastes.

To be sure, these traditional state powers are held subject to the Supremacy Clause of the United States Constitution, Article VI, Clause 2, and thus may be displaced by the actions of

the United States Congress. Under the prevailing interpretation of the Supremacy Clause, however, the preemption of these historic state powers occurs only if that is "the clear and manifest purpose" expressed by the Congress, *Rice v. Santa Fe Elevator Corp.*, 331 U.S. 218, 230 (1947); *Ray v. Atlantic Richfield Co.*, 435 U.S. 151, 157 (1978).

The suggestion of petitioners[2] that "in the case of nuclear power, preemption analysis is different . . . because this subject matter began as a federal government monopoly" is made without citation and is unsupportable. The claim merely begs the question: whether the 1946 statutes establishing the federal government's monopoly preempted the state's historic police powers.[3] The decision by Congress in the Atomic Energy Act of 1954 to give public utilities access to and control over "special nuclear material" for commercial electric power generation necessarily implicated another branch of the historic powers of the States. This change merely gives rise to the question of whether Congress clearly and manifestly displaced state regulation of public utilities, rather than disposing of it.

II. THE CONGRESS INTENDED TO PRESERVE THE FULL SCOPE OF TRADITIONAL STATE PUBLIC UTILITY REGULATION.

A. Section 271 of the Atomic Energy Act Expressly Preserves From Preemption State Public Utility Regulatory Authority Over Nuclear Power Facilities.

Section 271 of the Atomic Energy Act, 42 U.S.C. § 2018, provides in pertinent part:

> Nothing in this chapter shall be construed to affect

---

[2]Petitioners' Brief at 20.

[3]*See Maun v. United States*, 347 F.2d 970 (9th Cir. 1965), holding a research facility owned by the Atomic Energy Commission to be subject to municipal zoning ordinances. The principle was overturned only by subsequent Congressional amendment of the Atomic Energy Act. 79 Stat. 551 (1965).

> the authority or regulations of any Federal, State, or local agency with respect to the *generation, sale or transmission* of electric power produced through the use of nuclear facilities licensed by the Commission. [Emphasis added].

Petitioners concede that the Atomic Energy Act is not offended when a state public utilities commission determines whether or not additional generating capacity is needed, even though the proposal may be to provide it with nuclear power. (Pet. Br. 31, n. 33). Such determinations fall squarely within Section 271 of the Atomic Energy Act, 42 U.S.C. § 2018, and thus are expressly preserved to the states.[4] *Vermont Yankee Nuclear Power Corp. v. NRDC,* 435 U.S. 519, 550 (1978). In its brief in support of petitioners, the United States concedes that:

> . . . Section 271 envisions state control over such matters as to the need for additional power, [citation omitted] the rates to be charged, and the manner in which power is to be distributed. (Br. 22).[5]

The sphere of public utility regulation expressly preserved to the states in Section 271 is plainly a multi-faceted endeavor, at the heart of which lies a calculation of cost. The issuance of a Certificate of Public Convenience and Necessity and subsequent ratemaking inevitably require two intertwined determinations: that the additional generating capacity is needed, and that the means proposed to provide it are cost-effective. *Necessarily,* the latter determination requires that the full costs of generating the power be known (for they are to be recovered

---

[4]This is so even though a State's refusal to allow construction of a nuclear power plant could be characterized as the ultimate form of "regulation of the construction and operation of . . . [a] utilization facility," an authority that petitioners argue is a far-ranging sphere of exclusive federal decision making. See part II B, *infra.*

[5]Similar concessions that Section 271 of the Atomic Energy Act preserves state authority over public utility rate-making and terms of service are found in the supporting briefs of Edison Electric Institute (Br. 6) and the Atomic Industrial Forum (Br. 23).

from the rate-payers[6]), which in turn requires that the safety, reliability and adequacy of the means of generation be thoroughly considered.[7]

In order to accomplish this task, it is self-evident that utility regulators must know what it is that is proposed, in reasonable engineering detail. State regulators have a distinct and independent need to know the cost of interim storage and long-term disposal of nuclear wastes, in advance of authorizing power generation by nuclear means. This distinct purpose, which has no overlap with the functions of the Nuclear Regulatory Commission and easily co-exists with them logically, is expressly preserved to the states in Section 271. *Cf. Huron Portland Cement Co. v. Detroit,* 362 U.S. 440, 444-448 (1960).[8]

---

[6]To our knowledge, it has nowhere been suggested that the costs of interim waste storage and permanent waste disposal are not properly considered part of the cost of power generation, and properly recoverable through the utility's rate structure. In its brief, the United States concedes that "it may be appropriate for the state to inquire, before issuing a certificate of public convenience and necessity for a new plant . . . what will be the costs of waste disposal." (Br. 24). In addition, the federal government appears to concede the relevance to that determination of the uncertainty of those costs. (Br. 22, n. 23).

[7]In this respect, Maine's statute provides that "every public utility is required to furnish safe, reasonable and adequate facilities" 35 Me.Rev.Stat. §51. This fundamental requirement, in the same or nearly identical formulation, is exceedingly common among the states. 1 A.J.G. Priest, *Principles of Public Utility Regulation,* 276 (1969).

[8]For the same reason, petitioners err in suggesting that the state statutes are preempted by the NRC's "waste confidence" determination (i.e. that new power plants may be licensed to operate in the absence of any approved waste disposal technology). While the federal agency's responsibility to assure the public safety and security may be satisfied by its confidence that safe and secure waste management facilities will be available when needed, *Minnesota v. NRC,* 602 F.2d 412 (D.C. Cir. 1979), the states must know how and where and when these wastes will be stored and disposed, in order to project their cost with any reasonable certainty. *Contrast Ray v. Atlantic Richfield Co.,* 435 U.S. 151 (1978).

In the face of these concessions and practical realities, petitioners take the position that Section 271 allows states to regulate only the electricity produced by nuclear power, from the point where it enters the utility's distribution system. (Pet. Br. 32; *see also* U.S. Br. 11). This interpretation, however, cannot accommodate the plain words of Section 271, which preserve state regulatory authority over not only the "sale" and "transmission" of electricity produced from atomic power, but its "generation" as well. With respect to nuclear power plants, the failure to acknowledge the continuing vitality of the same public utility regulatory authority that the states have historically exercised over all forms of electric power generation would strip Section 271 of any meaning whatsoever.

B. The Federal Power Reserved by Section 274(c) Does Not Overlap the State Authorities Preserved by Sections 274(k) and 271.

The Ninth Circuit held that Section 274(c) of the Atomic Energy Act, 42 U.S.C. § 2021(c), requires the NRC to retain regulatory control over the "construction and operation" of nuclear power plants and "the disposal" of nuclear waste, but found:

> no indication in Section 274 or elsewhere in the Atomic Energy Act of 1954 that Congress intended to preempt any state regulation other than that involving radiation hazards. On the contrary, section 274(k) specifically allows the states to regulate "for purposes other than protection against radiation hazards." The committee report explains that "[t]his subsection is intended to make it clear that the bill does not impair the state's authority to regulate activities of the AEC licensees for the manifold health, safety, and economic purposes other than radiation protection. S. Rep. No. 870, 86th Cong., 1st Sess... . (App. 33).

However, petitioners look to Section 274(c) as an affirmative, express mandate by Congress that the NRC should exclusively regulate the construction and operation of nuclear

power plants and the disposal of nuclear wastes, not only for purposes of protecting against radiation hazards, but for all purposes. Accordingly, petitioners and their supporting *amici* repeatedly characterize the California statutes as "regulation of the construction and operation" of nuclear power plants. The object of this characterization is to set the California statutes within the ambit of Section 274(c) of the Act, and simultaneously remove it from the spheres of authority expressly preserved to the States in Section 271 and 274(k). In so doing, petitioners seriously misconstrue both the California statutes and Section 274 to create a conflict of regulatory authority.

The California statutes under attack cannot be read to include directive or compulsory powers addressing the operation of nuclear power plants, or of waste disposal or interim storage facilities. Thus there is no dual system of regulation that might engender conflicting requirements, and thus the potential for preemption. *See, Ray v. Atlantic Richfield Co.,* 435 U.S. at 158. The California statutes appear to be addressed, as Maine's parallel laws are, to power plant certification—to the need for power and the cost of power proposed—and thus fall squarely within the scope of state public utility powers preserved under Section 271. To the extent that these statutes require a state agency to consider the construction, operation and waste disposal costs of nuclear power, they do so for an established public utility purpose, and thereby have the additional protection of the plain terms of Section 274(k).

As the Court of Appeals ruled, Section 274(c) cannot be read in isolation from Section 274(k). On its face, Section 274(c) is merely a *limit* on the authority of the NRC to delegate its regulatory authority to the states. But even assuming *arguendo* that the enactment of Section 274(c) gave preemptive force to federal actions within the spheres described, the preempted area is immediately and expressly limited by Section 274(k). By its language and legislative history, Section 274(k) leaves unaffected the historic authority of the states to "regulate activities" also regulated by the Nuclear Regulatory Commission, if the state is regulating "for purposes other than protection against radiation hazards." As Congress acknowledged,

this relationship pertains even though, as a result, the state may "deal [ ] with matters on the fringe of the preempted area."[9]

C. Any Federal Promotional Purpose Does Not Preempt Traditional State Public Utility Regulation.

As the Ninth Circuit has aptly said at greater length (A. 42-46), any promotional purpose attributed to the 1954 Congress[10] must take account of the plain meaning of Section 271. Petitioners' effort to elevate the general and hopeful promotional purposes of the Atomic Energy Act to the point of overriding the state regulatory authority expressly preserved by Section 271, and reinforced by Section 274(k), finds no support in the preemption analysis of this Court.

CONCLUSION

For the reasons stated above, the State of Maine urges this Court affirm the opinion of the Ninth Circuit Court of Appeals, and in so doing to clearly affirm that nuclear power generation is fully subject to the traditional certification and ratemaking jurisdiction of state public utility commissions, in accordance with the plain meaning of Sections 271 and 274(k) of the Atomic Energy Act.

---

[9]Hearings Before The Joint Committee On Atomic Energy on Federal-State Regulation in the Atomic Energy Field, 86th Cong., 1st Sess., p. 500.

[10]It is another question whether such an intention could be given equal force nearly three decades later, in the face of vastly increased technical knowledge and dramatically different economic and energy considerations. In any case, for reasons set forth in the text, that question need not be addressed.

Respectfully submitted,

STATE OF MAINE, *AMICUS CURIAE*

JAMES E. TIERNEY
Attorney General

RUFUS E. BROWN
Deputy Attorney General

H. CABANNE HOWARD*
Senior Assistant Attorney General

GREGORY W. SAMPLE
Assistant Attorney General

**Counsel of Record*

APPENDIX

MAINE REVISED STATUTES
TITLE 10
CHAPTER 4
REQUIREMENTS FOR CERTIFICATION OF NUCLEAR POWER PLANTS BY THE PUBLIC UTILITIES COMMISSION

Section

251. Definitions.
252. Requirements prior to certification of nuclear power plants by the Public Utilities Commission.
253. Power to certify.
254. Certification of nuclear power plants.
255. Commission action upon petition.
256. Commission action if power to grant certificates not granted.

§ 251. Definitions

As used in this chapter, unless the context otherwise indicates, the following words and phrases shall have the following meanings.

1. Commission. "Commission" means the Public Utilities Commission.

2. Construction. "Construction" means the installation of permanent equipment or structures.

3. High level nuclear wastes. "High level nuclear wastes" means those aqueous wastes resulting from the operation of the first cycle of the solvent extraction system or equivalent and the concentrated wastes of the subsequent extraction cycles or equivalent in a facility for reprocessing irradiated reactor fuel. High level nuclear wastes shall include spent fuel assemblies prior to fuel reprocessing.

4. Nuclear power plant. "Nuclear power plant" means a nuclear fission thermal power plant.

5. Technology or means for the disposal of high-level nuclear waste. "Technology or means for the disposal of high-level nuclear waste" means a method for the permanent and terminal disposal of high-level nuclear waste. It shall not necessarily require that facilities for the application of such technology and means be available at the time the commission makes its findings. Such disposition shall not necessarily preclude the possibility of an approved process for retrieval of such waste.

1977, c. 355.

§ 252. Requirements prior to certification of nuclear power plants by the Public Utilities Commission

No construction shall commence on a nuclear power plant after the effective date of this chapter until the Public Utilities Commission has complied with this chapter.

1977, c. 355.

§ 253. Power to certify

The commission shall not certify any nuclear power plant until the following condition is met.

1. Commission finding of United States identification and approval of technology. The commission finds that the United States Government, through its authorized agency, has identified and approved a demonstrable technology or means for the disposal of high-level nuclear waste.

1977, c. 355.

§ 254. Certification of nuclear power plants

If the conditions of section 253 have been met, the commission may certify a nuclear power plant if it finds that:

1. Waste storage facilities operational. Specific facilities with adequate capacity to contain high-level nuclear waste are in actual operation, or will be in operation, at the time the nuclear power plant being certified requires the means for the disposal of high-level nuclear waste; and

2. Proposal for disposal is in conformity. The disposal of high-level nuclear waste proposed for any nuclear power plant to be certified according to this chapter is in full conformity with the technology approved by the authorized agency of the United States Government.

1977, c. 355.

§ 255. Commission action upon petition

Upon petition of any person, firm or corporation, the commission shall within a reasonable time conduct public hearings and make specific findings as to the conditions set forth in section 253, subsection 1.

1977, c. 355.

§ 256. Commission action if power to grant certificates not granted

If the conditions of section 253 have not been met, the commission may continue to receive and process applications for certification but may not certify a nuclear power plant. Any other governmental entity which grants necessary permits, licenses, approvals or authorizations for construction of a nuclear power plant may process and grant those permits, licenses, approvals or authorizations, subject to the commission's granting of certification under this chapter.

1977, c. 355.

Amicus Brief

10

Office - Supreme Court, U.S.
FILED
NOV 2[illegible]
ALEXANDER L. STEVAS,
CLERK

No. 81-1945

IN THE
SUPREME COURT OF THE UNITED STATES

OCTOBER TERM, 1982

PACIFIC GAS AND ELECTRIC COMPANY
and
SOUTHERN CALIFORNIA EDISON COMPANY,

Petitioners,

v.

STATE ENERGY RESOURCES CONSERVATION
& DEVELOPMENT COMMISSION, et al.,

Respondents.

ON WRIT OF CERTIORARI TO THE UNITED
STATES COURT OF APPEALS FOR THE
NINTH CIRCUIT

BRIEF AMICUS CURIAE OF THE COMMONWEALTH OF MASSACHUSETTS IN SUPPORT OF RESPONDENTS

FRANCIS X. BELLOTTI
ATTORNEY GENERAL

*Stephen M. Leonard
JoAnn Shotwell
Assistant Attorneys General
Environmental Protection
Division
Public Protection Bureau
One Ashburton Place
Boston, Massachusetts 02108
(617) 727-2265

*Counsel of Record

TABLE OF CONTENTS

Page

I. INTRODUCTION AND STATEMENT OF INTEREST.....1

II. SUMMARY OF ARGUMENT.....5

III. ARGUMENT.....7

IV. CONCLUSION.....14

TABLE OF AUTHORITIES

Cases:

Lowell Gas Co. v. Department of Public Utilities, 319 Mass. 46, 64 N.E. 2d 640 (1946).....3

Natural Resources Defense Council v. NRC, ___F.2d.___, 17 ERC 1457 (D.C. Cir. 1982).....9

Re Western Massachusetts Electric Company, Mass. D.P.U. 18731 (April 8, 1977).....4

Constitutional Provisions:

Mass. Const. amend. art. 48, pt. 5, §1.....4

Statutes:

Atomic Energy Act of 1954, 42 U.S.C. 2021(k).....6, 13

Cal. Pub. Res. Code §25524.1(b) and 25524.2 (West 1977).....1

Mass. Gen. Laws Ann. ch. 30, §§61-62H.....3

Mass. Gen. Laws Ann. ch. 164, §14.....3

Mass. Gen. Laws Ann. ch. 164, §§69G-69S.....3

Mass. Gen. Laws Ann. ch. 164, §§93-94.....3

Miscellaneous:

42 Fed. Reg. 13803 (1977).....10

42 Fed. Reg. 44044 (1977).....8

44 Fed. Reg. 45362 (1979).....10

44 Fed. Reg. 61372 (1979).....9

Mass. House No. 5000,
1982 Sess. 4

I. INTRODUCTION AND STATEMENT OF INTEREST

Pursuant to Supreme Court Rule 36, the Commonwealth of Massachusetts, by its Attorney General, submits this brief amicus curiae in support of the position of respondents and urges affirmance of the decision of the court below. The Commonwealth is familiar with the briefs that have been or are to be filed by other states and specifically adopts the brief of the State of Wisconsin. Massachusetts submits this additional brief to address a particular argument that has been advanced by the United States. That argument is based on a fundamental misunderstanding about the nature of the judgments that underlie state enactments like California's Nuclear Laws, Cal. Pub. Res. Code §§25524.1(b) and 25524.2 (West 1977).

Massachusetts shares California's interest in preserving the traditional powers of states to regulate public utilities and, in particular, to protect ratepayers from unacceptable economic impacts of electric power generation. Like many other states, Massachusetts has exercised its traditional police powers to regulate the siting, construction and operation of electric generating plants, including those powered by nuclear energy, in order to protect its economy, its natural resources and the "mix" of generating facilities upon which it relies for electric energy. Under Massachusetts law, a utility seeking to construct and operate a nuclear power plant (or any other energy-generating facility) must satisfy a number of state agencies that the need for an additional generating facility

exists, that the adverse environmental impacts of its construction and operation are outweighed by its anticipated benefits and that the plant is the most economic and environmentally sound alternative. See Mass. Gen. Laws Ann. ch. 164, §§69G-69S (West 1976); Mass. Gen. Laws Ann. ch. 164, §14 (West 1976) (interpreted by the Massachusetts Supreme Judicial Court in Lowell Gas Co. v. Department of Public Utilities, 319 Mass. 46, 53, 64 N.E. 2d 640, 644 (1946), as authorizing disapproval by the Commonwealth's Department of Public Utilities of any proposed sale of utility stocks or bonds that it finds does not "meet the reasonable necessities of the business of the corporation"); Mass. Gen. Laws Ann. ch. 30, §§61-62H (West 1976). Furthermore, under Mass. Gen. Laws Ann. ch. 164,

§§93-94 (West 1976), the Department of Public Utilities must approve all rates charged by a utility to its customers. The inclusion of the costs of any new generating plant in a utility's rate base requires two findings: first, that the plant will be "used and useful"; and second, that the decision to build the plant was reasonable and prudent. Re Western Massachusetts Electric Company, Mass. D.P.U. 18731 (April 8, 1977).

More significantly for purposes of this case, on November 2, 1982, Massachusetts voters approved an initiative petition styled the "Nuclear Power and Waste Disposal Voter Approval and Legislative Certification Act," House No. 5000, 1982 Sess., which takes effect on December 2, 1982. Mass. Const. amend. art. 48, pt. 5, §1. That Act is similar to the California Nuclear Laws in that

it requires, inter alia, that there be in existence "an operating, federally licensed facility for the timely and economical permanent disposal of high level radioactive wastes generated by the proposed nuclear power plant . . ." before any new nuclear facility may be constructed in the Commonwealth. Thus, the Commonwealth of Massachusetts has a direct and substantial interest in the Court's ruling on the authority of states to protect their citizens from the economic risks associated with nuclear plant construction in the face of uncertainty about the availability of a means for safe waste disposal.

II. SUMMARY OF ARGUMENT

The United States argues that state measures such as California's Nuclear Laws necessarily derive from judgments made by the states about the need for a

permanent means of safe waste disposal to protect public health and about the likelihood that the necessary technology will be developed. Since such judgments are reserved to the Nuclear Regulatory Commission, the argument runs, the laws are invalid. But this erroneously attributes to state officials judgments that have in fact been made by the NRC and other federal authorities and, therefore, incorrectly places laws such as California's outside of the authority reserved to the states by the Atomic Energy Act of 1954 to regulate the construction and operation of nuclear power plants "for purposes other than protection against radiation hazards." 42 U.S.C. §2021(k) (1973). Protecting their citizens from the economic risks associated with constructing and operating nuclear power plants in the absence

of a means for disposing of nuclear wastes falls squarely within the authority reserved to states by the explicit terms of Section 2021(k).

III. ARGUMENT

The amicus curiae brief submitted by the State of Wisconsin contains a thorough discussion of the states' historic exercise of police powers to protect the economic interests of their citizens in connection with the construction and operation of electric generating facilities, including nuclear power plants. The United States does not contest as a general matter that such economic regulation is the province of the states; it argues instead that in this case the economic judgments that California has made in enacting its Nuclear Laws are themselves necessarily based on a safety judgment properly

reserved to the NRC -- namely, that the current lack of a means for safe waste disposal poses a risk of radiation hazards to the public. See Brief of the United States as Amicus Curiae Supporting Reversal [hereinafter, "Brief of the United States"] at 3, 22-26. The Government is simply incorrect in its assertion that California has independently made that safety judgment.

The need for a permanent means for disposing of high-level radioactive wastes to prevent radiation hazards is so self-evident as to make difficult the task of locating explicit pronouncements of that need by federal authorities. The NRC has, however, explained that "[t]he disposal of high-level nuclear wastes is one of the most important issues now facing Federal energy agencies." 42 Fed. Reg. 44044 (1977).

And a federal interagency report concludes:

> [I]f present and future generations are to be protected from potential biological damage, a way must be provided either to isolate [radioactive] waste from the biosphere for long periods of time, to remove it entirely from the earth, or to transform it into non-radioactive elements.

Interagency Review Group on Nuclear-Waste Management Report to the President, at 8-9 (TID - 29442, March, 1979), cited in Natural Resources Defense Council v. NRC, ____ F.2d ____, 17 ERC 1457, 1460-61 n.14 (D.C.Cir. 1982). And implicit in the NRC's conduct of a proceeding to assess the likelihood of safe disposal -- the so-called "waste confidence" proceeding, see 44 Fed. Reg. 61372 (1979) -- is a recognition of the need for such a capability.

The United States correctly observes that "the conflict in this case is not

about whether a demonstrated disposal technology exists . . . ." Brief of the United States at 12. It does not. The NRC has acknowledged that "there [are] gaps in the information needed for detailed assessment of waste management and disposal technology . . .", 42 Fed. Reg. 13803, 13805 (1977), and more specifically that "areas of uncertainty remain regarding both the likelihood of finding a site [for a permanent repository] and the probability that it will perform as expected." 44 Fed. Reg. 45362, 45368 (1979).

It is thus incorrect to say that California's Nuclear Laws, or the initiative law passed earlier this month by the people of Massachusetts, are based on an independent judgment about the need for disposal facilities to protect public health. The NRC and other

responsible federal authorities have determined that a permanent means of disposal is necessary to protect the public against radiation hazards, that no such means exists today, and that there is uncertainty about whether a means for safe disposal can be developed. The NRC, exercising its authority over radiation safety, has determined that plant licensing may continue in these circumstances. The State of California, like the Commonwealth of Massachusetts, exercising its authority over the economic impact of electric power generation, has determined that California ratepayers need additional protection from the potential economic consequences of a failure to develop the

necessary disposal technology.[1/] In so doing, California has regulated "for purposes other than protection against radiation hazards" in complete accord with the division of regulatory authority between the federal and state

---

1/ At times the United States' argument shifts slightly. Conceding implicitly that the NRC has determined that waste disposal is necessary and that its availability is uncertain, the United States appears to argue that California has impermissibly second-guessed the NRC's judgment about the likelihood of its availability. See Brief of the United States at 25. Even assuming that the NRC has the exclusive authority to assess this likelihood, it has not yet done so. The Commission is engaged in a rule-making proceeding whose purpose is to make that assessment. Id. In any case, California's and Massachusetts' actions are not based on their (independent) view of the likelihood that the problem will be resolved. They are based on the states' unwillingness to expose their ratepayers to the economic risks inherent in allowing construction and operation when the problem has not been resolved.

governments established by the Atomic Energy Act of 1954. 42 U.S.C. 2021(k) (1973).

By attributing to California judgments regarding the "threat of harm from radiation", Brief of the United States at 23, the United States attempts to portray the Nuclear Laws as something other than economic regulation. While we leave to California the task of explicating its statutory provisions, we challenge the apparent conclusion that any state measure that prohibits construction of nuclear plants pending development of a safe waste disposal technology necessarily derives from an independent, and hence impermissible, determination regarding radiological health and safety. And, if California has made any independent safety judgments, they are not those that the

United States cites, for those judgments were made by the NRC and other federal authorities.

We do not dispute that the task of protecting the public against radiation hazards has been reserved exclusively to the Nuclear Regulatory Commission. That premise simply does not support the conclusion that the United States draws from it. Accepting the NRC's safety-related judgments, states may nevertheless exercise their authority over the economics of power generation by conditioning the construction of new plants (nuclear or otherwise) on the demonstrated availability of a disposal technology for their byproducts.

IV. CONCLUSION

The United States' opposition to California's Nuclear Laws is premised on inaccurate characterizations of the

decisions of state authorities that necessarily underlie such laws and of the nature of the decisions that have been made by responsible federal authorities. We urge the Court to reject the arguments of the United States.

Respectfully submitted,

FRANCIS X. BELLOTTI
ATTORNEY GENERAL

Stephen M. Leonard
JoAnn Shotwell
Assistant Attorneys General
Environmental Protection
Division
Public Protection Bureau
One Ashburton Place
Boston, Massachusetts 02108
(617) 727-2265

November 22, 1982

Amicus Brief

11

MOTION
AUG 9 1982

NO. 81-1945

SUPREME COURT OF THE UNITED STATES

October Term, 1981

PACIFIC GAS AND ELECTRIC COMPANY AND SOUTHERN CALIFORNIA EDISON COMPANY,

Petitioners,

vs.

STATE ENERGY RESOURCES CONSERVATION AND DEVELOPMENT COMMISSION, et al.,

Respondents.

ON WRIT OF CERTIORARI TO THE UNITED STATES COURT OF APPEALS FOR THE NINTH CIRCUIT

MOTION OF NEW ENGLAND LEGAL FOUNDATION FOR LEAVE TO FILE BRIEF AS AMICUS CURIAE AND BRIEF OF AMICUS CURIAE, NEW ENGLAND LEGAL FOUNDATION, IN SUPPORT OF PETITIONERS.

Joseph D. Alviani
Marcia Drake Seeler
New England Legal Foundation
110 Tremont Street
Boston, Massachusetts 02108
(617) 482-1410
Counsel for Amicus Curiae

Jean M. DeLuca (On Brief)

NO. 81-1945

SUPREME COURT OF THE UNITED STATES

October Term, 1981

PACIFIC GAS AND ELECTRIC COMPANY AND SOUTHERN CALIFORNIA EDISON COMPANY,

Petitioners,

vs.

STATE ENERGY RESOURCES CONSERVATION AND DEVELOPMENT COMMISSION, et al.,

Respondents.

ON WRIT OF CERTIORARI TO THE UNITED STATES COURT OF APPEALS FOR THE NINTH CIRCUIT

MOTION OF NEW ENGLAND LEGAL FOUNDATION FOR LEAVE TO FILE BRIEF AS AMICUS CURIAE AND BRIEF OF AMICUS CURIAE, NEW ENGLAND LEGAL FOUNDATION, IN SUPPORT OF PETITIONERS.

Joseph D. Alviani
Marcia Drake Seeler
New England Legal Foundation
110 Tremont Street
Boston, Massachusetts 02108
(617) 482-1410
Counsel for Amicus Curiae

Jean M. DeLuca (On Brief)

MOTION OF NEW ENGLAND LEGAL FOUNDATION FOR LEAVE TO FILE A BRIEF AS AMICUS CURIAE

Pursuant to Rule 36.1 of the Rules of the Supreme Court, New England Legal Foundation moves the Court for leave to file its brief amicus curiae, bound with this motion, in support of petitioners.

New England Legal Foundation (NELF) is a non-profit, tax-exempt corporation organized under the laws of the Commonwealth of Massachusetts for the purpose of engaging in litigation on public interest matters. NELF represents the public interests of citizens in the six New England states in judicial and administrative proceedings which affect their economic rights and opportunities. Policy for NELF is formulated by a Board of Directors consisting of attorneys, businessmen, and educators. The Board, through its Legal Review Committee, all members of which are attorneys, evaluates the merits of any contemplated legal action and authorizes such action only when the position of the Foundation has broad support in the general community.

NELF has long been interested in the protection of the economic interests of businesses and individuals. When any

individual, any collection of individuals, or any corporate or other legal entity, chooses to engage in lawful economic conduct, it should be protected from restrictions imposed in violation of well established constitutional principles. NELF has been active in its opposition to such restrictions, most recently filing an amicus curiae brief in Kevin H. White v. Massachusetts Council of Construction Employers, Supreme Court No. 81-1003, opposing, on Commerce Clause and Privileges and Immunities Clause grounds, an attempt by the City of Boston to mandate a residents hiring preference which limits employment opportunitites for out-of-state construction workers. NELF also filed a brief in New England Power Co. v. New Hampshire Public Utilities Commission, _____ U.S. _____, 50 U.S.L.W. 4223 (2/24/82), arguing that the action of the New Hampshire Public Utilities Commission, in restricting the economic benefits of hydroelectric power generated in that state exclusively to New Hampshire customers, violated the Commerc and Supremacy Clauses of the Federal Constitution.

The Foundation has also been highly active in legal issues concerning the treatment and disposal of hazardous wastes. It has recently filed an amicus curiae brief in the Supreme Court of New Hampshire challenging the attempt by a local community to frustrate a state-wide plan for the proper treatment of hazardous waste by blocking the siting of a disposal facility in the town. Stablex Corporation v. Town of Hooksett, Supreme Court of New Hampshire, No. 82-220. Leave also has been granted to the Foundation to file an amicus curiae brief in a similar challenge to the Massachusetts siting statute. Town of Warren v. Massachusetts Site Safety Council, Superior Court of Worcester County, Massachusetts, No. 82-21740. In each of these matters, NELF's concern has been for a uniform, efficient and safe hazardous waste disposal program. In the instant matter, and for similar reasons, the Foundation opposes the type of local protectionism attempted by the State of California.

The New England Legal Foundation contends that the moratorium placed on the construction of new nuclear

power plants by the State of California violates the Supremacy Clause of the Constitution and threatens the development of technologically sound and environmentally safe disposal facilities for nuclear wastes. NELF's public interest perspective, combined with its broad experience in the constitutional and economic aspects of cases involving the proper role of the states in our federalist system, will provide this Court with a point of view not otherwise presented in the instant case. Amicus believes that it will present arguments, in opposition to the exercise of state jurisdiction over the field of nuclear waste disposal which will not be presented by the parties to this action or by other amici.

For the foregoing reasons, New England Legal Foundation prays that this Court grant its motion for leave

to file the accompanying brief amicus curiae in support of the Petitioner.

By its Attorneys,

Joseph D. Alviani, Esquire
New England Legal Foundation

Marcia Drake Seeler, Esquire
New England Legal Foundation
110 Tremont Street
Boston, Massachusetts 02108
(617) 482-1410

TABLE OF CONTENTS

TABLE OF AUTHORITIES iii

ISSUES PRESENTED FOR REVIEW 2

INTEREST OF AMICUS 3

STATEMENT OF THE CASE 6

SUMMARY OF ARGUMENT 10

ARGUMENT

I. A STATE MAY NOT INTRUDE INTO A PREEMPTED SPHERE OF ACTIVITY UNDER THE GUISE OF A NON-PREEMPTED PURPOSE 14

II. THE CALIFORNIA NUCLEAR MORATORIUM ON THE CONSTRUCTION OF NEW NUCLEAR POWER PLANTS IS PREEMPTED BY THE ATOMIC ENERGY ACT 17

A. Preemption May Be Expressed, Implied or Inferred 17

B. The Atomic Energy Act Specifically Preempts State Regulation of Radiation Hazards 19

C. The Federal Government Has Expressly Preempted All Regulatory Authority Over the Disposal of Nuclear Wastes 23

D. The Nuclear Moratorium Conflicts With Federal Regulation Over Nuclear Wastes 27

E. The Disposal of Nuclear Waste Is a Matter of Such National Concern That Its Implementation May Not Be Impeded By the Individual States 31

CONCLUSION 36

TABLE OF AUTHORITIES

Cases

Edgar v. MITE Corporation, ____ U.S. _____, 50 U.S.L.W. 4767 (June 22, 1982) 12

Florida Lime & Avocado Growers, Inc., v. Paul, 373 U.S. 132 (1963) 18,27

Harris County, Texas v. United States, 292 F. 2d 370 (5th Cir. 1961) 24

Hines v. Davidowitz, 312 U.S. 52 (1941) 11,18,27

Illinois v. General Electric Co., ___ F. 2d ___, 51 U.S.L.W. 2055 (7/27/82), (digest of opinion) 25

Illinois v. Kerr-McGee Chemical Corp., 677 F. 2d 571 (7th Cir. 1982) 10,22

Jones v. Rath Packing Co., 430 U.S. 519 (1977) .. 17,19

Nash v. Florida Industrial Comm'n., 389 U.S. 235 (1967) 19

Natural Resources Defense Council, Inc. v. United States Nuclear Regulatory Comm'n., 582 F. 2d 166 (2d Cir. 1978) 22,23,30

New England Power Co. v. New Hampshire Public Utilities Comm'n., ____ U.S. ____, 50 U.S.L.W. 4223 (February 24, 1982) 4

Northern States Power Co. v. Minnesota, 447 F. 2d 1143 (8th Cir. 1971), aff'd mem., Minnesota v. Northern States Power Co., 405 U.S. 1035 (1972) 21

Pacific Legal Foundation v. State Energy Resources Conservation and Development Comm'n., 472 F. Supp. 191 (S.D. Cal. 1972) 9

Pacific Legal Foundation v. State Energy Resources Conservation and Development Comm'n., 659 F. 2d 903 (9th Cir. 1981) 9,14,22
..... 23,27

Perez v. Campbell, 402 U.S. 637 (1971) 13,16

Ray v. Atlantic Richfield Co., 435 U.S. 151 (1978) 17,19

Rice v. Santa Fe Elevator Corp., 331 U.S. 218 (1947) 17,18,32

Stablex Corp. v. Town of Hooksett, Supreme Court of New Hampshire, No. 82-220 (1982) 5

Town of Warren v. Massachusetts Site Safety Council, Superior Court of Worcester County, Massachusetts, No. 82-21740 (1982) 5

United States v. City of New York, 463 F. Supp. 604 (S.D. N.Y. 1978) 22

White v. Massachusetts Council of Construction Employers, Supreme Court No. 81-1003 4

Constitutional, Statutory, and Regulatory Provisions

United States Constitution
Supremacy Clause, Article VI, cl. 2 8,17

Atomic Energy Act of 1946, ch. 274, 60 Stat. 755, 42 U.S.C. §1801, et seq. 6,10

Atomic Energy Act of 1954,
42 U.S.C. §2011 et seq. 2,6,19
..... 20,29
42 U.S.C. §2012(a) 15
42 U.S.C. §2013(d) 29

42 U.S.C. §2021 6
42 U.S.C. §2021(c)(1) 7,10,21
..... 25
42 U.S.C. §2021(c)(4) 24
42 U.S.C. §2021(k) 7,9,14
..... 21,25

Energy Reorganization Act of 1974,
42 U.S.C. §5801 et seq. 30
42 U.S.C. §5814 20

28 U.S.C. §1331(d) 8
28 U.S.C. §1337 8
10 C.F.R. Part 72 28
10 C.F.R. 72.6 28

Warren-Alquist State Energy Resources
Conservation and Development Act,
Cal. Pub. Res. Code §25000 et seq.
(West 1977 & Cum. Supp. 1982) 7,9
Section 25524.1(b) (West 1977) 2
Section 25524.2 (West 1977) 2,7

Legislative History

S. Rep. No. 1699, 83rd Cong., 2d Sess., reprinted
in [1954] United States Code Cong. & Ad.
News 3456 11

S. Rep. No. 870, 86th cong. 1st Sess., reprinted
in [1959] United States Code Cong. & Ad.
News 2872 6

NO. 81-1945

SUPREME COURT OF THE UNITED STATES

October Term, 1981

PACIFIC GAS AND ELECTRIC COMPANY AND SOUTHERN CALIFORNIA EDISON COMPANY,

Petitioners,

vs.

STATE ENERGY RESOURCES CONSERVATION AND DEVELOPMENT COMMISSION, et al.,

Respondents.

ON WRIT OF CERTIORARI TO THE UNITED STATES COURT OF APPEALS FOR THE NINTH CIRCUIT

MOTION OF NEW ENGLAND LEGAL FOUNDATION FOR LEAVE TO FILE BRIEF AS AMICUS CURIAE AND BRIEF OF AMICUS CURIAE, NEW ENGLAND LEGAL FOUNDATION, IN SUPPORT OF PETITIONERS.

Joseph D. Alviani
Marcia Drake Seeler
New England Legal Foundation
110 Tremont Street
Boston, Massachusetts 02108
(617) 482-1410
Counsel for Amicus Curiae

Jean M. DeLuca (On Brief)

ISSUE PRESENTED FOR REVIEW

1. Are the provisions in the 1976 Amendment to California's Warren-Alquist Act, Cal. Pub. Res. Code §25524.1(b) and 25524.2, which place a moratorium on the construction of nuclear power plants until the State Energy Resources Conservation and Development Commission determines that there are federally approved technologies for the storage and disposal of nuclear wastes, impermissibly in conflict with, and preempted by, the Atomic Energy Act of 1954, as amended?

INTEREST OF AMICUS CURIAE

New England Legal Foundation (NELF) is a non-profit, tax-exempt corporation organized under the laws of the Commonwealth of Massachusetts for the purpose of engaging in litigation on public interest matters. NELF represents the public interests of citizens in the six New England states in judicial and administrative proceedings which affect their economic rights and opportunities. Policy for NELF is formulated by a Board of Directors consisting of attorneys, businessmen, and educators. The Board, through its Legal Review Committee, all members of which are attorneys, evaluates the merits of any contemplated legal action and authorizes such action only when the position of the Foundation has broad support in the general community.

NELF has long been interested in the protection of the economic interests of businesses and individuals. When any individual, any collection of individuals, or any corporate or other legal entity, chooses to engage in lawful economic conduct, it should be protected from restrictions imposed in

violation of well established constitutional principles. NELF has been active in its opposition to such restrictions, most recently filing an amicus curiae brief in Kevin H. White v. Massachusetts Council of Construction Employers, Supreme Court No. 81-1003, opposing, on Commerce Clause and Privileges and Immunities Clause grounds, an attempt by the City of Boston to mandate a residents hiring preference which limits employment opportunitites for out-of-state construction workers. NELF also filed a brief in New England Power Co. v. New Hampshire Public Utilities Commission, _____ U.S. _____, 50 U.S.L.W. 4223 (2/24/82), arguing that the action of the New Hampshire Public Utilities Commission, in restricting the economic benefits of hydroelectric power generated in that state exclusively to New Hampshire customers, violated the Commerc and Supremacy Clauses of the Federal Constitution.

The Foundation has also been highly active in legal issues concerning the treatment and disposal of hazardous wastes. It has recently filed an amicus curiae brief in

the Supreme Court of New Hampshire challenging the attempt by a local community to frustrate a state-wide plan for the proper treatment of hazardous waste by blocking the siting of a disposal facility in the town. Stablex Corporation v. Town of Hooksett, Supreme Court of New Hampshire, No. 82-220. Leave also has been granted to the Foundation to file an amicus curiae brief in a similar challenge to the Massachusetts siting statute. Town of Warren v. Massachusetts Site Safety Council, Superior Court of Worcester County, Massachusetts, No. 82-21740. In each of these matters, NELF's concern has been for a uniform, efficient and safe hazardous waste disposal program. In the instant matter, and for similar reasons, the Foundation opposes the type of local protectionism attempted by the State of California.

The New England Legal Foundation contends that the moratorium placed on the construction of new nuclear power plants by the State of California violates the Supremacy Clause of the Constitution and threatens the development of technologically sound and environmentally safe disposal facilities for nuclear wastes.

STATEMENT OF THE CASE

The Atomic Energy Act of 1954, 42 U.S.C. §§2011, et seq., ended the governmental monopoly in atomic energy created by the Act of August 1, 1946, formerly at 42 U.S.C. §§1801, et seq., and paved the way for the private sector's participation in the development of nuclear power. In 1959 the Act was amended to expand the role of the states in the regulation of hazards associated with the production of nuclear energy. 42 U.S.C. §2021. The amendments were intended to "encourage States to increase their knowledge and capacities, and to enter into agreements to assume regulatory responsibilities over [nuclear] materials." S. Rep. No. 870, 86th Cong., 1st Sess., reprinted in [1959] U.S. Code Cong. & Ad. News 2872, 2878-79. The bill did not, however, intend to confer dual or concurrent jurisdiction by a state and the Atomic Energy Commission (now the Nuclear Regulatory Commission) in the control of radiation hazards. The authority to regulate aspects of nuclear energy development was specifically conferred upon the states, while other aspects were retained under the

separate authority of the federal government. Yet, while the federal government gradually has been relinquishing some of its authority to regulate in the area of nuclear energy, it has consistently retained exclusive authority to regulate "the construction and operation of any production or utilization facility," 42 U.S.C. §2021(c)(1). It permits states to regulate only "for purposes other than protection against radiation hazards." 42 U.S.C. §2021(k).

Claiming authority under that provision, the State of California in 1976 amended the Warren-Alquist State Energy Resources Conservation and Development Act, Cal. Pub. Res. Code §§25000, et seq., to include several provisions, collectively known as the Nuclear Laws, which together impose a moratorium on the construction of new nuclear power plants within the state. The Nuclear Laws prohibit the construction of such plants unless the California State Energy Commission finds that there exists a nationally accepted and demonstrated technology for the disposal of high-level nuclear waste. Cal. Pub. Res. Code §25524.2. Because no such national disposal plan exists, the State

disposal plan exists, the State Energy Commission is unable to make the necessary findings which are a prerequisite to licensing the construction of new nuclear power plants. Thus, California has effectively frustrated the federal policy of promoting the private development of nuclear power by imposing a precondition nowhere found in the relevant federal statutes or delegations of authority to the states.

Petitioners, Pacific Gas and Electric Company ("PG and E") and Southern California Edison Company ("Edison"), filed a claim for declaratory relief in the United States District Court for the Eastern District of California, invoking jurisdiction pursuant to 28 U.S.C. §§1331(d) and 1337. Plaintiffs alleged that the Nuclear Laws and 16 other sections of the Warren-Alquist Act were in violation of the Supremacy Clause, Art. VI, cl. 2, and thus unconstitutional. Plaintiffs contended that the California statutes were preempted by the Atomic Energy Act, which placed all regulation for purposes of protection against radiation hazards under federal authority. The District Court granted

Plaintiffs' motion for summary judgment on the issue of preemption. A trial, limited specifically to the issue of standing, was conducted and the court concluded that the utilities had standing to sue.

On appeal to the Ninth Circuit, the case was consolidated with Pacific Legal Foundation v. State Energy Resources Conservation and Development Commission, 472 F. Supp. 191 (1972). The Circuit Court reversed, holding that while the utilities had standing to sue, challenges to most of the provisions of the Warren-Alquist Act were not ripe for review. Pacific Legal Foundation v. State Energy Resources Conservation and Development Commission, 659 F. 2d 903, 916-918 (9th Cir. 1981). The court went on, however, to address the merits of §25524.2. Id. 918. While acknowledging that states are preempted from regulating for protection from radiation hazards, the court interpreted Section 274(k) of the Atomic Energy Act, 42 U.S.C. §2021(k), as granting California the authority to regulate the disposal of waste for non-radiation hazard reasons, namely economic concerns. Since the Court failed to

identify any direct conflict between the state statute and the Atomic Energy Act, it upheld the moratorium as a valid exercise of state authority. Id. at 928.

SUMMARY OF ARGUMENT

The question before this Court is whether a state imposed moratorium on the construction of new nuclear power plants, pending the fulfillment of a pre-condition which neither the state nor a project applicant has the authority to achieve, is invalid because it is impermissibly in conflict with, and therefore preempted by, the Atomic Energy Act of 1954, as amended.

The Act expressly states that "the Commission shall retain authority and responsibility with respect to regulation of (1) the construction and operation of any production or utilization facility." 42 U.S.C. §2021(c)(1). This authority has been recognized consistently to be within the exclusive domain of the Commission and to encompass the regulation of all elements that are integral factors in the construction and operation processes. Illinois v. Kerr-McGee Chemical Corporation, 677 F. 2d 571 (7th Cir. 1982). The safe and

proper disposal of any residue that is created as a consequence of the usual operations of a nuclear plant is an integral part of the operation process and, thus, is within the exclusive authority of the Commission. The attempt by the State of California to regulate the disposal of nuclear waste, through the imposition of a moratorium, is expressly preempted by the Act and therefore invalid.

Further, even if the issue of waste disposal is not found to be expressly preempted by the Act, the state-imposed moratorium "stands as an obstacle to the accomplishment and execution of the full purposes and objectives of Congress." Hines v. Davidowitz, 312 U.S. 52, 67 (1941). The purpose of the Atomic Energy Act of 1954 — to encourage and promote private participation in the development of nuclear power in order to maximize its contribution to the welfare of the nation, S. Rep. No. 1699, 83rd Cong., 2d Sess., reprinted in [1954] U.S. Code Cong. & Ad. News 3456, 3464-65 — is frustrated completely by the moratorium on the construction of nuclear plants. The state statute is, as a result, in direct conflict with the federal

act, and is void under the Supremacy Clause, Art. VI, cl. 2. Edgar v. MITE Corporation, ___ U.S. ____, 50 U.S.L.W. 4767, 4768 (June 22, 1982).

The disposal of hazardous waste is becoming increasingly recognized as a problem of grave concern, with serious environmental, social and economic consequences. It is the paradigm of a problem which requires a uniform national solution, not a variegated state-by-state ad hoc approach. To ratify the conduct of California in this matter would be to encourage other states to abandon the difficult task of developing a safe means of disposing of nuclear waste for the simple solution of banning what is a vital component of a national plan for energy self-sufficiency.

While the State of California argues that the purpose behind the enactment of the Nuclear Laws is the assurance of economically efficient energy supplies, and not protection from radiation hazards, it is the effect of the statute, and not merely its articulated purpose, which places it in conflict with the accomplishment of federal objectives. When the result of a state's action is to endanger the

achievement of a federally declared national policy and frustrate the implementation of a uniform plan for the disposal of nuclear waste, a court must look beyond the declared purpose of the action and evaluate whether the result of the statute violates Aticle VI, cl. 2 of the Federal Constitution. Perez v. Campbell, 402 U.S. 637 (1971).

Congress has declared that the encouragement of the private development of atomic power is a goal beneficial to the nation as a whole. While this endeavor necessarily creates hazards, the federal government has specifically retained for itself the authority to determine whether those hazards are being adequately and properly regulated. The attempt by the State of California to regulate radiation hazards, through the imposition of a moratorium on nuclear power plant construction, must be invalidated as a violation of the Supremacy Clause.

ARGUMENT

I. A STATE MAY NOT INTRUDE INTO A PREEMPTED SPHERE OF ACTIVITY UNDER THE GUISE OF A NON-PREEMPTED PURPOSE.

The Ninth Circuit decision upholding the California nuclear moratorium was based upon 42 U.S.C. §2021(k), which provides that:

> Nothing in this section shall be construed to affect the authority of any state or local agency to regulate activities for purposes other than protection against radiation hazards.

Accordingly, the Court reasoned that since the stated purpose of the moratorium was economic — namely to insure that the citizens of California would not have to bear the financial risk of funding nuclear power plants which might subsequently be forced to terminate operations because of inadequate permanent waste disposal facilities — and not the safety of citizens from potential radiation hazards, the moratorium was not in conflict with the provisions of the Atomic Energy Act, and therefore, not preempted. Pacific Legal Foundation, v. 659 F. 2d at 925.

The decision of the Ninth Circuit is founded only upon an exceedingly broad interpretation of section 2021(k). Under this liberal analysis of the statute a state may, by carefully tailoring the stated legislative purpose of the enactment, nullify the comprehensive scheme imposed by Congress for the control and regulation of nuclear power, despite the actual and reasonably identifiable purpose, and the inevitable effect, of the state law. It is scarcely credible that Congress, which prefaced the Atomic Energy Act with a declaration that the "development, utilization, and control of atomic energy for military and for all other purposes are vital to the common defense and security," 42 U.S.C. §2012(a) intended to provide a state with a ready mechanism with which to prohibit or restrain the utilization of atomic energy.

Not only does the Court's reasoning defy logic in the context of the comprehensive regulatory scheme provided by the Atomic Energy Act, but it also threatens the basic premises underlying the doctrine of preemption. It is an elementary principle of judicial review that state

legislation, the thrust of which is specifically either preempted by or unavoidably in conflict with federal law, cannot be redeemed by a state legislature's declaration of some otherwise valid state purpose. As this court stated in Perez, 402 U.S. at 652,

> "(W)e can no longer adhere to the aberrational doctrine of Kesler and Reitz that state law may frustrate the operation of federal law as long as the state legislature in passing its law had some purpose in mind other than one of frustration. Apart from the fact that it is at odds with the approach taken in nearly all our Supremacy Clause cases, such a doctrine would enable state legislatures to nullify nearly all unwanted federal legislation by simply publishing a legislative committee report articulating some state interest or policy — other than frustration of the federal objective — that would be tangentially furthered by the proposed state law."

Thus, to determine whether the California Nuclear Laws are preempted by the Atomic Energy Act, it is necessary to look beyond the legislative purpose publicly enunciated by the state so that the true intent and effect of the enactment can be ascertained. That is, does the nuclear moratorium intrude, directly or indirectly, into a sphere preempted by the federal government?

II. THE CALIFORNIA NUCLEAR MORATORIUM ON THE CONSTRUCTION OF NEW NUCLEAR POWER PLANTS IS PREEMPTED BY THE ATOMIC ENERGY ACT.

A. Preemption May Be Express, Implied or Inferred.

The doctrine of federal preemption of state authority has its origin in the "Supremacy Clause" of Article VI, cl. 2 of the Constitution, which declares that:

> This Constitution, and the Laws of the United States, which shall be made in pursuance thereof...shall be the Supreme Law of the Land...any thing in the Constitution or Laws of any State to the Contrary notwithstanding.

The analysis of preemption under the Supremacy Clause begins with the assumption that the traditional state police power is not to be superseded unless such was the clear and manifest intent of Congress. Ray v. Atlantic Richfield Co., 435 U.S. 151, 157 (1978); Jones v. Rath Packing Co., 430 U.S. 519 (1977); Rice v. Sante Fe Elevator, 331 U.S. 218 (1947). Congress may evidence its preemptive intent in any of several ways. The most straighforward case occurs when Congress has expressly stated, either in a federal statute or its legislative history, that regulation by the federal

government is intended to be exclusive. Preemption may also occur when a scheme of regulation is so pervasive as to make reasonable the inference that no room was intended to remain for supplementation by the states, or when a statute governs an area of activity in which the federal interest is so dominant that it is presumed to preclude state regulation of the same activity. Rice v. Sante Fe Elevator Co., 331 U.S. at 230.

Even if Congress has not completely foreclosed the exercise of state authority in a particular field, a state statute regulating the area is void to the extent that it actually conflicts with federal law. This conflict will occur "where compliance with both federal and state regulations is a physical impossibility...." Florida Lime & Avocado Growers, Inc. v. Paul, 373 U.S. 132, 142, 143 (1963), or where the state "law stands as an obstacle to the accomplishment and execution of the full purpose and objectives of Congress." Hines, 312 U.S. at 67. State action must be invalidated, therefore, if its effect is to discourage or prohibit conduct that federal action is intended to

encourage, Nash v. Florida Industrial Commission, 389 U.S. 235, 239 (1967), or if it encourages or mandates conduct whose absence would aid in the effectuation of the federal scheme. Jones v. Rath Packing Co., 430 U.S. at 526. Courts, therefore, look not only to the precise language of a statute, but also to the scope and pattern of the legislation in order to determine its preemptive effect. Ray v. Atlantic Richfield, 435 U.S. at 163.

B. The Atomic Energy Act Specifically Preempts State Regulation of Radiation Hazards.

The preliminary question in preemption analysis is whether Congress expressly or impliedly reserved to the federal government the authority to operate in an area in which a state purports to act. That is, did Congress, in enacting the Atomic Energy Act, 22 U.S.C. §§2011, et seq. expressly or impliedly prohibit the State of California from imposing a ban on the construction of new nuclear power plants until such time as the State Energy Commission has determined that there exists a demonstrated technology or means for the disposal of high-level nuclear wastes?

Although the federal government originally assumed exclusive control over all matters relating to nuclear materials and facilities,[1] this monopoly ended with the Atomic Energy Act of 1954. That Act authorized and encouraged private industry, under regulation by the Atomic Energy Commission, to participate in the development of nuclear power. 42 U.S.C. §§2011, et seq. In 1959 Congress further amended the Act by adding a new section which established procedures for the assumption of regulatory authority by the states over some aspects of nuclear power, provided that individual states entered into an agreement with the Atomic Energy Commission[2] (hereinafter the Commission).

While it is conceded that limited authority was granted to the states by this amendment, it is also clear that the statute specifically delineated the areas in which

---

[1]Atomic Energy Act of 1946, Ch. 274, 60 stat. 755.

[2]The AEC was dismantled by section 104 of the Energy Reorganization Act of 1974, 42 U.S.C. §5814, and its regulatory functions were transferred to the Nuclear Regulatory Commission.

the Commission retained its exclusive control. Thus,

> No agreement entered into pursuant to subsection (b) shall provide for the discontinuance of any authority and responsibility with respect to regulation of (1) the construction and operation of any production or utilization facility. 42 U.S.C. §2021(c).

Similarly, while 42 U.S.C. §2021(k) preserves pre-existing state regulatory authority, it does so only for those regulations which are "for purposes other than protection against radiation hazards."

The preemptive scope of 42 U.S.C. §2021(c) and (k) has been extensively analyzed by various courts. In the seminal case of Northern States Power Company v. Minnesota, 447 F. 2d 1143 (8th Cir. 1971), aff'd. mem., Minnesota v. Northern States Power Company, 405 U.S. 1035 (1972), the State of Minnesota attempted to regulate radioactive waste disposal by establishing rigorous standards for radioactive liquid and gaseous discharges from nuclear power plants licensed by the Commission. In rejecting the state's argument that 42 U.S.C. §2021(c) and (k) did not preempt dual state and federal regulation of the discharge of

effluents from nuclear facilities, the court emphasized that "the whole tone of the 1959 amendment, upon examination of the statutory language alone, demonstrates Congressional recognition that the Commission at that time possessed the sole authority to regulate radiation hazards associated with by-product, source, and special nuclear materials and with production and utilization facilities." Id. at 1149. The view that the Commission has exclusive, non-delegated regulatory authority over the construction and operation of nuclear facilities and the protection of the public from radiation hazards has been reaffirmed by every court which has addressed the issue, including the Ninth Circuit in the decision which is the subject of this appeal. See, Illinois v. Kerr-McGee Chemical Corporation, 677 F. 2d 571 (7th Cir. 1982); Pacific Legal Foundation v. State Energy Resources Conservation & Development Commission, 659 F. 2d 903 (9th Cir. 1981); Natural Resources Defense Council, Inc. v. United States Nuclear Regulatory Commission, 582 F. 2d 166 (2nd Cir. 1978); United States v. City of New York, 463 F. Supp. 604 (S.D. N.Y. 1978).

C. The Federal Government Has Expressly Preempted All Regulatory Authority Over the Disposal of Nuclear Wastes.

While the Ninth Circuit, in Pacific Legal Foundation, acknowledged that the federal government has exclusive jurisdiction over matters pertaining to "radiation hazards" and the construction and operation of nuclear power facilities, the Court simply neglected to undertake any inquiry into or analysis of the crucial question of whether matters relating to the disposal of nuclear waste fall within the type of activity specifically preempted by the Atomic Energy Act. Quite simply, is nuclear waste an integral aspect of the construction and operation of nuclear power plants, and do these wastes pose a radiation hazard?

Although the term "radiation hazard" is not defined by Congress in the statute, common sense alone dictates that this phrase must encompass any activity, process, or facility which could pose a risk, danger, or peril of exposure to highly toxic radioactive material. There can be no dispute that nuclear facilities generate nuclear waste which is highly radioactive. See, discussion in Natural Resources

Defense Council, 582 F. 2d at 168. Likewise, it is now common knowledge that the improper or negligent disposal of nuclear wastes would create a risk, or peril, that the public and the environment would be exposed to dangerously toxic radioactive material.

Because of the national implications of improper nuclear waste disposal and its attendant dangers, Congress has not only retained general control over the regulation of radiation hazards for federal authorities, but has also specifically reserved for those federal agencies the licensing power over the disposal of nuclear by-products, sources, or special nuclear materials. 42 U.S.C. §2021(c)(4).

That nuclear wastes fall under subsection (4) was decided shortly after the 1959 amendments were enacted. In a challenge to the Commission's authority to designate a licensee and location for the handling of radicactive waste materials, the Fifth Circuit reviewed the question of whether the term "by-product" in the Atomic Energy Act encompasses nuclear wastes. Harris County, Texas v.

United States, 292 F. 2d 370 (5th Cir. 1961). The court summarily disposed of the issue, stating, "(W)e think it sufficient to say,...that the appellant has taken too narrow a view of the term 'by-product' as used in the statute, and that it is quite clear that the waste in question here is a 'by-product,' within the statutory meaning, and that the Commission has general authority to deal with such products and issue licenses in respect to them." Id. at 371. Similarly, the Seventh Circuit Court of Appeals has also recently concluded that matters relating to the storage and shipment of spent nuclear fuel are within the scope of the Atomic Energy Act. Illinois v. General Electric Co., ____ F. 2d ____, 51 U.S.L.W. 2055 (7/27/82), (digest of opinion).

Congress has, therefore, not only preempted all regulatory authority over general radiation hazards, but has also specifically identified nuclear wastes as one of the several areas in which the Commission is prohibited from delegating responsibility to the states. Indeed, if the disposal of nuclear wastes did not pose a radiation hazard identifiable under 42 U.S.C. §2021(c)(4) and (k), the State of

California simply would have no reason, economic or safety-related, to place a moratorium on the construction of nuclear plants pending appropriate resolution of the nuclear waste disposal issue. If nuclear wastes did not pose a radiation hazard, they could be disposed of in any landfill or other appropriate facility. Thus, absent the radiation factor, with its attendant hazards to public health and safety, and its creation of the economic problems of stockpiling, storage gluts, and potential obolescence, reasons for the California moratorium would not even exist. Consequently, if nuclear wastes do not pose a radiation hazard the rationale for the California moratorium evaporates. If, on the other hand, nuclear wastes are acknowledged to pose radiation hazards, the Atomic Energy Act has specifically retained federal control over the regulation of the disposal of such wastes, and any state action which conflicts with the federal regulation must fail in the face of the Supremacy Clause.

D. The Nuclear Moratorium Conflicts With Federal Regulation Over Nuclear Wastes.

As the Ninth Circuit itself acknowledged, "(S)tate regulations which directly conflict with regulations of the NRC would, of course, be preempted even if they were enacted for purposes other than protection against radiation hazards." Pacific Legal Foundation, 659 F. 2d at 922, n. 29. What the Ninth Circuit failed to recognize is that such a conflict may occur not only "where compliance with both federal and state regulations is a physical impossibility," Florida Lime & Avocado Growers, 373 U.S. at 142-143, but also where the state "law stands as an obstacle to the accomplishment and execution of the full purposes and objectives of Congress." Hines, 312 U.S. at 67. The California moratorium presents both types of conflicts. It not only directly conflicts with the federal regulations, making compliance with both an impossibility, but also imposes an obstacle to the accomplishment and execution of the objectives of Congress.

Federal regulations promulgated by the Commission specifically address the nuclear waste issue. Thus, pursuant

to 10 C.F.R. Part 72, the Commission will license a facility provided that spent fuel generated by the facility is stored either on the site or in a licensed independent spent fuel installation meeting specified siting and design criteria. Furthermore, because no permanent disposal facility has yet been licensed, any attempt to dispose of high-level nuclear waste is prohibited. 10 C.F.R. 72.6. Even though the federal government permits the construction and operation of new nuclear plants pending a permanent solution to the disposal of the nuclear waste problem, the State of California absolutely prohibits such construction until a permanent solution is not only approved by the federal government but is also deemed acceptable to the state. No conflict between state and federal law could be drawn more clearly. It is a physical impossibility for a company which has complied with the regulations of, and has been licensed by the NRC, to construct a facility since such construction is prohibited by state law.

Futhermore, the California moratorium stands as an obstacle to the execution of the objectives of Congress. In

enacting the Atomic Energy Act, Congress declared that, "Atomic Energy is capable of application for peaceful purposes.... (T)he development, use and control of atomic energy shall be directed so as to make the maximum contribution to the general welfare...." 42 U.S.C. §2011. In furtherance thereof, the Atomic Energy Act is to provide for "a program to encourage widespread participation in the development and utilization of atomic energy for peaceful purposes to the maximum extent consistent with the common defense and security and with the health and safety of the public...." 42 U.S.C. §2013 (d). While the stated Congressional purpose in enacting the Atomic Energy Act is the development, utilization and expansion of atomic energy, the purpose behind the California moratorium is decidedly the opposite. No action by a state, short of closing down presently operating plants, could more effectively obstruct the Congressional policy of encouraging nuclear energy development than a ban, for an indeterminate period of time, on the construction of new plants.

Moreover, Congress has already considered the issue of the disposal of nuclear waste and has determined that nuclear energy development should proceed even though a permanent solution to waste disposal has yet to be discovered. As the Second Circuit acknowledged, by the enactment of the Energy Reorganization Act of 1974, 42 U.S.C. §§5801, et seq., "Congress expressly recognized and impliedly approved NRC's regulatory scheme and practice under which the safety of interim storage of high-level radioactive wastes at commercial nuclear power sites has been determined separately from the safety of government-owned permanent storage facilities which have not, as yet, been established." Natural Resources Defense Council, 582 F.2d. at 174. Thus, in the Energy Reorganization Act, Congress affirmed its objective of continuing the development of nuclear energy while simultaneously developing the technology and facilities for the disposal of nuclear waste. This express Congressional intent is totally rejected by the independent determination of the State of California that no further atomic energy development

should occur until such time as the state determines, not only that the technology for safe nuclear waste disposal exists, but also that a facility utilizing this technology is operational and effective. This direct confrontation between Congressional purpose and state action illustrates the very necessity for the preemption doctrine. Where the conduct of a state, for whatever purpose, such as California's moratorium, so totally frustrates and obstructs the implementation of federal policy, the state action must give way to the supreme law of the land. The wisdom of the national purpose, in these instances, overcomes the whimsy of limited state motivations.

E. The Disposal of Nuclear Waste Is a Matter of Such National Concern That its Implementation May Not Be Impeded By the Individual States.

Even in the absence of a Congressional declaration that federal regulation is intended to be exclusive, federal preemption may be evidenced when an "Act of Congress [touches] a field in which the federal interest is so dominant that the federal system will be assumed to preclude enforcement of state laws on the same

subject...(L)ikewise, the object sought to be obtained by the federal laws and the character of obligations imposed by it may reveal the same purpose." Rice, 331 US at 230. The development and regulation of comprehensive schemes for the disposal of nuclear waste are just such fields in which the federal interest is, and must be, assumed to preclude enforcement by the individual states.

Arguing that the Calfornia moratorium violates the Supremacy Clause should not be interpreted as a lack of sympathy with the legitimate concerns of the state regarding the continued generation of nuclear energy absent a fully developed technology for the safe disposal of its by-products. As our civilization reaps the benefits of the development of nuclear energy so does it face the dangers posed by the processes required in such development. In this sense nuclear energy is not dissimilar from many other technologies which produce industrial residue which is toxic and hazardous. Unable or unwilling to forego the societal benefits derived from such technology, the public accepts the generation of hazardous by-products, and becomes

concerned only when the full impact of intolerable levels of hazards is publicized. The emotional reaction to Love Canal and other industrial waste dump sites illustrates this acute problem. Any member of the public will accept the generation of hazardous wastes as an unavoidable consequence of an industrialized society only until the impact of such wastes threatens to touch him personally. Once the issue is personalized and the public fear aroused, it is practically impossible to inform and educate the public that a technologically sound and environmentally safe disposal facility is a solution to, and not merely part of the waste problem. Thus, individuals may easily accept the intellectual reality that a hazardous or nuclear waste facility is vital to protect against illegal and dangerous, unlicensed disposal of waste, while at the same time rejecting the location of such a facility in their own community.

Decisions as vital to the American economy and the health and safety of the American people, however, cannot be made subject to localized concerns, paranoia, or political

purposes. Certainly, no facility should be constructed until it is certified as being technologically sound. Equally as clear, the location for such a facility must be founded upon non-biased, scientific determinations and not on the whims of small segments of the population. Since the benefits of nuclear energy are shared nationally, the burden of producing that necessary energy must also be shared nationally. It is the combination of the Congressional intent to develop and encourage the field of nuclear energy, the national implications of nuclear waste disposal, the necessity for establishing an energy self-sufficiency based upon a diverse mix of products, and the extreme, but understandable public distrust or fear of potential harm from disposal facilities, which makes the regulation of nuclear wastes a field in which the federal interest must preclude regulation at the state or local level. Furthermore, the Supremacy Clause of Article VI, cl. 2, just as the Commerce Clause of Article I, cl. 3, was intended to protect against the kinds of disputes which arise when petty jealousies and parochial interests invade public policy

decision-making. While the former was intended to abort conflicts between federal policies and state policies, the latter operates to preclude unfair conduct among the states. It is the type of conflict presented in this case which the Framers of the Constitution contemplated in the Supremacy Clause.

While the state itself is preempted from using its legislative or executive machinery to obstruct federal efforts in the area of nuclear energy development, there is nothing in the Constitution which prohibits individual citizens and their representatives from demanding that the nuclear waste disposal issue become a priority concern for the federal government. The Supremacy Clause does mandate that the federal regulatory scheme in this area preempt state statutes; it does not, however, deprive individual citizens, communities, or states of their rights to demand a thorough and thoughtful federal response to this potentially serious economic and public health problem. Thus, the publicity which will result from the decision rendered in this matter may compel the Congress and

federal agencies, in which the exclusive authority over nuclear waste resides, to promptly identify and develop a permanent, technologically sound, and environmentally safe nuclear waste disposal plan as a top priority for the federal government.

CONCLUSION

The danger posed by the lack of technologically sound and environmentally safe permanent disposal facilities for nuclear waste cannot be overly emphasized. It is vital for the health and safety of the American people that the federal government identify the development of such facilities as a national priority. It is, however, the responsibility of the federal government, and the federal government alone, under the Atomic Energy Act to develop the necessary comprehensive solution and to regulate the field of nuclear waste. State actions, such as the California nuclear moratorium, which intrude into or conflict with this

federal authority do not promote, but inhibit, necessary national policies, and are preempted under the Supremacy Clause.

Respectfully submitted,

August 5, 1982

Joseph D. Alviani
New England Legal Foundation

Marcia Drake Seeler
New England Legal Foundation
110 Tremont Street
Boston, Massachusetts 02108
(617) 482-1410
Counsel for Amicus

Jean M. DeLuea (on Brief)

Amicus Brief

12

Office - Supreme Court, U.S.
FILED
NOV 26 1982
ALEXANDER L. STEVAS,
CLERK

No. 81-1945

In the Supreme Court of the United States

OCTOBER TERM, 1982

PACIFIC GAS & ELECTRIC COMPANY, et al,
Petitioners,

v.

STATE ENERGY RESOURCES CONSERVATION AND DEVELOPMENT COMMISSION, et al.
Respondents.

ON WRIT OF CERTIORARI TO THE UNITED STATES COURT OF APPEALS FOR THE NINTH CIRCUIT

BRIEF FOR THE STATE OF OREGON SUPPORTING AFFIRMANCE

DAVE FROHNMAYER
Attorney General of Oregon
STANTON F. LONG
Deputy Attorney General
WILLIAM F. GARY
Solicitor General
JAMES E. MOUNTAIN, JR.
Deputy Solicitor General
FRANK W. OSTRANDER, JR.
Assistant Attorney General
100 Justice Building
Salem, Oregon 97310
Telephone: (503) 378-4402
Counsel for Amici

TABLE OF CONTENTS

	Page
Statement of Interest	1
Summary of Argument	2
Argument	3
The State of Oregon, for Legitimate State Purposes, Regulates Decisions to Build or not Build Energy Facilities	3
The Nuclear Regulatory Commission Itself Leaves to the States the Decision as to Whether a Nuclear Plant Should be Built at All	7
Banning Future Nuclear Power Plants Until Resolution of Spent Fuel Disposal Problems is Within a State's Decision	12
Conclusion	14

TABLE OF AUTHORITIES

Cases Cited

	Page
State of New Hampshire v. Atomic Energy Commission, 406 F.2d 170 (1st Cir. 1969)	9
Vermont Yankee Nuclear Power Corp. v. N.R.D.C., 435 U.S. 519 (1977)	13-14
Power Reactor Development Co. v. International Union of Electrical, Radio and Machine Workers, A.F.L.-C.I.O., 367 U.S. 396 (1961)	9

Other Authorities

	Page
10 C.F.R. § 8.4	10
10 C.F.R. Part 50, Appendix C	11
42 U.S.C. 2011	2
42 U.S.C. 2021(k)	13
42 USC § 2021	10
42 USC § 2133	9-10
46 Fed. Reg. 41788 (August 18, 1981)	11
47 Fed. Reg. 13751	11, 12
48 Fed. Reg. 41788	11
Cal. Publ. Res. Code § 25524.1(b)	12
Cal. Publ. Res. Code § 25524.2	12
Or. Admin Rules 345-111-025	5
Or. Admin. Rules, chapter 345	5
Or. Rev. Stat. 469.010	4-5
Or. Rev. Stat. 469.300 - 469.570	2, 3, 4
Or. Rev. Stat. 469.310	4, 7
Or. Rev. Stat. 469.320	4
Or. Rev. Stat. 469.400	4
Or. Rev. Stat. 469.450	3
Or. Rev. Stat. 469.470	5
Or. Rev. Stat. 469.510	5
Or. Rev. Stat. 469.590	6
Or. Rev. Stat. 469.590 - 469.595	12
Or. Rev. Stat. 469.590 - 469.601	7
Or. Rev. Stat. 469.593	7, 12-13

TABLE OF AUTHORITIES — Continued

Other Authorities — Continued

Page

Or. Rev. Stat. 469.595 ..... 7-8, 12

Or. Rev. Stat. 469.992 4

Public Law 95-95, 91 Stat. 685, August 7, 1977 11

No. 81-1945

In the Supreme Court of the United States

OCTOBER TERM, 1982

PACIFIC GAS & ELECTRIC COMPANY, et al,

Petitioners,

v.

STATE ENERGY RESOURCES CONSERVATION AND DEVELOPMENT COMMISSION, et al.

Respondents.

ON WRIT OF CERTIORARI TO THE UNITED STATES COURT OF APPEALS FOR THE NINTH CIRCUIT

BRIEF FOR THE STATE OF OREGON SUPPORTING AFFIRMANCE

STATEMENT OF INTEREST OF THE STATE OF OREGON

This amicus curiae brief is submitted by the Attorney General of the State of Oregon on behalf of the state and its Energy Facility Siting Council. This brief is submitted, pursuant to Rule 36 of the Rules of the Supreme Court, in support of the respondents State Energy Resources Conservation and Development Commission, et al. Oregon contends that the decision of the Court of Appeals for

the Ninth Circuit should be upheld because the Atomic Energy Act of 1954 as amended, 42 U.S.C. 2011 *et seq.* does not preempt a state from requiring a satisfactory means of disposal of spent nuclear fuel before it permits any future construction of nuclear power plants. Oregon takes no position on the issue of whether the challenged amendments to California's Warren Alquist Act, Cal. Pub. Res. Code § 25524.1(b) and 25524.2 (West 1977), are ripe for judicial review.

Oregon has a significant interest in the outcome of this appeal. Oregon has a comprehensive statutory and administrative regulatory scheme which it applies to the siting, construction, and operation of a variety of energy facilities, including nuclear power plants. *See generally* Oregon Revised Statutes (hereinafter ORS) 469.300 through 469.570. This Court's adoption of the position advanced by petitioners would undercut significantly Oregon's nuclear power plant siting and regulatory scheme.

SUMMARY OF ARGUMENT

For a variety of public purposes, Oregon regulates decisions to build or not to build nuclear power plants and other types of energy facilities. Such regulation is an aspect of the states' traditional role in promoting public health, safety, and welfare. In deciding whether or not power plants should be built, the state does not usurp the role of the Nucle-

ar Regulatory Commission in regulating nuclear power under the Atomic Energy Act. The Supremacy Clause of the United States Constitution does not foreclose state regulation in this area. The Court of Appeals' holding that California's state regulatory scheme was not preempted by federal statutes should be affirmed.

ARGUMENT

A. The State of Oregon, for Legitimate State Purposes, Regulates Decisions to Build or not Build Energy Facilities

The people of Oregon, through their Legislative Assembly and by voter initiative, have determined that state government should regulate energy facilities in general, and nuclear facilities in particular. State regulation in this area is appropriate and does not conflict with federal regulatory schemes. Oregon has one operating nuclear power plant. Two additional energy facility sites have been approved conditionally for either coal or nuclear plants. Recently applications were withdrawn for two plants which were under consideration by both Oregon's Energy Facility Siting Council and the Nuclear Regulatory Commission.

Oregon's energy facility siting program is established and governed by ORS 469.300 to 469.570. ORS 469.450 provides for an Energy Facility Siting Council (EFSC) composed of seven citizens appointed

by the Governor and confirmed by the state Senate. Before a nuclear power plant or other energy facility may be constructed in Oregon, a "site certificate" must be obtained from the Council. ORS 469.320. A site certificate serves as a "one stop" permit. It is binding on all state agencies and on local governments. ORS 469.400(5).

Oregon's system for regulating energy facility development recognizes and accommodates federal regulation in this area. Oregon explicitly seeks to establish a comprehehsive system of regulation in cooperation with the federal government. ORS 469.310 states:

> "In the interest of the public health and the welfare of the people of this state, it is the declared public policy of this state that the siting, construction and operation of energy facilities shall be accomplished in a manner consistent with protection of the public health and safety and in compliance with the energy policy and air, water, solid waste, land use and other environmental protection policies of this state. It is, therefore, the purpose of ORS 469.300 to 469.570 and 469.992 *to exercise the jurisdiction of the State of Oregon to the maximum extent permitted by the United States Constitution and to establish in cooperation with the Federal Government, a comprehensive system for the siting, monitoring and operation of all energy facilities in this state.*" (Emphasis added.)

The Oregon Legislative Assembly has directed EFSC to consider a variety of important factors in establishing and administering a siting program. The criteria include: the health, safety, and welfare

of the public; environmental impacts; federal rules and regulations; land and water use impacts; present and future power needs; beneficial uses of wastes produced by generating facilities; city and county regulations; and the ability of the affected area to absorb industrial and population growth caused by the proposed facility. ORS 469.470 and 469.510.

Pursuant to this statutory mandate, EFSC has adopted general and specific standards which it employs in passing on an application to site a power plant. *See generally* Oregon Administrative Rules, (hereinafter OAR) chapter 345. The standards are so structured that an affirmative finding as to *each* is required before a site certificate can be issued for a specific proposed plant. Moreover, before deciding to accept the environmental consequences and the public health and safety risks which attend the construction and operation of any large thermal generating station, the EFSC must decide whether there is a need for the particular project. *See, e.g.*, OAR 345-111-025. Additionally, Oregon has adopted an energy policy which calls for the efficient use of existing resources and a commitment to the development of a diverse array of permanently sustainable resources, rather than total reliance on conventional nonrenewable resources such as coal, gas, or nuclear fuel. ORS 469.010 provides:

> "(1) Continued growth in demand for nonrenewable energy forms poses a serious and imme-

diate, as well as future, problem. It is essential that future generations not be left a legacy of vanished or depleted resources, resulting in massive environmental, social and financial impact.

"(2) It is the goal of Oregon to promote the efficient use of energy resources and to develop permanently sustainable energy resources. The need exists for comprehensive state leadership in energy production, distribution and utilization. It is, therefore, the policy of Oregon:

"(a) That development and use of a diverse array of permanently sustainable energy resources be encouraged utilizing to the highest degree possible the private sector of our free enterprise system.

"(b) That through state government example and other effective communications, energy conservation and elimination of wasteful and uneconomical uses of energy and materials be promoted. This conservation must include, but not be limited to, resource recovery and materials recycling.

"(c) That the basic human needs of every citizen, present and future, shall be given priority in the allocation of energy resources, commensurate with a perpetuation of a free and productive economy with special attention to the preservation and enhancement of environmental quality.

"(d) That state government assist every citizen and industry in adjusting to a diminished availability of energy.

"(e) That energy-efficient modes of transportation for people and goods shall be encouraged, while energy-inefficient modes of transportation shall be discouraged.

"(f) That cost-effectiveness be considered in state agency decision-making relating to energy sources, facilities or conventions, and that cost-

effectiveness be considered in all agency decision-making relating to energy facilities.

"(g) That state government shall provide a source of impartial and objective information in order that this energy policy may be enhanced."

This energy policy expressly is applicable to Oregon's siting program. ORS 469.310, *supra*.

Recently, Oregon's power plant siting scheme was amended by voters' initiative to prohibit future siting of nuclear power plants until a repository for spent fuel is licensed to operate by the federal government.

ORS 469.590 provides:

"As used in ORS 469.590 to 469.595.

"(1) 'High-level radioactive waste' means spent nuclear fuel or the radioactive byproducts from the reprocessing of spent nuclear fuel.

"(2) 'Spent nuclear fuel' means nuclear fuel rods or assemblies which have been irradiated in a power reactor and subsequently removed from that reactor."

ORS 469.593 provides:

"The people of this state find that if no permanent repository for high-level radioactive waste is provided by the Federal Government, the residents of the state may face the undue financial burden of paying for construction of a repository for such wastes. Therefore, the people of this state enact ORS 469.590 to 469.601."

ORS 469.595 provides:

"Before issuing a site certificate for a nuclear-fueled thermal power plant, the Energy Facility Siting Council must find that an adequate repository for the disposal of the high-level radioactive

> waste produced by the plant has been licensed to operate by the appropriate agency of the Federal Government. The repository must provide for the terminal dispositon of such waste, with or without provision for retrieval for reprocessing."

In short, the Oregon Legislative Assembly and the people of Oregon have decided that power plant siting decisions, and particularly decisions whether to build nuclear power plants, are matters of public concern which should be addressed by state law.

B. The Nuclear Regulatory Commission Itself Leaves to the States the Threshold Decision Whether a Nuclear Plant Should be Built at All

Petitioners apparently acknowledge that states may make the initial decision as to whether a plant is to be built on the basis of ratemaking, need, etc. (*See, e.g.*, Pet. Br. at 29.) The overall thrust of petitioners' argument is, however, that any state decision on any basis which stands in the way of a nuclear power plant is preempted by the Atomic Energy Act, as implemented by the Nuclear Regulatory Commission. (*See, e.g.*, Pet. Br. at 35, 42-48, and amicus curiae brief of the United States.) If the Court were to accept this argument, Oregon's siting and regulatory program would be emasculated. Such a result is not compelled by the United States Constitution and is not contemplated by federal regulation.

Petitioners rely heavily on the regulatory scheme provided by the Nuclear Regulatory Commission (NRC). Examination of the actual scope of regulation by the NRC, however, demonstrates that, if the states were banned from decision-making, a regulatory void would exist. Many of the concerns addressed by Oregon's siting program are beyond the scope of NRC's regulatory programs under the Atomic Energy Act. *State of New Hampshire v. Atomic Energy Commission*, 406 F.2d 170 (1st Cir. 1969) (thermal pollution of river water not within NRC's jurisdiction under Atomic Energy Act); *Power Reactor Development Co. v. International Union of Electrical, Radio and Machine Workers, A.F.L.-C.I.O.*, 367 U.S. 396 (1961) (cost not to be considered by NRC in its licensing decisions).

NRC is authorized to regulate the construction and operation of commercial reactors, in order to protect the public health and safety and the common defense. This authority is set forth in § 103(b) of the Atomic Energy Act, 42 USC § 2133, which provides in relevant part:

> "The Commission shall issue such licenses on a non-exclusive basis to persons applying therefor (1) whose proposed activities will serve a useful purpose proportionate to the quantities of special nuclear material or source material to be utilized; (2) who are equipped to observe and who agree to observe such safety standards to protect health and to minimize danger to life or property as the Commission may by rule establish; and (3) who

> agree to make available to the Commission such technical information and data concerning activities under such licenses as the Commission may determine necessary to promote the common defense and security and to protect the health and safety of the public. All such information may be used by the Commission only for the purposes of the common defense and security and to protect the health and safety of the public."

The NRC itself long has recognized that its jurisdiction does not extend beyond regulation for radiological health and safety and common defense purposes. *See*, 10 C.F.R. § 8.4 (an interpretation of § 274 of the Atomic Energy Act, 42 USC § 2021, issued by the Atomic Energy Commission's counsel in 1969.)

The NRC's Atomic Safety and Licensing Appeal Board has concluded:

> "[In a prior decision] we did not have the case of a state (or one of its political subdivisions) refusing to authorize the construction of a nuclear power plant on environmental grounds. Clearly, such a refusal would not conflict with Federal law. Although, by virtue of the National Environmental Policy Act, this Commission must make an environmental assessment of all proposal [*sic*] to construct and operate nuclear power plants, nothing in that Act requires a state to place its own stamp of approval on a specific proposal simply because it has passed Federal muster. To the contrary, states (and, upon appropriate delegation, their political subdivisions) retain the right, even in the face of the issuance of an N.R.C. construction permit, to preclude construction on such bases as a lack of need for additional generating capacity, or the environmental unacceptability of the proposed facility or

> site. We also did not have before us the case of a state (or one of its political subdivisions) acting to prevent or halt the operation of an already built nuclear plant for some valid reason under state law. There are at least some ground [*sic*] on which that could be done without conflicting with Federal law. [Citing the Clean Air Act amendments of 1977, Public Law 95-95, 91 Stat. 685, August 7, 1977]. *In the Matter of Consolidated Edison Co. of New York, Inc.* (Indian Point Station, Unit No. 2)." A.L.A.B.-453 (2 C.C.H. Nuc. Reg. Rptr. § 30,265.01 at p. 28,411).

Most recently, the NRC has eliminated its regulations concerning the financial qualifications and capabilities of a utility proposing to construct and operate a nuclear power plant. 10 C.F.R. Part 50, Appendix C, repealed March 31, 1982, 47 Fed. Reg. 13751. In doing so, the NRC relied, at least in part, on the existence of state regulation in this area. 46 Fed. Reg. 41788 (August 18, 1981). In its notice of rule repeal, the NRC stated that utility financial qualifications issues are only of concern to the NRC if related to the public health and safety:

> ". . . As to the first point raised by commentators opposing elimination of the financial qualifications review, the Commission does not find any reason to consider, in a vacuum, the general ability of utilities to finance the construction of new generation facilities. Only when joined with the issue of adequate protection of the public health and safety does this issue become pertinent. . . ."

The NRC further stated that actual cancellation of a nuclear power plant was not its concern:

> ". . . citing W.P.P.S.S.' experience is not convincing, because W.P.P.S.S.' response (and that of most other utilities encountering financial difficulties) has been to postpone or cancel their plants, actions clearly not inimical to public health and safety under the Atomic Energy Act." 47 Fed Reg 13751

Thus, the NRC interprets its own authority to be limited to protecting limited aspects of the public health and safety, *i.e.* radiological health and safety and the common defense. Broader public questions, such as cost, pollution, financial qualification (and subsequent impacts on ratepayers), and the threshold decision whether to allow construction are left to the states.

C. State Regulation Banning Future Nuclear Power Plants Until Spent Fuel Disposal Problems are Resolved is not Preempted by Federal Law

California, Oregon, and other states have decided to halt future nuclear power plant construction until the spent fuel disposal problem is resolved. *See, e.g.*, ORS 465.590 to 469.595 (quoted *supra* at 7); Cal. Publ. Res. Code §§ 25524.1(b) and 25524.2. Each state has set its own terms for when it will be satisfied that a solution exists. Oregon, for example, will rely on the issuance of a federal (NRC) license to operate an adequate repository. ORS 469.595, *supra*. The basis for Oregon's decision is expressed in ORS 469.593:

> "The people of this state find that if no permanent repository for high-level radioactive waste is provided by the Federal Government, the residents of the state may face the undue financial burden of paying for construction of a repository for such wastes. Therefore, the people of this state enact ORS 469.590 to 469.601."

Oregon's statute reflects an economic concern which clearly is beyond the reach of NRC's public health and safety regulation. Other states may have different reasons for choosing not to allow nuclear power plants. Other states have different regulatory programs, including traditional public utility rate and certificate of convenience and necessity regulation. Whatever the reasons, the need for a nuclear power plant is a state decision. As this Court noted in *Vermont Yankee Nuclear Power Corp. v. N.R.D.C.*, 435 U.S. 519 (1977):

> "There is little doubt that under the Atomic Energy Act of 1954, state public utility commissions or similar bodies are empowered to make the initial decision regarding the need for power. 42 U.S.C. § 2021(k). The Commission's prime area of concern in the licensing context, on the other hand, is national security, public health, and safety. §§ 2132, 2133, 2201." 435 U.S. at 550.

Moreover, the Court also recognized that the question whether to have nuclear power *at all* is one which a state may answer for itself.

> ". . . Nuclear energy may some day be a cheap, safe source of power or it may not. But Congress has made a choice to at least try nuclear energy, establising a reasonable review process

in which courts are to play only a limited role. The fundamental policy questions appropriately resolved in Congress and in the state legislatures are *not* subject to reexamination in the federal courts under the guise of judicial review of agency action. *Time may prove wrong the decision to develop nuclear energy, but it is Congress or the States within their appropriate agencies which must eventually make that judgment.*" 435 U.S. at 519, 520. (Emphasis supplied.)

CONCLUSION

For the foregoing reasons, Oregon joins with California and other states in urging the Court to uphold the Court of Appeals' decision that the provisions of the Atomic Energy Act do not preempt a state from deciding whether a nuclear power plant should be built.

Respectfully submitted,

DAVE FROHNMAYER
Attorney General of Oregon
STANTON F. LONG
Deputy Attorney General
WILLIAM F. GARY
Solicitor General
JAMES E. MOUNTAIN, JR.
Deputy Solicitor General
FRANK W. OSTRANDER, JR.
Assistant Attorney General
Counsel for Amici

Amicus Brief

13

No. 81-1945

Office - Supreme Court, U.S.
FILED
SEP 8 1982
ALEXANDER L. STEVAS,
CLERK

IN THE
Supreme Court of the United States

OCTOBER TERM, 1981

PACIFIC GAS AND ELECTRIC COMPANY
and
SOUTHERN CALIFORNIA EDISON COMPANY,
Petitioners,

v.

STATE ENERGY RESOURCES CONSERVATION &
DEVELOPMENT COMMISSION, *et al.*,
Respondents.

On Writ of Certiorari to the United States Court of Appeals for the Ninth Circuit

BRIEF AMICUS CURIAE OF PACIFIC LEGAL FOUNDATION, *et al.*, IN SUPPORT OF PETITIONERS

RONALD A. ZUMBRUN
ROBIN L. RIVETT
Pacific Legal Foundation
455 Capitol Mall, Suite 600
Sacramento, California 95814
Telephone: (916) 444-0154

RAYMOND M. MOMBOISSE
Counsel of Record

SAM KAZMAN
Pacific Legal Foundation
1990 M Street, N.W., Suite 550
Washington, D.C. 20036
Telephone: (202) 466-2686

Attorneys for Amici Curiae Pacific Legal Foundation, et al.

PRESS OF BYRON S. ADAMS PRINTING, INC., WASHINGTON, D.C.

TABLE OF CONTENTS

Page

TABLE OF AUTHORITIES CITED ii

INTEREST OF AMICI 2

SUMMARY OF ARGUMENT 3

ARGUMENT 4

I. IN HOLDING THAT CALIFORNIA'S NUCLEAR MORATORIUM IS NOT AIMED AT THE PREEMPTED AREA OF SAFETY REGULATION, THE COURT OF APPEALS IGNORED THE SUPREME COURT'S EXPLICIT RULING THAT STATE DECLARATIONS OF LEGISLATIVE PURPOSE CANNOT BE GIVEN CONCLUSIVE EFFECT 4

A. State Regulation of Nuclear Plant Radiation Hazards Is Expressly Preempted by Federal Law 4

B. The History of the California Moratorium's Enactment Demonstrates Its Safety-Related Purpose 6

C. The Ninth Circuit Erred When It Relied Upon the Report of One State Assembly Committee To Save the Nuclear Moratorium 7

II. THE FEDERAL GOVERNMENT'S DECISION TO PROCEED WITH NUCLEAR ENERGY IN THE ABSENCE OF A DESIGNATED WASTE DISPOSAL METHOD PREEMPTS ANY CONTRARY DECISION BY CALIFORNIA 11

III. CALIFORNIA'S OBSTRUCTION OF FEDERAL POLICY SHOULD BE DECLARED INVALID BY THIS COURT .. 13

CONCLUSION 15

APPENDIX

Annotations to California Public Resources Code § 25524.2 ..... 1a

Text of Proposition 15 ..... 2a

TABLE OF AUTHORITIES CITED

Page

CASES

Bethlehem Steel Co. v. *New York State Labor Relations Board*, 330 U.S. 767 (1947) 12

Hicks v. *Miranda*, 422 U.S. 332 (1975) 4

Hines v. *Davidowitz*, 312 U.S. 52 (1941) 15

Illinois v. *General Electric Co.*, Nos. 81-2768, 81-2778 (7th Cir. July 13, 1982) 5

Kassel v. *Consolidated Freightways Corp.*, 450 U.S. 662 (1981) 9

Natural Resources Defense Council, Inc. v. *Nuclear Regulatory Commission*, 582 F.2d 166 (2d Cir. 1978) 11-12

Natural Resources Defense Council, Inc. v. *Nuclear Regulatory Commission*, No. 74-1586 (D.C. Cir. April 27, 1982) 15

Northern States Power Co. v. *Minnesota*, 447 F.2d 1143 (8th Cir. 1971), *aff'd mem.*, 405 U.S. 1035 (1972) . 4-6

Pacific Legal Foundation v. *State Energy Resources Conservation & Development Commission*, 472 F. Supp. 191 (S.D. Cal. 1979), *rev'd*, 659 F.2d 903 (9th Cir. 1981), *cert. denied*, 102 S. Ct. 2959 (June 21, 1982) ..... *passim*

Perez v. *Campbell*, 402 U.S. 637 (1971) 9-11, 13

Power Reactor Development Co. v. *International Union of Electrical, Radio & Machine Workers*, 367 U.S. 396 (1961) 12

Ray v. *Atlantic Richfield Co.*, 435 U.S. 151 (1978) .. 12-13

Red Lion Broadcasting Co. v. *Federal Communications Commission*, 395 U.S. 367 (1969) 10

Securities and Exchange Commission v. *Briggs*, 234 F. Supp. 618 (N.D. Ohio 1964) 10

Silkwood v. *Kerr-McGee Corp.*, 667 F.2d 908 (10th Cir. 1981) 5

Train v. *Colorado Public Interest Research Group, Inc.*, 426 U.S. 1 (1976) 5

United States v. *City of New York*, 463 F. Supp. 604 (S.D.N.Y. 1978) 5

Washington State Building & Construction Trades Council v. *Spellman*, 518 F. Supp. 928 (E.D. Wash. 1981), *aff'd*, No. 81-3453 (9th Cir. Aug. 17, 1982) . 5

UNITED STATES CONSTITUTION

Supremacy Clause 9-10

STATUTES

Atomic Energy Act of 1954, 42 U.S.C.
§ 2012(a) 13
§ 2013(d) 13
§ 2021(b) 4
§ 2021(c)(l) 4
§ 2021(k) 4
§ 2258 12
§ 2259 12
Clean Air Act, 42 U.S.C. § 7422 14
Energy Reorganization Act of 1974, 42 U.S.C. §§ 5801, *et seq.* 11
California Nuclear Safeguards Initiative (Proposition 15) 6
California Public Resources Code
§ 25524.1 2
§ 25524.2 ..... 2, 15
§ 25524.3 2

PRESIDENTIAL AND AGENCY MATERIALS

44 Fed. Reg. 58,641 (1979) 14
17 Weekly Comp. of Pres. Docs. (Oct. 8, 1981) 15

MISCELLANEOUS

New York Times Index 1976 7
Reassessment of Nuclear Energy in California: A Policy Analysis of Proposition 15 and Its Alternatives (1976) 7-8
Supreme Court Rule No. 36.2 1

No. 81-1945

IN THE

Supreme Court of the United States

OCTOBER TERM, 1981

PACIFIC GAS AND ELECTRIC COMPANY
and
SOUTHERN CALIFORNIA EDISON COMPANY,
Petitioners,

v.

STATE ENERGY RESOURCES CONSERVATION &
DEVELOPMENT COMMISSION, *et al.*,
Respondents.

On Writ of Certiorari to the United States Court of Appeals for the Ninth Circuit

Pacific Legal Foundation (PLF), the San Diego Coalition, the San Diego Section of the American Nuclear Society, the San Diego County Building and Construction Trades Council, and Robert C. Thornberry hereby present this brief amicus curiae in support of the petitioners in this action. Pursuant to Supreme Court Rule No. 36.2, letters of consent to the filing of this brief have been obtained from counsel for all parties and have been filed with the Clerk.

INTEREST OF AMICI

The foregoing amici were plaintiffs in a separate court challenge to the California Nuclear Laws, contained in Sections 25524.1-25524.3 of California's Public Resources Code. That action resulted in a 1979 district court decision invalidating Section 25524.2, which imposes a moratorium on the construction of new nuclear plants until the State Energy Resources Conservation and Development Commission certifies that the federal government has approved a method of disposal for high-level nuclear wastes. *Pacific Legal Foundation* v. *State Energy Resources Conservation & Development Commission* (the *PLF* case), 472 F. Supp. 191 (S.D. Cal. 1979).

On appeal before the Ninth Circuit, this case was consolidated with the Pacific Gas and Electric Company (PG&E) action. *Pacific Legal Foundation* v. *State Energy Resources Conservation & Development Commission*, 659 F.2d 903 (9th Cir. 1981), *reprinted in* the Appendix to the PG&E Petition for Certiorari (PG&E App.) at 1.

The Supreme Court subsequently denied the *PLF* petition for certiorari. *Pacific Legal Foundation* v. *State Energy Resources Conservation & Development Commission*, 102 S.Ct. 2959 (June 21, 1982). Nonetheless, the District Court decision in the *PLF* case is particularly useful both for its detailed treatment of the California nuclear moratorium and, more importantly, for its consideration of factors which the Ninth Circuit subsequently ignored in its decision.

Amici present this brief out of their concern over the impact of California's moratorium on energy supplies and jobs both in California and in the United States. In the case of Robert C. Thornberry, that impact is demonstrated by the involvement of the moratorium in the

closing of the nuclear energy project where he was employed. *See* 472 F. Supp. at 195; 659 F.2d at 911-14, PG&E App. at 11-16 (reversing the District Court's summary judgment on the issue of standing). The long-term impact of this legislation will be far more widespread, especially in terms of these laws serving as precedent for other states. That impact would fall on all Americans, and it is the possibility of that result which has prompted the filing of this brief.

SUMMARY OF ARGUMENT

California's nuclear moratorium constitutes both an invasion of an area reserved for federal regulation and an obstruction of the federal policy to encourage nuclear energy. In reversing two district court decisions which had found the moratorium to be invalid, the Ninth Circuit Court of Appeals effectively rewrote the law of federal preemption. It gave conclusive weight to a state legislative committee report on the alleged purpose of such an approach. It ignored the preemptive effect of the federal government's decision to proceed with nuclear energy development in the absence of a federally designated waste disposal technology. Finally, the Court of Appeals allowed California to obstruct clear congressional policy by an across-the-board prohibition on new nuclear plants.

Each of these factors could in itself suffice to invalidate California's moratorium. In combination, they leave no basis whatsoever for allowing that state law to remain in effect. The decision of the Court of Appeals should be reversed by this Court.

ARGUMENT

I

IN HOLDING THAT CALIFORNIA'S NUCLEAR MORATORIUM IS NOT AIMED AT THE PREEMPTED AREA OF SAFETY REGULATION, THE COURT OF APPEALS IGNORED THE SUPREME COURT'S EXPLICIT RULING THAT STATE DECLARATIONS OF LEGISLATIVE PURPOSE CANNOT BE GIVEN CONCLUSIVE EFFECT

A. State Regulation of Nuclear Plant Radiation Hazards Is Expressly Preempted by Federal Law

The Atomic Energy Act, 42 U.S.C. §§ 2011-2282, expressly reserves the regulation of nuclear plant construction and operation to the federal government, and it prohibits state regulation of such plants with respect to radiation hazards. Under 42 U.S.C. § 2021(c)(7), the "construction and operation of any [nuclear] production or utilization facility" is and must remain the responsibility of the Nuclear Regulatory Commission (NRC) (formerly the Atomic Energy Commission (AEC); *see* 659 F.2d at 920 n.25, PG&E App. at 29 n.25). While regulatory responsibility for other areas may be transferred to individual states pursuant to 42 U.S.C. § 2021(b), federal responsibility for the regulation of nuclear plant construction and operation cannot be delegated. Similarly, while 42 U.S.C. § 2021(k) preserves state authority, it does so only for those regulations which are "for purposes *other than* protection against radiation hazards." (Emphasis added.)

The preemptive impact of these provisions was extensively analyzed in *Northern States Power Co.* v. *Minnesota*, 447 F.2d 1143 (8th Cir. 1971), *aff'd mem.*, 405 U.S. 1035 (1972).[1] The Eighth Circuit found that the legislative history

[1] This Court's summary affirmance of *Northern States* is a decision on the merits and is binding on lower federal courts. *Hicks* v. *Miranda*, 422 U.S. 332, 344-45 (1975).

> "makes it clear that Congress intended to preempt the field of the licensing and regulation of nuclear reactors to the exclusion of the states and that it did not intend to provide for dual regulation of radiation hazards, even as to those activities which could be turned over to the states." 447 F.2d at 1151.

The court concluded that "the federal government has exclusive authority under the doctrine of pre-emption to regulate the construction and operation of nuclear power plants . . . ." *Id.* at 1154.

The *Northern States* holding has since been applied by a number of courts. In *Train* v. *Colorado Public Interest Research Group, Inc.*, this Court noted that

> "state regulatory programs must be compatible with the AEC's regulatory program, § 2021(d)(2), and States are precluded from playing any role in several significant areas of regulation . . . ." 426 U.S. 1, 16 n.12 (1976), *citing Northern States.*

In *Silkwood* v. *Kerr-McGee Corp.*, the Tenth Circuit stated that

> "[w]e cannot read [*Northern States*] and *Train* other than as requiring us to hold invalid any state action that competes substantially with the AEC (NRC) in its regulation of radiation hazards associated with plants handling nuclear material." 667 F.2d 908, 923 (10th Cir. 1981) (reversing an award of punitive damages against a nuclear plant).

Several district courts have similarly invalidated state and local laws on the basis of *Northern States.* Restrictions on the importation of out-of-state nuclear waste were stricken in *Illinois* v. *General Electric Co.*, Nos. 81-2768, 81-2778 (7th Cir. July 13, 1982), and in *Washington State Building & Construction Trades Council* v. *Spellman*, 518 F. Supp. 928 (E.D. Wash. 1981), *aff'd*, No. 81-3453 (9th Cir. Aug. 17, 1982). In *United States* v. *City of New York*, 463 F. Supp. 604 (S.D.N.Y. 1978), a muni-

cipal requirement of health and safety certification for nuclear facilities was likewise invalidated.

The Court of Appeals stated that it was following the *Northern States* decision in upholding California's nuclear moratorium. 659 F.2d at 923, PG&E App. at 35. As is shown below, the court followed neither that case nor the approach which this Court has set forth for analyzing preemption issues.

B. The History of the California Moratorium's Enactment Demonstrates Its Safety-Related Purpose

The California Nuclear Laws were considered and enacted during the pendency of the public referendum measure known as the California Nuclear Safeguards Initiative, or Proposition 15 (*reprinted in* the Appendix to this brief at 2a). 659 F.2d at 924, PG&E App. at 37. Proposition 15 stated at its outset that

> "[t]he people further find and declare that substantial questions have been raised concerning the effect of nuclear fission power plants on land use and land use planning, *as well as on public health and safety*." Proposed Section 67502 (emphasis added).

The proposition proposed a number of prerequisites for the certification of new nuclear plants and for the continued operation of existing nuclear plants, including the requirement of numerous safety assurances regarding plant operation. In the words of the State Energy Commission, Proposition 15 "would have simply shut down all existing nuclear power plants and flatly prohibited the construction of new ones." State Energy Commission, *PLF* Appellate Brief at 9;[2] *see also* 659 F.2d at 924, PG&E App. at 37-39.

---

[2] While the *PLF* and *PG&E* cases were consolidated before the Ninth Circuit, the State Energy Commission filed separate briefs in each case, in order to distinguish between them, references to these briefs will indicate the particular case in which they were filed.

The historical relationship between Proposition 15 and the California Nuclear Laws is beyond question. The California Assembly Committee on Resources, Land Use, and Energy, which drafted the Nuclear Laws, stated that they were "designed to achieve in part and to supplement the goals of the Initiative [Proposition 15]." *Reassessment of Nuclear Energy in California: A Policy Analysis of Proposition 15 and Its Alternatives* 154 (1976), Excerpt of Record (ER) 53, 212 (9th Cir.). Because of their similar purposes, the state Legislature provided that the laws "shall not become operative if Proposition 15 . . . is adopted." Historical Note to Section 25524.2, Appendix hereto at 1a.

The California Nuclear Laws were enacted on June 3, 1976. Five days later, Proposition 15 was rejected by the voters of California by a 2-1 margin. *New York Times Index 1976* at 120 col. 2.

C. The Ninth Circuit Erred When It Relied Upon the Report of One State Assembly Committee To Save the Nuclear Moratorium

The circumstances described above clearly indicate that the safety purposes of Proposition 15 were shared by the California Nuclear Laws. The State Energy Commission went so far as to claim that the Nuclear Laws were responsible for the proposition's defeat:

> "Forestalling voter approval of a ballot initiative that would have simply shut down all existing nuclear power plants and flatly prohibited the construction of new ones, [footnote omitted] the legislature therefore enacted three laws, including the nuclear waste-disposal law . . . ." State Energy Commission, *PLF* Appellate Brief at 9-10.

The Court of Appeals thus had ample reason to conclude, as it did, that the Nuclear Laws were "enacted as

an alternative to" Proposition 15. 659 F.2d at 924, PG&E App. at 37. Yet having made this characterization, the court proceeded to construct an elaborate dichotomy between the purposes of the Nuclear Laws and those of the proposition. According to the court, there were "a number of perceived problems with nuclear power, some safety-related and some economic." *Id.*, PG&E App. at 38. The economic issues were allegedly "stipulated" by industry and government, while the safety issues were not. *Id.* Despite its recognition of these issues, the court found that the proposition and the nuclear moratorium did not deal with them in similar ways. According to the court, "Proposition 15 was designed to deal with both types of problems associated with nuclear waste disposal." *Id.*, PG&E App. at 39. On the other hand, the moratorium

> "was intended to deal only with the 'stipulated' problem caused by the lack of any approved method of waste disposal. The [state legislative] committee explained that its bills were 'designed to provide a pause in the deployment of nuclear power plants until [certain] problems which may 'clog' the nuclear fuel cycle are resolved.' . . . One of the 'major distinguishing features' differentiating Proposition 15 and the committee bills was that '[w]aste disposal *safety* is not directly addressed by the bills, which ask only that a method be chosen and accepted by the federal government.' " 659 F.2d at 925, PG&E App. at 39-40, *quoting from* the *Reassessment* report, *supra* at 7 (emphasis in original, citations omitted).

As this passage indicates, the court had one and only one basis for this conclusion—the *Reassessment* report. The court cited this document nearly a dozen times while discussing the legislative purpose of the Nuclear Laws, and relied on it exclusively. *See* 659 F.2d at 924-25, PG&E App. at 37-40.

The Supreme Court, however, has ruled that such a legislative document must be viewed critically in pre-emption cases; otherwise, it would be all too easy for a state committee to save an invalid law by means of a carefully worded report:

> "We can no longer adhere to the aberrational doctrine . . . that state law may frustrate the operation of federal law as long as the state legislature in passing its law had some purpose in mind other than one of frustration. Apart from the fact that it is at odds with the approach taken in nearly all our Supremacy Clause cases, *such a doctrine would enable state legislatures to nullify nearly all unwanted federal legislation by simply publishing a legislative committee report articulating some state interest or policy—other than frustration of the federal objective*—that would be tangentially furthered by the proposed state law. . . . [A]ny state legislation which frustrates the full effectiveness of federal law is rendered invalid by the Supremacy Clause." *Perez* v. *Campbell*, 402 U.S. 637, 651-52 (1971) (emphasis added).

As this Court has stated elsewhere, "the incantation of a purpose to promote the public health or safety does not insulate a state law from Commerce Clause attack," *Kassel* v. *Consolidated Freightways Corp.*, 450 U.S. 662, 670 (1981). It is no less true that the incantation of some other purpose cannot shield a state law from the supremacy clause.

The District Court in the *PLF* case followed this approach, rejecting the premise

> "that any sort of regulation at all is permissible as long as a state legislature is willing and ingenious enough to conjure up a legislative purpose other than radiation control." 472 F. Supp. at 198.

Yet *Perez* goes totally unmentioned in the Court of Appeals' decision. There is not even a suggestion in that opinion that it might be appropriate to give this committee report less than conclusive weight, despite the evidence that the authors of that report knew of the potential conflict wth federal law.[3]

Legislation should be construed in "the historical context in which it was written." *Securities and Exchange Commission* v. *Briggs*, 234 F. Supp. 618, 622 (N.D. Ohio 1964). The Court of Appeals admitted that Proposition 15 was in part a safety measure. 659 F.2d at 924, PG&E App. at 37-38. It admitted that the Nuclear Laws were "enacted as an alternative" to that measure. *Id.*, PG&E App. at 37. Yet it nonetheless proceeded to find that the Nuclear Laws were not safety related, on the basis of an elaborate construct of "stipulated" and "non-stipulated" issues set forth in the report of a state assembly committee. This approach is contrary to common sense,[4] and it

[3] The assembly committee recognized that there were serious questions regarding the constitutionality of Proposition 15 under the supremacy clause, and discussed this issue extensively in its report. ER at 182-89. Once the Nuclear Laws were enacted, both the California Legislative Counsel and the State Attorney General concluded that these laws were federally preempted. Letter from Legislative Counsel Bion M. Gregory to State Senator Alfred E. Alquist (Sept. 14, 1977); Opinion of State Attorney General Evelle J. Younger, No. 80 77/50 (Apr. 25, 1978) (Exhibits A and B, respectively, to PLF Memorandum in Opposition to Request for Continuance of Summary Judgment Hearing (S.D. Cal. Nov. 8, 1978); *see also* Appendix hereto at 1a).

[4] It is generally true that "unsuccessful attempts at legislation are not the best of guides to legislative intent." *Red Lion Broadcasting Co.* v. *Federal Communications Commission*, 395 U.S. 367, 381 n.11 (1969). But this maxim of statutory construction applies to attempts to draw inferences from a legislature's *failure* to enact a bill. *See id.* at n.11. The maxim has no applicability to a case such as this, where legislation has been enacted in order to *obviate* a pending voter initiative.

was explicitly rejected by this Court in *Perez*. As in the case of the Emperor's New Clothes, the committee's attempt to bedeck the nuclear moratorium with secondary purposes should not succeed in hiding what is underneath.

II

THE FEDERAL GOVERNMENT'S DECISION TO PROCEED WITH NUCLEAR ENERGY IN THE ABSENCE OF A DESIGNATED WASTE DISPOSAL METHOD PREEMPTS ANY CONTRARY DECISION BY CALIFORNIA

The federal government has decided to proceed with nuclear energy development despite the fact that no method for permanent waste disposal has yet been decided upon. As the Second Circuit stated in *Natural Resources Defense Council, Inc.* v. *NRC*,

> " 'it is clear that from the very beginnings of commercial nuclear power the Congress was aware of the absence of a permanent waste disposal facility, but decided to proceed with power plant licensing.' [Citation omitted.]." 582 F.2d 166, 170 (2d Cir. 1978).

That court found that "Congress did not intend such a condition" as a prerequisite to licensing. *Id.* at 171.

> "[I]f there were any doubt over the intent of Congress . . . not to require a moratorium on nuclear power reactor licensing pending an affirmative determination [on permanent waste disposal], we are persuaded that the matter was laid to rest by enactment of the Energy Reorganization Act of 1974 . . . 42 U.S.C. §§ 5801 *et seq.* Therein, Congress expressly recognized and impliedly approved NRC's regulatory scheme and practice . . . ." 582 F.2d at 174.[5]

[5] Surprisingly, the Court of Appeals cited the 1974 Energy Reorganization Act in *support* of its claim that federal policy regarding nuclear energy had changed. 659 F.2d at 926-27, PG&E App. at 43-44. (Footnote continued on Page 12.)

While either Congress or NRC *could* have made the approval of a waste disposal technology a precondition to the licensing of new nuclear plants, *they both chose not to.* This Court has made it clear that their decision preempts contrary action by a state.

> " '[W]here failure of . . . federal officials affirmatively to exercise their full authority takes on the character of a ruling that no such regulation is appropriate or approved pursuant to the policy of the statute,' States are not permitted to use their police power to enact such a regulation." *Ray* v. *Atlantic Richfield Co.*, 435 U.S. 151, 178 (1978), *quoting Bethlehem Steel Co.* v. *New York State Labor Relations Board*, 330 U.S. 767, 774 (1947).

In the *Ray* case, this Court found that a number of Washington State regulations governing oil tankers were federally preempted. Among these was an absolute ban on tankers above a certain size. The Court ruled that this specific provision was preempted by the United States Department of Transportation's "*failure* to promulgate a ban on the operations of [such] oil tankers." 435 U.S. at

---

This Court has itself noted the special relevance of Congress's extensive involvement in overseeing the administrative regulation of nuclear energy.

> "It may often be shaky business to attribute significance to the inaction of Congress, but under these circumstances, and considering especially the peculiar responsibility and place of the Joint Committee on Atomic Energy in the statutory scheme, we think it fair to read this history as a *de facto* acquiescence in and ratification of the [AEC's] licensing procedure by Congress." *Power Reactor Development Company* v. *International Union of Electrical, Radio & Machine Workers*, 367 U.S. 396, 409 (1961).

(The Joint Committee was abolished in 1977. Its functions are now carried out by separate House and Senate committees. 42 U.S.C. §§ 2258-2259.) The Second Circuit quoted this passage in *Natural Resources Defense Council*, 582 F.2d at 172.

178 (emphasis added). Both Congress and NRC have similarly engaged in a considered "failure to promulgate a ban" on new nuclear plants. This Court's reasoning in *Ray* is directly applicable here.

As the District Court stated in the *PLF* case,

> "the question of whether nuclear power plants may be constructed and operated in the absence of a demonstrated technology for the permanent disposal of nuclear waste is exclusively reserved to the NRC by [42 U.S.C. §]2021(c) and . . . state regulation on this subject is displaced." 472 F. Supp. at 199-200.

Like the principle declared in *Perez* that state legislative reports are not to be given conclusive effect, the principle of preemption set forth in *Ray* goes unmentioned in the Court of Appeals' decision.

III

CALIFORNIA'S OBSTRUCTION OF FEDERAL POLICY SHOULD BE DECLARED INVALID BY THIS COURT

The Atomic Energy Act states that the "development, utilization, and control of atomic energy for military and for all other purposes are vital to the common defense and security." 42 U.S.C. § 2012(a). It declares that one of its purposes is

> "to encourage widespread participation in the development and utilization of atomic energy for peaceful purposes to the maximum extent consistent with the common defense and security and with the health and safety of the public . . . ." *Id.* at § 2013(d).

Other than by a total shutdown of existing nuclear plants, California could not have more fully blocked this congressional policy than through its moratorium:

> "Congress' policy to encourage the development and utilization of nuclear energy would decidedly be frus-

> trated if all fifty states had statutes similar to California Public Resources Code section 25524.2." *PLF v. State Energy Commission*, 472 F. Supp. at 200.

Yet the Ninth Circuit ruled that California's across-the-board prohibition of new nuclear plants does not obstruct or frustrate national policy. To reach this conclusion, the Ninth Circuit had to distort the type of federal policy which *would* be frustrated by the California moratorium. According to the court, such a policy would involve "an intent to promote nuclear power *at all costs*." 659 F.2d at 926, PG&E App. at 42 (emphasis added). Having constructed this straw man as the sine qua non of preemption, it is not surprising that the court failed to find it in the Atomic Energy Act.

By its terms, that Act seeks to encourage nuclear energy development. There is no basis for the contention that this federal policy has been changed. In the Supreme Court's own words, such a basis would consist of "the clear indication of legislative intent that we might expect before recognizing such a change in policy." *Id.* But no such indication exists.[6] The federal policy on nuclear ener-

---

[6] The Court of Appeals suggested that, under the Clean Air Act Amendments of 1977, 42 U.S.C. § 7422, states were empowered to "prevent nuclear plants from being built at all." 659 F.2d at 927, PG&E App. at 44. But the Environmental Protection Agency (EPA), which has the duty of implementing the Clean Air Act, has concluded that this statute was not intended to enable states to cause industry shutdowns by exercising their new powers in extreme fashion. According to EPA, this

> "conclusion becomes even more inescapable in light of the 1977 Amendments, which added radioactive substances—long regarded as confirmed carcinogens and emitted from a wide variety of sources—to the coverage of the Act, with no mention anywhere of industry closures as the inevitable consequence." EPA, *Proposed Rulemaking: National Emission Standards for Identifying, Assessing and Regulating Airborne Substances Posing a Risk of Cancer*, 44 Fed. Reg. 58,641, 58,660 col. 3 (1979) (emphasis added, footnotes omitted).

gy has been reaffirmed by the President in his statement that nuclear energy is "[o]ne of the best potential sources of new electrical energy supplies in the coming decades." Statement Announcing a Series of Policy Initiatives, 17 Weekly Comp. of Pres. Docs. 1101 (Oct. 8, 1981). This policy was again recognized in a recent decision of the District of Columbia Circuit:

> "It is not the function of the judicial branch either to initiate or to halt the development of a nuclear power industry. These *national policy choices* are constitutionally vested in the President and the Congress of the United States, and they have been made *in favor of proceeding.*" *Natural Resources Defense Council, Inc.* v. *NRC*, No. 74-1586 (D.C. Cir. April 27, 1982), slip op. at 2 (Edwards, J., dissenting in part on other grounds) (emphasis added).

Neither is it the function of any one state to halt this development once those national policy choices have been made. Section 25524.2 inescapably "stands as an obstacle to the accomplishment and execution of the full purposes and objectives of Congress." *Hines* v. *Davidowitz*, 312 U.S. 52, 67 (1941). By virtue of that impact, California's moratorium should be ruled invalid.

CONCLUSION

In upholding California's nuclear moratorium, the Ninth Circuit Court of Appeals ignored a number of basic Supreme Court rulings on preemption. The Court of Appeals gave conclusive effect to the report of one state assembly committee, despite this Court's warning that such an approach is "aberrational." The Court of Appeals avoided dealing with the preemptive effect of the federal government's decision to proceed with nuclear energy development in the absence of a designated means of storing nuclear wastes. Most importantly, the court

approved California's obstruction of an important and explicit congressional policy—the encouragement of nuclear energy development and use.

For these reasons, the decision of the Court of Appeals should be reversed.

Respectfully submitted,

RONALD A. ZUMBRUN
ROBIN L. RIVETT
Pacific Legal Foundation
455 Capitol Mall, Suite 600
Sacramento, California 95814
Telephone: (916) 444-0154

RAYMOND M. MOMBOISSE
Counsel of Record
SAM KAZMAN
Pacific Legal Foundation
1990 M Street, N.W., Suite 550
Washington, D.C. 20036
Telephone: (202) 466-2686
Attorneys for Amici Curiae
Pacific Legal Foundation, et al.

September 3, 1982

ANNOTATIONS TO CALIFORNIA PUBLIC RESOURCES CODE § 25524.2

Historical Note

Section 2 of Stats.1976, c. 196, p. ____, provided:

"The provisions of this act shall not become operative if Proposition 15 of the June 1976 election is adopted by the people, whether or not this bill is chaptered before or after such adoption." [Proposition 15, Nuclear Power Plants, was rejected by the people on June 8, 1976.]

[Reprinted from CAL. PUB. RES. CODE (West 1977)]

1. Validity

Sections 25524.1, this section and 25524.3, imposing state regulatory authority over certain aspects of the development, construction and operation of nuclear power plants are preempted by the federal regulatory scheme with respect to nuclear energy and therefore are in violation of the Supremacy Clause of the United States Constitution. 61 Ops.Atty.Gen. 159, 4-25-78.

[Reprinted from CAL. PUB. RES. CODE (West Supp. 1982)]

TEXT OF PROPOSITION 15

This initiative measure proposes to add a Title 7.8 to the Government Code. It does not amend any existing law.

PROPOSED LAW

Sec. 1. Title 7.8 (commencing with Section 67500) is added to the Government Code, to read:

TITLE 7.8 LAND USE AND NUCLEAR POWER - LIABILITY AND SAFEGUARDS ACT

67500. This title shall be known and may be cited as the Nuclear Safeguards Act.

67501. The people and the State of California hereby find and declare that nuclear power plants can have a profound effect on the planning for, and the use of, large areas of the state, as do related facilities connected with the manufacture, transportation, and storage of nuclear fuel, and the transportation, reprocessing, storage, and disposal of radioactive materials from nuclear fission power plants.

67502. The people further find and declare that substantial questions have been raised concerning the effect of nuclear fission power plants on land use and land use planning, as well as on public health and safety. Such questions include, but are not limited to, (a) the reliability of the performance of such plants, with serious economic, security, health, and safety consequences; (b) the reliability of the emergency safety systems for such plants; (c) the security of such plants, and of systems of transportation, reprocessing, and disposal or storage of wastes from such plants from earthquakes, other acts of God, theft, sabotage, and the like; (d) the state of knowledge regarding ways to store safely or adequately dispose of the radioactive waste products from nuclear fission power plants and related facilities; and (e) the creation by one generation of potentially catastrophic hazards for future generations.

67503. A nuclear fission power plant and related facilities may be a permitted land use in the State of California and its waters and considered to be reasonably safe and susceptible to rational land use planning, and may be licensed by state or local agencies, and may be constructed in the state only if all of the following conditions are met:

(a) after one year from the date of the passage of this measure, the liability limits imposed by the federal government have been removed and full compensation assured, either by law or waiver, as determined by a California court of competent jurisdiction and subject to the normal rights of appeal, for the people and businesses of California in the event of personal injury, property damage, or economic losses resulting from escape or diversion of radioactivity or radioactive materials from a nuclear fission power plant, and from escape or diversion of radioactivity or radioactive materials in the preparation, transportation, reprocessing, and storage or disposal of such materials associated with such a plant; and

(b) after five years from the date of the passage of this measure,

(1) the effectiveness of all safety systems, including but not limited to the emergency core cooling system, of any nuclear fission power plant operating or to be operated in the State of California is demonstrated, by comprehensively testing in actual operation substantially similar physical systems, to the satisfaction of the Legislature, subject to the procedures specified in Section 67507; and

(2) the radioactive wastes from such a plant can be stored or disposed of, with no reasonable chance, as determined by the Legislature, subject to the procedures specified in Section 67507, of intentional or unintentional escape of such wastes or radioactivity into the natural environment which will eventually adversely affect the land or the people of the State of California, whether due to imperfect storage technologies, earthquakes or other acts of God, theft, sabotage, acts of war, governmental or social instabilities, or whatever other sources the Legislature may deem to be reasonably possible.

67504. (a) If within one year from the date of the passage of this measure the provisions of subsection 67503(a) have not been met, then each existing nuclear fission power plant and such plants under construction failing to meet the conditions specified in subsection 67503(a) shall not be operated at any time at more than sixty per cent of the original licensed core power level of such plant.

(b) Beginning five years from the date of the passage of this measure, each existing nuclear fission power plant and each such plant under construction shall not be operated at any time at more than sixty per cent of the licensed core power level of such plant and shall thereafter be derated at a rate of ten per cent per year of the licensed core power level of such plant, and shall not be operated at any time in excess of such reduced core power level, unless all of the conditions enumerated in Section 67503 are met.

67505. The provisions of Sections 67503 and 67504 shall not apply to small-scale nuclear fission reactors used exclusively for medical or experimental purposes.

67506. One year from the date of the passage of this measure, the Legislature shall initiate the hearing process specified in Section 67507, and, within three years from the date of the passage of this measure, determine whether it is reasonable to expect that the conditions specified in Section 67503(b) will be met. Unless the Legislature determines that it is reasonable to expect that the conditions of Section 67503(b) will be met, then nuclear fission power plants shall be a permitted land use in California only if such existing plants and such plants under construction are operated at no more than sixty per cent of their licensed core power level. Unless the determinations specified in this section are made in the affirmative, then neither the siting nor the construction of nuclear fission power plants or related facilities shall be a permitted land use in California.

67507. The determinations of the Legislature made pursuant to subsection 67503(b) and Section 67507 shall be made only after sufficient findings and only by a two-thirds vote of each house.

(a) To advise it in these determinations, the Legislature shall appoint an advisory group of at least fifteen (15) persons, comprised of distinguished experts in the fields of nuclear engineering, nuclear weaponry, land use planning, cancer research, sabotage techniques, security systems, public health, geology, seismology, energy resources, liability insurance, transportation security, and environmental sciences; as well as concerned citizens. The membership of this advisory group shall represent the full range of opinion on the relevant questions. The group shall solicit opinions and information from responsible interested parties, and hold widely publicized public hearings, after adequate notice, in various parts of the State prior to preparing its final report. At such hearings an opportunity to testify shall be given to all persons and an opportunity to cross-examine witnesses shall be given to all interested parties, within reasonable limits of time. The advisory group shall make public a final report, including minority reports if necessary, containing its findings, conclusions, and recommendations. Such report shall be summarized in plain language and made available to the general public at no more than the cost of reproduction.

(b) To ensure full public participation in the determinations specified in subsection 67503(b) and Section 67506, the Legislature shall also hold open and public hearings, within a reasonable time after the publication of the report specified in subsection (a) of this section, and before making its findings, giving full and adequate notice, and an opportunity to testify to all persons and the right to cross-examine witnesses to all interested parties, within reasonable limits of time.

(c) All documents, records, studies, analyses, testimony, and the like submitted to the Legislature in conjunction with its determinations specified in subsection 67503(b) and Section 67506, or to the advisory group described in subsection (a) of this section, shall be made available to the general public at no more than the cost of reproduction.

(d) No more than one-third of the members of the advisory group specified in this section shall have, during the two years prior to their appointment to the group, received any

substantial portion of their income directly or indirectly from any individual, association, corporation, or governmental agency engaged in the research, development, promotion, manufacture, construction, sale, utilization, or regulation of nuclear fission power plants or their components.

(e) The members of the advisory group shall serve without compensation, but shall be reimbursed for the actual and necessary expenses incurred in the performance of their duties to the extent that reimbursement is not otherwise provided by another public agency. Members who are not employees of other public agencies shall receive fifty dollars ($50) for each full day of attending meetings of the advisory group.

(f) The advisory group may:

(1) Accept grants, contributions, and appropriations;

(2) Create a staff as it deems necessary;

(3) Contract for any professional services if such work or services cannot satisfactorily be performed by its employees;

(4) Be sued and sue to obtain any remedy to restrain violations of this title. Upon request of the advisory group, the State Attorney General shall provide necessary legal representation.

(5) Take any action it deems reasonable and necessary to carry out the provisions of this title.

(g) The advisory group and all members of the advisory group shall comply with the provisions of Sections 87100 through 87312 inclusive, of Title 9 of the California Government Code.

(h) Any person who violates any provision of this section shall be subject to a fine of not more than ten thousand dollars ($10,000), and shall be prohibited from serving on the advisory group.

67508. (a) The Governor shall annually publish, publicize, and release to the news media and to the appropriate officials of affected communities the entire evacuation plans specified in

the licensing of each nuclear fission power plant. Copies of such plans shall be made available to the public upon request, at no more than the cost of reproduction.

(b) The Governor shall propose procedures for annual review by state and local officials of established evacuation plans, with regard for, but not limited to such factors as changes in traffic patterns, population densities, and new construction of schools, hospitals, industrial facilities, and the like. Opportunity for full public participation in such reviews shall be provided.

Sec. 2. There is hereby appropriated from the General Fund in the State Treasury to the legislative advisory group created by Section 67507 of the Government Code the sum of eight hundred thousand dollars ($800,000) for expenditures necessary in carrying out the responsibilities and duties set forth in Section 67507 of the Government Code.

Sec. 3. Amendments to this measure shall be made only by a two-thirds affirmative vote of each house of the Legislature, and may be made only to achieve the objectives of this measure.

Sec. 4. If any provision of this measure or the application thereof to any person or circumstances is held invalid, such invalidity shall not affect other provisions or applications of the measure which can be given effect without the invalid provision or application, and to this end the provisions of this measure are severable.

[Reprinted from Excerpt of Record at 217-21, *Pacific Legal Foundation v. State Energy Resources Conservation & Development Commission*, Nos. 79-3365, 79-3382, 659 F.2d 903 (9th Cir. 1981)]

Amicus Brief

14

No. 81-1945

Office - Supreme Court, U.S.
FILED
NOV 23 1982
ALEXANDER L. STEVAS,
CLERK

IN THE

Supreme Court of the United States

OCTOBER TERM, 1982

PACIFIC GAS AND ELECTRIC COMPANY, ET AL.,
Petitioners,

v.

STATE ENERGY RESOURCES CONSERVATION AND DEVELOPMENT COMMISSION, ET AL.,
Respondents.

ON WRIT OF CERTIORARI TO THE UNITED STATES COURT OF APPEALS FOR THE NINTH CIRCUIT

JOINT BRIEF FOR THE PUBLIC UTILITIES COMMISSION OF THE STATE OF CALIFORNIA AND THE NATIONAL ASSOCIATION OF REGULATORY UTILITY COMMISSIONERS AS AMICI CURIAE SUPPORTING AFFIRMANCE

JANICE E. KERR
J. CALVIN SIMPSON
GRETCHEN DUMAS
5066 State Building
San Francisco, California 94102
(415) 557-0470
Attorneys for the Public Utilities Commission of the State of California

PAUL RODGERS,
General Counsel
CHARLES D. GRAY, Assistant General Counsel
DEBORAH A. DUPONT,
Deputy Assistant General Counsel
1102 Interstate Commerce Commission Building
Post Office Box 684
Washington, D.C. 20044
(202) 628-7324
Attorneys for the National Association of Regulatory Utility Commissioners

THE CASILLAS PRESS, INC.–1717 K Street, N. W.–Washington, D. C.–223-1220

TABLE OF CONTENTS

Page

TABLE OF AUTHORITIES ii

INTEREST OF AMICI CURIAE 1

SUMMARY OF THE ARGUMENT 3

ARGUMENT 4

I. The Atomic Energy Act reserves to the States regulatory authority over the construction and operation of nuclear power plants except as to questions of radiological safety 4

A. The extent and manner of a State's reliance on nuclear power as a source of electrical generating capacity has historically been regulated by States through their reserved police power 7

B. The Atomic Energy Act clearly supports the continuation of State authority to determine whether a nuclear power plant is an economically feasible and reliable source of energy 9

II. If States no longer have regulatory jurisdiction over cost and reliability matters a regulatory vacuum will be created which is inconsistent with both the spirit and language of the Atomic Energy Act 16

III. States should not be prevented from pursuing energy goals, such as energy conservation through the ratesetting mechanism 21

CONCLUSION 22

TABLE OF AUTHORITIES

Cases:	Page
Calvert Cliffs' Coordinating Committee v. AEC, 449 F.2d 1109 (D.C. Cir. 1969)	6
Cities of Stateville, et al. v. Atomic Energy Commission, 441 F.2d 962 (D.C. Cir. 1969)	6, 12, 14
Consolidated Edison Co. of New York City (Indian Point Station, Unit 2) 7 NRC 31 (1978)	12
FPC v. Hope Natural Gas, 320 U.S. 591 (1944)	7
Huron Cement Co. v. Detroit, 362 U.S. 440 (1960)	9
Long Island Lighting Company, In the Matter of, 9 NRC 51 (1979)	12
Marshall v. Consumer Power, 65 Mich. Appl. 237, 237 N.W.2d 266 (1976)	6, 14
Midland Plant Units 1 and 2, ALRB-458, 2 Nuc. Reg. Reporter (CCH) Sec. 30 (Feb. 14, 1978)	12
Munn v. Illinois, 94 U.S. 77 (1886)	7
New Hampshire v. AEC, 406 F.2d 170 (1st Cir. 1969)	6, 14
Northern California Association to Preserve Bodega Head and Harbor, Inc. v. California Public Utilities Commission, 61 Cal. 2d 126 (1964)	6, 14
Northern States Power Co. v. Minnesota, 447 F.2d 1143 (8th Cir. 1971), *aff'd mem.,* 405 U.S. 1035 (1972)	6, 13

Page

Pacific Legal Foundation v. State Energy Resources Conservation and Development Commission, 659 F.2d 903 (9th Cir. 1981) 3, 6, 9, 10, 13

Rice v. Santa Fe Elevator Corp., 331 U.S. 218 (1947) 8

Southern California Edison Co. (San Onofre Nuclear Generating Station, Units 2 and 3), ALAB-171, 7 AEC 37 (1974) 12

Union Dry Goods Co. v. Georgia Pacific Service Corp., 248 U.S. 372 (1919) 7

Vermont Yankee Nuclear Power Corp. v. NRDC, 435 U.S. 519 (1978) 5, 14

Vermont Yankee, In the Matter of, 4 AEC Reporter 75 (1978) 12

Wisconsin Michigan Power Company, In the Matter of, 4 AEC Reporter 3 (1978) 12

Constitutional Provisions:

California Constitution, Article 12, § 6 7

United States Constitution, Amendment Ten 7

Statutes:

Atomic Energy Act:
Section 271, 42 U.S.C. § 2018 ..... 5, 9-11, 15, 16, 22
Section 274(K) 42 U.S.C. § 2021(k) 5, 10, 11, 13, 15, 16

California Public Resource Code, §§ 25506.5, 25518, 25518.5, 25519(h) 7

California Public Utility Code, § 1001 ..... 7, 11, 20

Page

Clean Air Act Amendments of 1977, Section 122, 42 U.S.C. § 7422 (Supp. III 1979) 10, 13

Public Utility Regulatory Policies Act, Public Law 95-617, 92 Stat. 3117 (1978) 22

National Energy Conservation Policy Act, Public Law 95-619, 92 Stat. 3206 (1978) 22

Miscellaneous:

Draft Generic Environmental Impact Statement on Handling and Storage of Spent Light Water Power Reactor Fuel, NRC, NUREG-0404 (March 1978) 19

Joint Committee on Atomic Energy, Hearings on S.3323 and H.R. 8862, 83rd Cong., 2d Sess. 84 (1954) 9, 12

Joint Committee on Atomic Energy, Hearings before the Subcommittee on Legislation, 89th Cong., 1st Sess. 172 (1965) 11

Joint Economic Committee, Hearings before the Subcommittee on Energy, 94th Cong., 2d Sess. 58 (1976) 10

Nuclear Power Costs, H. Rep. No. 95-1090 (1978) 19

The Need for Power and the Choice of Technologies: State Decisions on Electric Power Facilities, USDOE, DOE/EP/10004-1 (1981) 14

IN THE

Supreme Court of the United States

OCTOBER TERM, 1982

No. 81-1945

PACIFIC GAS AND ELECTRIC COMPANY, ET AL.,
Petitioners,

v.

STATE ENERGY RESOURCES CONSERVATION AND DEVELOPMENT COMMISSION, ET AL.,
Respondents.

ON WRIT OF CERTIORARI TO THE UNITED STATES COURT OF APPEALS FOR THE NINTH CIRCUIT

JOINT BRIEF FOR THE PUBLIC UTILITIES COMMISSION OF THE STATE OF CALIFORNIA AND THE NATIONAL ASSOCIATION OF REGULATORY UTILITY COMMISSIONERS AS AMICI CURIAE SUPPORTING AFFIRMANCE

INTEREST OF AMICI CURIAE

The Public Utilities Commission of the State of California (CPUC) and the National Association of Regulatory Utility Commissioners (NARUC) file this joint brief as *amici curiae* urging affirmance due to the substantial harm a reversal of the decision below will have upon the effectiveness of the regulation of electric utilities by State regulatory commissions. The CPUC and the NARUC file

this brief with the written consent of the petitioners and respondents.

The CPUC is an administrative agency established under the Constitution and Laws of the State of California. Among its duties, it exercises general regulatory jurisdiction over the siting of power plants outside of the State of California and shares regulatory jurisdiction over the siting of power plants within California with the State Energy Resources Conservation and Development Commission (ERCDC). The CPUC also has jurisdiction over the service, rates and charges established by nuclear utilities operating within California. The CPUC is authorized to represent the people of the State of California in proceedings of this nature.

The NARUC is a quasi-governmental nonprofit organization founded in 1889. Within its membership are the governmental bodies of the fifty States, and the governmental agencies of the District of Columbia, Puerto Rico, and the Virgin Islands, engaged in the regulation of utilities and carriers. The CPUC is a member of the NARUC. The mission of the NARUC is to serve the public interest by seeking to improve the quality and effectiveness of public regulation in America.

More specifically, the NARUC contains the State officials charged with the duty of regulating electric utility companies within their respective borders. As such, these officials have the obligation to assure the establishment of electric utility services and facilities as may be required by the public convenience and necessity, and the furnishing of dependable service at rates that are just and reasonable. The State regulatory commissions are the creatures of their respective legislatures, established to regulate utilities

exercising monopoly powers within their service territories.

The decision which is under attack in this proceeding, *Pacific Legal Foundation v. State Energy Resources Conservation and Development Commission,* 659 F.2d 903 (9th Cir. 1981), firmly establishes a State's right to review all matters relating to the construction and operations of a nuclear plant for the purpose of determining whether such a plant is an economical and reliable source of energy. If this ruling falls, the traditional authority of the State regulatory commissions over nuclear power plants would be gravely threatened. Further, no regulatory agency at the Federal or State level would have authority to examine issues relating to the costs of constructing and operating a nuclear power plant or its anticipated reliability as a power source. Simply stated, the resolution of the issues raised in this case will affect State regulatory authority nationwide.

SUMMARY OF THE ARGUMENT

The issue presented the Court in this case is whether the State of California, or any other State, may condition the construction of a nuclear generating station by a privately-owned electric utility upon a finding that adequate and economical methods exist to store and dispose of spent nuclear fuel and high-level nuclear waste. Petitioners Pacific Gas and Electric Company (PG&E) and Southern California Edison Company (SCE) argue in their brief on the merits that California is constitutionally prohibited from establishing such conditions. The Solicitor General as *amicus* joints this argument.

1. The CPUC and the NARUC submit that the preemption argument advanced by Petitioners and the Solicitor General must fall. As the court below determined, the

Atomic Energy Act does not preempt State regulation of nuclear power for purposes other than protection against radiological hazards. Decisions of this Court, other Federal and State courts, and the Nuclear Regulatory Commission support this conclusion. This Court must reaffirm the intent of Congress that the power of the States to determine whether nuclear generating stations are necessary, economical or reliable should be unrestricted.

2. From a public policy perspective, the decision below must be affirmed. Given the extraordinary capital costs represented by the construction of a nuclear generating station, it is imperative that some governmental agency review the economics of nuclear power production prior to the time irreversible decisions are made to proceed with such construction. If accepted, the Petitioners' preemption argument would create a situation in which certain economic consequences of nuclear plant construction would be unreviewed and unreviewable at either the State or Federal level. To avoid the creation of such a regulatory vacuum, this Court should affirm the decision below.

ARGUMENT

I. THE ATOMIC ENERGY ACT RESERVES TO THE STATES REGULATORY AUTHORITY OVER THE CONSTRUCTION AND OPERATION OF NUCLEAR POWER PLANT EXCEPT AS TO QUESTIONS OF RADIOLOGICAL SAFETY

Although the longstanding interpretations of the Atomic Energy Act (the Act) by the courts and the Atomic Energy Commission (AEC) (now the Nuclear Regulatory Commission (NRC)) allow States to regulate all matters involved in the construction and operation of nuclear power plant except radiological safety, Petitioners and the

Solicitor General of the United States as *amicus* would have this Court find that the entire history of commercial nuclear power to date has completely ignored the congressionally mandated separation of power between Federal and State governments in this area. Indeed, according to Petitioners and the Solicitor General, the Federal government should have been denying autonomy to the States on the electric power question whenever nuclear power was the contemplated energy source. This conclusion is based on the ostensible fact that Congress in the Atomic Energy Act mandated that nuclear power plants be used to meet the nation's energy needs and thus the Act necessarily preempted for exclusive Federal regulation all matters relating to the construction and operation of nuclear plants. Under this scheme, States have no role in regulating or even inquiring into any matter concerning the construction and operation of a nuclear power plant. The NRC would be the sole governmental agency regulating all matters related to the construction and operations of a nuclear power plant.

While such a result might be politically convenient to Petitioners in the 1980's, it was not the law in 1954 under the Atomic Energy Act, nor is it the law today. Instead Congress, in passing the Act in 1954 and in subsequent amendments, clearly articulated the position that while the Federal government shall regulate the radiological safety aspects involved in the construction and operation of a nuclear plant, States are to retain the primary responsibility for determining questions of need, reliability, cost and other traditional State concerns. (Section 271 of the Act, 42 U.S.C. Sec. 2018; Sec. 274(k) of the Act, 42 U.S.C. Sec. 2021(k)). This interpretation has been upheld by the United States Supreme Court (*Vermont Yankee Nuclear Power Corp. v. NRDC*, 435 U.S. 519 (1978)); several

Federal appellate courts (*New Hampshire v. AEC,* 406 F.2d 170 (1st Cir. 1969), *cert. denied,* 395 U.S. 962 (1969)); *Cities of Stateville, et al. v. Atomic Energy Commission,* 441 F.2d 962, 975-96 (D.C. Cir. 1969); *Calvert Cliffs' Coordinating Committee v. AEC,* 449 F.2d 1109 (D.C. Cir. 1969); *Northern States Power Co. v. Minnesota,* 447 F.2d 1143 (8th Cir. 1971), *aff'd mem.,* 405 U.S. 1035 (1972); State courts (*Northern California Association to Preserve Bodega Head and Harbor, Inc. v. California Public Utilities Commission,* 61 Cal.2d 126, 133 (1964); *Marshall v. Consumer Power,* 65 Mich. Appl. 237, 237 N.W.2d 266, 280 (1976)); and numerous NRC decisions. Further, a review of the legislative history and the actual wording of the Act point out that Congress meant to *encourage* the use of nuclear power to generate electricity and did not intend to *mandate* it.[1]

In this proceeding, this Court should reject the requests of Petitions and *amicus* the Solicitor General, and instead should affirm a State's right to decide whether nuclear power is the most economical and reliable source of energy available. In making this crucial decision States should be allowed to consider all relevant factors including the economic costs and reliability of storage and disposal of nuclear waste. (*Pacific Legal Foundation v. State Energy Resources, etc., supra* at 926).

---

[1] *Pacific Legal Foundation v. State Energy Resources Conservation & Development Commission,* 659 F.2d 903 (9th Cir. 1981). See Ninth Circuit discussion of the intent of Act, at 926-27.

A. The Extent And Manner Of A State's Reliance On Nuclear Power As A Source Of Electrical Generating Capacity Has Historically Been Regulated By States Through Their Reserved Police Power.

As part of their police powers, States, either through statutory enactment or by constitutional provisions,[2] have traditionally determined whether any proposed new electric plant, including a nuclear facility, is in the financial interests of the ratepayer and the utility, and whether the plant will provide reliable service. This function has traditionally been carried out by regulatory bodies charged with ensuring that there is adequate and cost-effective electric service. (Tenth Amendment, United States Constitution). *FPC v. Hope Natural Gas,* 320 U.S. 591, 625 (1944); *Union Dry Goods Co. v. Georgia Pacific Service Corp.,* 248 U.S. 372, 374-75 (1919); *Munn v. Illinois,* 94 U.S. 77 (1886).

In general, when a utility wants to build a plant, it applies for authority from a State regulatory agency.[3] The State agency then reviews whether the plant is needed and in the economic interest of both the ratepayers and the utility. Generally, the review includes a detailed analysis of the cost of construction and operation of the plant, and its anticipated reliability. If the State finds everything in order, it then authorizes the construction of the plant. In the case of a nuclear plant, additional Federal licensing re-

---

[2]For example, the CPUC gets its authority both from a constitutional provision (Article 12, Section 6 of the California Constitution) and through statutory provisions (California Public Utilities Code, Section 1001).

[3]In California the CPUC's regulatory proceedings are coordinated with those of the ERCDC. See Sections 25506.5, 25518, 25518.5 and 25519(h) of the Calif. Pub. Resource Code.

quirements must also be met. When a utility seeks Federal approval, a State continues to be able to monitor the costs of constructing the plant and has the authority to cancel the plant if it becomes too expensive. Once the plant is built and becomes operational, States then put the capital costs of the plant into the utility's rate base which allows the utility to earn a rate of return on its investment in the facility.

In contrast, Petitioner and *amicus* the Solicitor General claim that in the case of a nuclear plant, State commissions only have authority to decide the question of whether the power to be generated is needed (Pet. Br. at 33). Issues related to whether a nuclear plant would be the most economical or reliable form of energy are removed from a State's jurisdiction. If this were actually the case, a State would be subject to a unilateral decision of a utility to build a nuclear plant, but then would be responsible for putting the capital costs of the plant, over which it has had no control, into the utility's rate base. Such "after the fact" regulation of "rates and services" ignores the fact that historically, States have always made "before the fact" determinations regarding the "costs and reliability" of any potential power source. If a State believes a power source is too expensive or unreliable it is free to reject it.

Thus, State authority exercised under its police powers is based on the premise that a State has unique knowledge of its local problems, concerns and needs. The U.S. Supreme Court, acknowledging this State concern, has held that when a State is exercising its historic police powers, a Federal statute cannot be said to preempt unless there is a "clear and manifest purpose of Congress." *Rice v. Santa Fe Elevator Corp.*, 331 U.S. 218, 229 (1947). The Court went on to say that the Federal purpose can be manifest in either pervasive Federal regulation or in a

Federal interest so dominant that the Federal system of regulation will be assumed to preclude enforcement of State laws on the same subject. *Rice v. Santa Fe Elevator Corp., supra,* at 230, *Huron Cement Co. v. Detroit,* 362 U.S. 440, 443 (1960). No such finding can be made in this case. (*Pacific Legal Foundation v. State Energy Resources, etc., supra.*)

B. The Atomic Energy Act Clearly Supports The Continuation Of State Authority To Determine Whether A Nuclear Power Plant Is An Economically Feasible And Reliable Source Of Energy.

The Atomic Energy Act specifically reserves to the States in Section 271 (42 U.S.C. Sec. 2018) the right to determine whether nuclear power would be used to generate electricity in a State.

Section 271 reads:

> "Nothing in this chapter shall be construed to affect the authority or regulations of any Federal, State, or local agency with respect to the generation, sale or transmission of electric power produced throught the use of nuclear facilities licensed by the Commission."[4]

Section 271 clearly allows States to determine whether or not to approve any plant (nuclear or otherwise) by comparing all of the short and long-term costs with those of other energy sources. See 100 Cong. Rec. 12015-16,

---

[4]The legislative history of this amendment supports the interpretation advocated above. See hearings on S.3323 and H.R. 8862 to amend the AEA of 1946 before the Joint Committee on Atomic Energy, 83rd Congress, 2nd Session. 642-43 (1954).

12197-200 (1954); *Pacific Legal Foundation v. State Energy Resources, etc., supra,* at 920. After all, "[e]nergy is only a means to economic well being, not the end product. If a fuel becomes overly expensive, or unavailable, then common business sense dictates that the thing to do is replace it with the lowest cost substitute." (Energy Conservation: Hearing before the Subcomm. on Energy of the Joint Economic Committee, 94th Cong., 2d Sess. 58 (1976) (Statement of Frank Zarb, Administrator, Federal Energy Agency).) Thus, States under Section 271 can limit their commitment to nuclear power if they believe that the ultimate costs are too high, or even if ultimate costs are unknown.

The only limitation on State regulatory authority is that it cannot review a matter solely from a radiological safety viewpoint.[5]

Section 274(k) (42 U.S.C. 2021(k) states:

> "Nothing in this section shall be construed to offset the authority of any state or local agency to regulate activities [of AEC licensees] for purposes other than protection against radiation hazards."[6]

Congress in Section 271 and 274(k) "intended to preempt only state regulation of radiation hazards associated with nuclear power and not state regulation for other purposes." (*Pacific Legal Foundation v. State Energy Resources, etc., supra* at 922). Thus, States do have authority under their police powers to consider the

---

[5]Except for the Clean Air Act Amendments of 1977, Section 122, 42 U.S.C. Sec. 7422 (Supp. III 1979).

[6]See S. Rep. No. 870, 86th Cong., 1st Sess. 12 (1959) for supportive legislative history.

cost and reliability aspects of matters such as the storage and ultimate disposal of nuclear waste. If a State believes that the costs are too high in the short-term or long-term or that problems with nuclear waste storage or disposal cause reliability concerns, it can reject the nuclear option.

The Solicitor General in his brief does acknowledge that Sections 271 and 274(k) allow States to put conditions on a certificate of public convenience and necessity for a new nuclear plant relating to the excessive costs of nuclear waste disposal and storage. (See Cal. Pub. Util. Code Sec. 1001 (West Supp. 1982)). However, according to the Solicitor General, States cannot block a plant on this basis if the NRC decides at the conclusion of its proceedings "that adequate means of storage and disposal are or will be available in time to prevent any radiation hazard which might otherwise be posed by waste generated at the plant." (Sol. Gen. Br. at 25). Since the NRC never deals with cost in its proceedings, apparently cost is not a bottom line factor that *any* regulatory agency can consider.

Both the NRC, its predecessor, the AEC, and the Petitioners in this case[7] for the last 28 years have interpreted Sec. 271 and Sec. 274(k) of the Act as limiting the NRC's regulatory investigation of nuclear plants to radiological

---

[7]The Justice Department and the AEC stated in 1965 that Section 271 of the Act which preserves State authority was written to make clear a Congressional purpose to leave regulated public utilities which are licensed to use nuclear power fully subject to traditional State regulatory authority, "so as not to give them an advantage over other public utilities, thus preserving the historical [State] powers over utilities." Comments of Justice Department and AEC on H.R. 8443, H.R. 8444 and S. 2035, reprinted in proposed amendments to section 271 of the AEA of 1954: Hearings before the Subcommittee on Legislation of the Joint Committee on Atomic Energy, 89th Congress, 1st Sess. 172 (1965).

safety issues involved with the construction and operation of a nuclear power plant.[8]

It is ironic that only now, as the nuclear industry faces substantial problems because of excessive cost overruns at several new plants, it is attempting to revitalize itself by seeking out a more friendly regulator or, in the cost and reliability areas, no regulator at all. Specifically, neither the NRC nor any other Federal agency currently conducts a searching analysis of the impact on ratepayers of construction or operation of a nuclear power plant. Instead, if these issues are reviewed at all it is from the standpoint of their relationship to radiological hazards. (Affidavit of Dale G. Bridenbaugh, J.A. 465).[9] As Mr. Lewis L. Strauss, Chairman of the AEC in 1954, said at that time,

> "The [AEC] has no special competence in the field of electric energy distribution."[10]

The court in *Cities of Stateville v. Atomic Energy Commission, supra,* at 975, agreed when it noted that the AEC

---

[8]*In the Matter of Long Island Lighting Company,* 9 NRC 51 52-53 (1979); *In the Matter of Vermont Yankee,* 4 AEC Reporter 75, 78-79; *In the Matter of Wisconsin Michigan Power Company,* 4 AEC Reporter, 3, 6 fn. 3; *Southern California Edison Co. (San Onofre Nuclear Generating Station, Units 2 and 3)* ALAB-171, 7 AEC 37, 39 (1974); *Midland Plant Units 1 and 2,* ALRB-458, 2 Nuc. Reg. Reporter (CCH) Sec. 30, 271 at 30, 271.04) (Feb. 14, 1978); *Consolidated Edison Co. of New York City (Indian Point Station, Unit 2),* 7 NRC 31, 34 (1978).

[9]J.A. refers to Joint Appendix.

[10]Comments of Lewis L. Strauss, Chairman AEC before Congress in 1954. (Hearings before the Joint Committee on Atomic Energy on S. 3323 and H.R. 8862 to amend the Atomic Energy Act of 1946, 83rd Cong., 2d Sess. 84 (1954) at page 566.

"concerns itself not with economic feasibility but with practical development and application of nuclear energy." (Also cited in *Pacific Legal Foundation v. State Energy Resources, etc., supra* at 922).

Further, while the specific issues raised in this appeal, namely, whether Congress mandated the commercial use of nuclear power regardless of a State's economic misgivings, is one of first impression, several courts, both State and Federal, have touched on this issue. The case that is relied on by the Petitioners and the Solicitor General, *Northern States Power Co. v. Minnesota, supra,* in fact supports the position taken by this brief. Obviously, the Petitioners and the Solicitor General in citing the *Northern States* case failed to fully consider the reasoning of the court in that case.

Northern States involved the question of whether a State could determine a radiological safety issue as it related to air pollution. The court held that the State regulation was in conflict with Federal law and therefore must fall. In justifying its holdings, the court cited Section 274(k) of the Act for the proposition that, while other issues could be decided by the States, radiological safety could not. The statement at the end of the *Northern States* opinion concerning Federal authority over construction and operation, upon which Petitioners and the Solicitor General apparently rely, clearly relates to the area of radiological safety and does *not* support the sweeping ends to which Petitioners and the Solicitor General would apply it. *Pacific Legal Foundation v. State Energy Resources, etc., supra* at 923. It should also be noted that the actual holding of this case has been overturned by Congress. States now *do* have authority to regulate air pollution caused by radiation from nuclear power plants. (Clean Air Act Amendments of 1977, *supra*).

Other cases that support the CPUC's and the NARUC's position in this regard are *Vermont Yankee Nuclear Power Corp. v. NRDC, supra,* in which the U.S. Supreme Court stated "the Commission's prime area of concern in the licensing context. . . is national security, public health, and safety." *Id.* at 550. The Court went on to say "[t]ime may prove wrong the decision to develop nuclear energy, but it is Congress or the States within their appropriate agencies which must eventually make the judgment." *Id.* at 558. (Emphasis supplied.)

Federal appellate courts have also touched on this issue. One stated that the history of the 1954 legislation "reveals that the Congress, in thinking of the public's health and safety, had in mind only the special hazards of radioactivity." *New Hampshire v. Atomic Energy Commission, supra.* (This case held that the AEC does not have jurisdiction over thermal pollution in the Connecticut River as a result of the discharge of cooling water of a nuclear plant). In *Cities of Stateville, et al. v. Atomic Energy Commission, supra,* the court found that the AEC has jurisdiction only over considerations "involving the common defense, security and protection of the health and safety of the public. S. Rep. No. 390, 89th Cong., 1st Sess. 4 (1965)." *Id.* at 975-76.

Finally, State courts have also found that Federal jurisdiction is limited to radiological safety. *Northern California Association to Preserve Bodega Head and Harbor, Inc. v. PUC, supra.* Also see *Marshall v. Consumer Power, supra.*

The weight of the clear language of the statute, the NRC's interpretation of its jurisdiction in past decisions, the current practice of the industry, as well as the holdings of the U.S. Supreme Court, Federal appellate courts and

State courts all support the proposition that the States may continue to regulate nuclear power plants as long as that regulation does not involve radiological safety issues.

More specifically, in their review of financial and reliability matters, States are not restricted to issues that the NRC does not consider when regulating radiological safety. It would be incredible to suggest that Federal law required that the States be kept in the dark on fundamental issues that the Federal government examines (such as nuclear waste) simply to avoid duplication. After all, the States are not attempting to duplicate or displace NRC authority, but rather to carry out their own proper regulatory authority. As the court below found, California has the right to decide to build nuclear power plants based on a finding "that uncertainties in the nuclear fuel cycle make nuclear power an uneconomical and uncertain source of energy. . . [S]uch a choice is expressly authorized under Sections 271 and 274(k) of the Atomic Energy Act of 1954." (659 F.2d at 925).

Thus, the Petitioners and the Solicitor General have failed to negate the strong presumption in favor of a State's regulation of matters under its traditional police power and authority, and have failed to show that the Act did *not* leave to the State commissions the authority to determine whether a nuclear plant will best meet a State's need for reliable, cost-effective, and reasonably priced sources of electrical energy.

II. IF STATES NO LONGER HAVE REGULATORY JURISDICTION OVER COST AND RELIABILITY MATTERS, A REGULATORY VACUUM WILL BE CREATED WHICH IS INCONSISTENT WITH BOTH THE SPIRIT AND LANGUAGE OF THE ATOMIC ENERGY ACT

Currently, the NRC plays no role in regulating nuclear generation from the standpoint of assuring a reliable supply of electricity at a reasonable cost. (Affidavit of Dale G. Bridenbaugh, J.A. 465.) In fact, the NRC generally looks at a utility's financial qualifications only to assess its ability to conduct licensed activities in a manner that would not unduly expose the public to radiation risks. (Affidavit of Harold Green, R.86).[11] Consequently, other economic and reliability questions which relate to the construction and operation of a nuclear power plant and long range resource planning are beyond that agency's control and influence. (Affidavit of Dale G. Bridenbaugh, J.A. 465). If a State were prevented from both reviewing the NRC construction and operational requirements in connection with the State's own economic and reliability analysis and from ultimately refusing to allow a nuclear power plant to be built for any reason whatsoever, no governmental agency on the Federal or State level would be able to determine the all-important question of whether a proposed nuclear plant is cost-effective and reliable in comparison to alternative technologies. Such a result is unacceptable, and is clearly contrary both to the explicit language in the Atomic Energy Act (Sec. 271, 42 U.S.C. 2018; Sec. 274(k), 42 U.S.C. 2021(k)), and to the legislative history of the Act. (See Part I, *supra.*) Additionally, it is hard to believe

[11]These affidavits and other documents that have not been included in the appendix for the writ of certiorari or the joint appendix will be referenced to the district court docket control number which is contained in the Joint Appendix at 28-35.

that Congress would intend such a result. After all, both cost and reliability are two of the most troubling variables facing the nuclear power industry.[12]

Thus, it is essential that an independent State review of both the economic and reliability aspects of a proposed nuclear power plant as well as alternative technologies be conducted. Without such a review, a state of "nuclear laissez-faire" will exist in which the utility executives will be in the position to decide unilaterally whether a proposed nuclear power plant is cost-effective, reliable and in the best interests of the ratepayer and the utility. One can imagine that if this situation were allowed to prevail, a State might be faced with a utility demand that a nuclear power plant, which could cost more than an equivalent alternate energy source, be issued a certificate of public convenience and necessity (and at a later date be put in the utility's rate base) without the State ever being able to review the matter to determine if the utility was acting reasonably and in the public interest.

If one examines the tremendous costs that utilities are paying for the current construction and operation of all power plants, including nuclear power plants, it is clear that much is at stake. Currently, it is estimated that a 1000 megawatt unit whether nuclear or an alternative technology will cost at least $1 billion. More specifically in the nuclear area, the cost of construction of a nuclear plant is rising faster than the rate of inflation. (Declaration of Dale Bridenbaugh, J.A. 407). For example, Petitioner PG&E is building a nuclear reactor at Diablo Can-

[12]For example, in the past, utilities' cost projections for nuclear power plant construction and operations have been notably unreliable. Further unexpected shutdowns have occurred at nuclear plants which force the utility to buy power from other sources. (Declaration of Dale Bridenbaugh, J.A. 463).

yon. In 1967 and 1968, when the CPUC issued the necessary certificate of public convenience and necessity, PG&E estimated that units 1 and 2 would cost $371 million to build. In 1980, thirteen years later, neither of Diablo Canyon's units was operational because of delays prompted by NRC's safety concerns, and PG&E had spent approximately $1.9 billion. Today, Diablo Canyon is still not operational, and PG&E has recently estimated to the CPUC that the price tag will be approximately $3.1 billion if both units of Diablo Canyon become operational in 1983. Because of this enormous investment, which is not in the utility's rate base since the plant is not operational, PG&E's financial condition has been questionable in the past. (Deposition of Ray Czahar, R. 144). Similarly, Petitioner SC&E was 300% over the originally estimated cost for the construction of San Onofre Units 2 and 3 in 1980. As a result, SC&E in 1980 was in questionable financial shape. (Deposition of Ray Czahar, R. 144). Of course, once these plants become operational, the prudent costs will then be recovered from ratepayers. Indeed, recent experience has shown that setbacks such as unduly long construction periods or complete shutdowns because of safety hazards are always possible with nuclear plants.

Beyond the experience that has built up over the years regarding the costs of constructing nuclear plants, there are other foreseeable problems that must be reviewed when considering the nuclear option. For example, the projected cost of the disposal and storage of nuclear material generated by a plant is an area of great concern. Currently, nuclear plants in general store most of their nuclear waste at the power plant site, because there is a lack of offsite storage plants to receive the spent fuel. It is predicted that if the on-site storage space fills up and no

other facilities are available to store the fuel, the reactor will have to be shut down to ease the problems of disposal of spent fuel. Twelve States have nuclear reactors where on-site storage space is already full or will be full in the next few years.[13] (Declaration of Dale Bridenbaugh, J.A. 749, quoting NRC *Draft Generic Environmental Impact Statement on Handling and Storage of Spent Light Water Power Reactor Fuel* [NUREG - 0404] March 1978, Table F4). At this time there is no ultimate waste disposal technology available and the cost estimates of radioactive waste disposal are not reliable. (Report of U.S. House of Reps. Committee on Govt. Operations "Nuclear Power Costs," House Report No. 95-1090) (R. 143).

Even though the NRC has concluded from a health and safety point of view that given the Federal government's intent to develop a method of permanent disposal, it plans to continue licensing new power reactors (Sol. Gen. Br. at), States still should be able to take this uncertainty as it relates to the ultimate cost of a plant into consideration when deciding on the nuclear alternative. Certainly the NRC does not examine the issue from this perspective.

In response to this State concern, the Solicitor General suggests that a State when setting rates should shift the risk of any shortfall in storage facilities for disposal of nuclear waste from the ratepayers to the stockholders. This solution ignores the basic fact that if a utility is not in healthy financial shape it may not be able to properly

---

[13]Wisconsin, Point Beach – 1 and 2, La Crosse and Kewaunee; Maine, Maine Yankee; Minnesota, Prairie Island – 1 and 2; California, San Onofre 1 and Humboldt Bay 3; South Carolina, Oconee 1, 2, and 3 and Robinson 2; Connecticut, Conn Yankee; Florida, Turkey Point 3 and 4; Nebraska, Fort Calhoun; New York, Indian Point 1 and 2; Maryland, Calvert Cliffs 1 and 2; Michigan, Palisades; Virginia, Surry 1 and 2.

carry out its obligation to provide power, and at the very least, its cost of capital will rise. Thus, ratepayers will be affected in any case. Review of the actual and potential costs of a nuclear power plant clearly demonstrates that a State's regulatory agency, the only governmental agency concerned with the ratepayer's interest, must be able to determine whether an investment such as a proposed nuclear power plant is in the interest of the State's ratepayers.

If this position is rejected by this Court, considerable confusion regarding State energy needs and resources would result. Currently, the Atomic Energy Act does not extend Federal authority into this area nor does it exclude the exercise of State authority. Most States currently conduct generalized long-range review of a utility's resource plan, which focus on economic and reliability issues.[14]

For instance, in California the CPUC has instituted an investigation into PG&E's resource plan, with particular emphasis placed upon the ability of a utility to finance proposed projects (Order Instituting Investigation 26). The CPUC has conducted this review because power plants are now extremely expensive and utilities must commit large amounts of money well in advance of a formal licensing process. Thus, the CPUC feels that an up-front and more generalized review of the ratemaking and financial implications of proposed projects will give a utility a better idea of what type of commitments it should make and will give the CPUC a more informed perspective from which to assess the utility's choices. (See California Public Utility Code § 1001). The basic information gathered in

---

[14]See United States Department of Energy, *The Need for Power and the Choice of Technologies: State Decisions on Electric Power Facilities*, DOE/EP/10004-1 (1981).

such a proceeding concerning the economic viability and reliability of different electric generating technologies will be used by the CPUC in determining whether to issue a certificate of public convenience and necessity for a specific project, and will also assist the CPUC in rate cases in making determinations regarding capital requirements and rate of return. However, if Petitioners' argument is accepted, a State would be forbidden from asking for any information about the factors involved in the construction and operation of a proposed nuclear plant in this context. Thus, the CPUC's long-range forecasting process would become useless, since a major component of a utility's resource plan would be out of reach. Since the Federal government does not conduct a similar study, an additional serious regulatory vacuum would be created.

It is hard to believe that Congress intended such a result which would utterly nullify those statutory and constitutional provisions in State law which attempt to ensure that a State's utilities provide reliable, cost-effective electric service. Petitioners would give utilities complete immunity and freedom from effective regulation. to the serious detriment of the public interest, without providing any alternative Federal framework within which to conduct this type of review.

III. STATES SHOULD NOT BE PREVENTED FROM PURSUING ENERGY GOALS, SUCH AS ENERGY CONSERVATION THROUGH THE RATESETTING MECHANISM

Petitioners' position if accepted would also have a serious impact on a State's ratemaking function. Although it is clear that States will continue to have authority over ratemaking, Petitioners' position appears to imply that a State could not exclude a nuclear plant from a utility's rate

base if the NRC approved it, because Congress assertedly mandated that nuclear power be used to generate electricity. Such a result seriously conflicts with two Federal laws, the Public Utility Regulatory Policies Act (PURPA) (Pub. Law 95-617, 92 Stat. 3117) which encourages States to promote energy conservation and efficiency in the setting of utility rates, and the National Energy Conservation Policy Act (NECPA) (Pub. Law 95-619, 92 Stat. 3206) which establishes programs to conserve energy and develop renewable energy sources in order to sustain long-term national economic growth. If a State has no choice as to whether a nuclear plant will be added to the rate base of a utility, it cannot possibly fulfill its commitment to the Federal goals established by these laws.

Since Section 271 of the Act (42 U.S.C. 2018) clearly points out that States may regulate the "generation, sale or transmission of electric power produced through the use of nuclear facilities licensed by the Commission," the NRC surely cannot side-step this authorization by forcing consumers in a State to pay for unwanted nuclear plants. Instead, it is clear that Congress meant to allow the States to determine for themselves what type of electrical generation should be pursued and ultimately supported by the ratepayer.

CONCLUSION

Under the Atomic Energy Act, States are not preempted from deciding the reliability and financial questions relating to the construction and operation of nuclear power plants. To find otherwise would drastically undermine a State's traditional regulatory role in ratemaking and related matters and be intolerable from the standpoint of sound public policy. Also, it would be clearly contrary

to reasonable interpretations of the relevant statutes by Federal appellate courts, State courts and the NRC. Thus, the CPUC and the NARUC respectfully request this Court to affirm the ruling of the Ninth Circuit below and thereby uphold a State's right to determine whether a proposed nuclear power plant is economical and reliable and in the interest of its citizens.

Respectfully submitted,

JANICE E. KERR
J. CALVIN SIMPSON
GRETCHEN DUMAS
5066 State Building
San Francisco, California 94102
(415) 557-0470

Attorneys for the Public Utilities Commission of the State of California

PAUL RODGERS,
General Counsel
CHARLES D. GRAY, Assistant General Counsel
DEBORAH A. DUPONT,
Deputy Assistant General Counsel
National Association of Regulatory Utility Commissioners
1102 Interstate Commerce Commission Building
Post Office Box 684
Washington, D.C. 20044

Attorneys for the National Association of Regulatory Utility Commissioners

Amicus Brief

15

Office - Supreme Court, U.S.
FILED
NOV 26 1982
ALEXANDER L. STEVAS,
CLERK

NO. 81-1945

In The
SUPREME COURT
Of The UNITED STATES
October Term, 1982

PACIFIC GAS AND ELECTRIC COMPANY and
SOUTHERN CALIFORNIA EDISON COMPANY,

Petitioners,

v.

STATE ENERGY RESOURCES CONSERVATION AND
DEVELOPMENT COMMISSION, et al.,

Respondents.

ON PETITION FOR A WRIT OF
CERTIORARI TO THE UNITED STATES
COURT OF APPEALS FOR THE NINTH CIRCUIT

BRIEF FOR THE STATE OF WASHINGTON AS
AMICUS CURIAE

KENNETH O. EIKENBERRY
Attorney General
EDWARD B. MACKIE
Chief Deputy
Attorney General

Temple of Justice
Olympia, Washington 98504
(206) 753-6207

NO. 81-1945

In The
SUPREME COURT
Of The UNITED STATES
October Term, 1982

PACIFIC GAS AND ELECTRIC COMPANY and
SOUTHERN CALIFORNIA EDISON COMPANY,

Petitioners,

v.

STATE ENERGY RESOURCES CONSERVATION AND
DEVELOPMENT COMMISSION, et al.,

Respondents.

ON PETITION FOR A WRIT OF
CERTIORARI TO THE UNITED STATES
COURT OF APPEALS FOR THE NINTH CIRCUIT

BRIEF FOR THE STATE OF WASHINGTON AS
AMICUS CURIAE

KENNETH O. EIKENBERRY
Attorney General
EDWARD B. MACKIE
Chief Deputy
Attorney General

Temple of Justice
Olympia, Washington 98504
(206) 753-6207

I N D E X

	Page
STATEMENT OF POSITION	1
INTEREST OF THE STATE OF WASHINGTON	2
DISCUSSION	4
CONCLUSION	7

Table of Authorities
Table of Cases

Huron Portland Cement Co. v. City of Detroit, 362 U.S. 440 (1960).	5
Rice v. Santa Fe Elevator Corp., 331 U.S. 218 (1947). . .	5
Vermont Yankee Power Corp. v. NRDC, 435 U.S. 519, 539 (1978).	4, 5, 6
Washington Bldg. and Construction Trades Council v. Spellman, No. 81-3453 (1982). .	3
Washington Bldg. and Construction Trades Council v. Spellman, 518 F. Supp. 928 (1982)	3

Washington Statutes

Chapter 117, Laws of 1911 . . .	2
Chapter 45, Laws of 1970, Ex. Sess.	2
Chapter 80.50 Revised Code of Washington.	2

United States Statutes

42 U.S.C. 2011 1
42 U.S.C. 2021(b) 4, 6

Texts and Other Authorities

Atomic Energy Act of 1954 . . . . 1, 4, 7

Low-Level Waste Policy Act of 1980 4

10 CRR, part 51, 47 F. Reg. No. 49, 1982 5

PL 96-573 4

§ 255.24.1(b), California 6

* * * * *

NO. 81-1945

IN THE SUPREME COURT OF THE UNITED STATES

OCTOBER TERM, 1982

PACIFIC GAS AND ELECTRIC COMPANY and SOUTHERN CALIFORNIA EDISON COMPANY,

Petitioners,

v.

STATE ENERGY RESOURCES CONSERVATION AND DEVELOPMENT COMMISSION, et al.,

ON PETITION FOR A WRIT OF CERTIORARI TO THE UNITED STATES COURT OF APPEALS FOR THE NINTH CIRCUIT

BRIEF FOR THE STATE OF WASHINGTON AS AMICUS CURIAE

STATEMENT OF POSITION

The State of Washington expresses no view on the question of whether the issue presented is ripe for judicial review. Washington's concern is with the issue of the nature and extent of preemption of state law which arise by virtue of the Atomic Energy Act of 1954 (42 U.S.C. §2011, et seq.). We submit such preeemption should be narrowly not broadly construed.

INTEREST OF THE STATE OF WASHINGTON

The State of Washington has long had an interest in the construction and operation of private electrical generation facilities since the costs for those facilities are ultimately borne by electrical consumers. Washington since 1911 (chapter 117, Laws of 1911) has regulated private utilities providing electrical energy to customers in the State of Washington. These interests of the State of Washington substantially parallel the state interests set forth in the amicus briefs by the State of Connecticut and Wisconsin. We will avoid an unnecessary duplication of those contentions and arguments.

Washington State does not have a moratorium on the construction of thermal nuclear plants for the generation of electical energy. Since 1970 when the Washington legislature created the State Energy Facility Siting Evaluation Council (chapter 45, Laws of 1970, Ex. Sess. ; chapter 80.50 Revised Code of Washington), energy facilities, which includes nuclear power plants, must obtain siting approval pursuant to that statute. Six proposed nuclear plants have obtained such approval. However, one applicant abandoned the project prior to the commencement of any construction, two plants were terminated after partial construction reflecting an indebtedness of $2,250,000,000. A fourth plant has now been placed in a status of no further construction occurring at this time. The other two plants are proceeding to

completion. One application is now pending with the State Energy Facility Siting Evaluation Council for the siting of a nuclear power plant by a private utility. The Washington state siting process provides for a full and complete evaluation of the proposed project, including consideration of environmental consequences. The successful operation of this state siting process, which includes some joint proceedings with the NRC, should not be imperiled by a broad construction of preemptive aspects of the Atomic Energy Act.

Washington is one of three states which serves as a depository for radioactive wastes produced throughout the nation. At the present time 54% of the national low-level nuclear wastes are delivered for storage to the State of Washington. Our state is the only recipient of radioactive wastes with absorbed liquids such as those which resulted from Three-Mile Island. The voters of this state by the passage of Initiative 383 in November, 1980, sought to prohibit as of July 1, 1981, the importation of nuclear wastes into the State of Washington (chapter 1, Laws of 1981). That enactment was declared unconstitutional by the United States District Court for Eastern Washington. 518 F. Supp. 928 (1981), which decision was recently affirmed by the Ninth Circuit Court of Appeals, Washington Bldg. and Construction Trades Council v. Spellman, No. 81-3453 (August 17, 1982). The State of Washington has not sought review of that determination to this Court and is directing its energies to an implementation of the compact

provisions of the Low-Level Waste Policy Act of 1980. PL 96-573, 42 U.S.C. 2021(b), et. seq.

As a major depository of nuclear wastes, we are cognizant, as is this Court, of nuclear waste produced by nuclear plants. This Court noted in Vermont Yankee Power Corp. v. NRDC, 435 U.S. 519, 539 (1978), that:

> Many of these substances must be isolated for anywhere from 600 to hundreds of thousands of years.

DISCUSSION

Congress, in enacting the Atomic Energy Act of 1954, struck a balance between state and federal power to regulate the development of nuclear power. Congress recognized the historical and continuing legitimate state interests (see Amicus Briefs of Connecticut and Wisconsin). The federal enactment provided in 42 U.S.C. 2021(k),

> Nothing in this section shall be construed to effect the authority of any state or local agency to regulate activities for purposes other than protection against radiation hazards.

This provision recognizes the state's regulatory authority to prevent nuclear plants from being built if the plants are inconsistent with the state's power needs, environmentally, or for other state interests. This also

acknowledges the state's power to enforce zoning laws and environmental standards particular to site selection for a nuclear plant.

In Vermont Yankee Power Corp., supra at 550, this Court declared:

> There is little doubt that under the Atomic Energy Act of 1954, state public utility commissioners are empowered to make the initial decision regarding the need for power [citations omitted]. The commission's principle area of concern in the licensing context on the other hand is national security, public health, and safety. (Supra at 550)

The NRC has tacitly admitted the state authority by the adoption of rules which eliminated any requirement for the applicant to establish a need for power that the project would produce. (Amendment to 10 CRR, part 51, 47 F. Reg. No. 59, March 26, 1982)

The state's police powers are not to be superseded unless some such preemption is the clear and manifest purpose of Congress. Rice v. Santa Fe Elevator Corp., 331 U.S. 218 (1947). Further, in light of the presumption in favor of the validity of state law, courts are not to seek out conflicts between state and federal regulation where none clearly exists. Huron Portland Cement Co. v. City of Detroit, 362 U.S. 440 (1960). There is no conflict between the

authority of the NRC to establish the requirements for a safety design and operation of a nuclear power plant and the authority of the state to determine if the site on which the proposed plant is to be constructed is an appropriate site in light of zoning and environmental concerns. The state's authority with reference to that siting decision is preserved by 42 U.S.C. 2021(k) previously quoted. It is axiomatic that in considering an appropriate site one must consider what use is to be made of the site. If the nuclear power plant is intended to be constructed and operated in a manner in which the nuclear waste is to be retained at the site of the power plant a different use is reflected than the operation of a power plant wherein the nuclear wastes are transported to another location. The California statute, § 25524.1(b) recognizes that the storage of nuclear wastes constitutes a use which is associated with, but separate from, the operation of a nuclear power plant. The nuclear power plant has a limited life expectancy. Thus, after a period of time, possibly 40 to 60 years, the plant may no longer be operating at a given site. However, as this Court noted in Vermont Yankee Power Corp., supra, at 339, the nuclear wastes resulting from such operations are such that they "must be isolated from anywhere from 600 to hundreds of thousands of years." Thus, the use of a site as a depository of nuclear wastes has a longer term potential on the use of that property than does construction and operation of the nuclear plant itself. Certainly the state's authority with reference to siting should be permitted to recognize

that consequence.

CONCLUSION

It was certainly not the intent of the Atomic Energy Act of 1954 to preclude the states from considering the question of the need for a nuclear plant producing electrical energy or the question of what may constitute an appropriate site for the construction of the same. We believe the Court of Appeals has properly construed the Atomic Energy Act and its decision should be affirmed.

DATED this 19th of November, 1982.

Respectfully submitted,

KENNETH O. EIKENBERRY
Attorney General

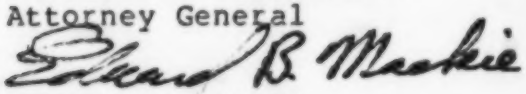

EDWARD B. MACKIE
Chief Deputy
Attorney General

Amicus Brief

16

Office - Supreme Court, U.S.
FILED
NOV 26 1982
ALEXANDER L. STEVAS
CLERK

No. 81-1945

IN THE

SUPREME COURT OF THE UNITED STATES

October Term, 1982

PACIFIC GAS AND ELECTRIC COMPANY and
SOUTHERN CALIFORNIA EDISON COMPANY,
Petitioners,

vs.

STATE ENERGY RESOURCES CONSERVATION AND
DEVELOPMENT COMMISSION, et al.,
Respondents.

ON WRIT OF CERTIORARI TO THE UNITED STATES
COURT OF APPEALS FOR THE NINTH CIRCUIT

BRIEF OF *AMICI CURIAE* STATE OF WISCONSIN, PUBLIC SERVICE COMMISSION OF WISCONSIN, STATE OF NORTH CAROLINA, STATE OF MISSOURI, COMMONWEALTH OF KENTUCKY, STATE OF NEW MEXICO, NEW MEXICO PUBLIC SERVICE COMMISSION, STATE OF IOWA AND COMMONWEALTH OF PENNSYLVANIA

BRONSON C. LA FOLLETTE*
Attorney General
STATE OF WISCONSIN
Post Office Box 7857
Madison, Wisconsin 53707
(608)266-1221

STEVEN M. SCHUR
Chief Counsel
PUBLIC SERVICE COMMISSION
OF WISCONSIN
463 Hill Farms State Office Building
4802 Sheboygan Avenue
Madison, Wisconsin 53702
(608)266-1264

OF COUNSEL

CARL A. SINDERBRAND
Assistant Attorney General
STATE OF WISCONSIN
Post Office Box 7857
Madison, Wisconsin 53707
(608)266-3936

BARBARA E. JAMES
Assistant Chief Counsel
PUBLIC SERVICE COMMISSION
OF WISCONSIN
463 Hill Farms State Office Building
4802 Sheboygan Avenue
Madison, Wisconsin 53702
(608)266-1264

RUFUS L. EDMISTEN
Attorney General
STATE OF NORTH CAROLINA
Post Office Box 629
Raleigh, North Carolina 27602
(919)733-3377

JOHN ASHCROFT
Attorney General
STATE OF MISSOURI
Post Office Box 899
Jefferson City, Missouri 65102
(314)751-3321

STEVEN L. BESHEAR
Attorney General
COMMONWEALTH OF KENTUCKY
Room 116, Capitol Building
Frankfurt, Kentucky 40601
(502)564-2200

RICHARD H. LEVIN
Attorney General
STATE OF NEW MEXICO
Post Office Drawer 1508
Santa Fe, New Mexico 87503
(505)982-6000

GEOFFREY W. SLOAN
Staff Attorney
NEW MEXICO PUBLIC
SERVICE COMMISSION
Bataan Memorial Building
Santa Fe, New Mexico 87503
(505)827-3361

THOMAS J. MILLER
Attorney General
STATE OF IOWA
Hoover State Office Building
Des Moines, Iowa 50319
(515)281-8373

JAMES R. MARET
Commerce Counsel
IOWA STATE COMMERCE
COMMISSION
Lucas State Office Building
Des Moines, Iowa 50319
(515)281-5984

LEROY S. ZIMMERMAN
Attorney General
COMMONWEALTH OF
PENNSYLVANIA
505 Executive House
Post Office Box 2357
Harrisburg, Pennsylvania 17120
(717)787-3391

ISSUE PRESENTED

Whether Congress intended, by enactment of the Atomic Energy Act of 1954, as subsequently amended, to preempt the entire spectrum of potential regulation of the construction of nuclear electric generating facilities, so as to bar state regulation of non-radiological aspects of the generation, sale or transmission of electric power from nuclear power plants, authority which has traditionally been reserved to the states.

* Counsel of Record

TABLE OF CONTENTS

Page

STATEMENT OF INTEREST OF THE STATE OF WISCONSIN AND PUBLIC SERVICE COMMISSION 1

STATEMENT OF INTEREST OF THE STATE OF NORTH CAROLINA 3

STATEMENT OF INTEREST OF THE STATE OF MISSOURI 4

STATEMENT OF INTEREST OF THE COMMONWEALTH OF KENTUCKY 5

STATEMENT OF INTEREST OF THE STATE OF NEW MEXICO 7

STATEMENT OF INTEREST OF THE STATE OF IOWA 8

STATEMENT OF INTEREST OF THE COMMONWEALTH OF PENNSYLVANIA 11

SUMMARY OF ARGUMENT 11

ARGUMENT 12

I. The Atomic Energy Act Does Not Preempt State Regulation Of Nuclear Power Generation 12

A. The state's historical regulation of the addition of generating plants to utility electric systems cannot be displaced absent clear and manifest intent by Congress 12

Page

B. Congress did not intend to preempt state regulation of the nuclear industry 14

C. The Atomic Energy Commission and Nuclear Regulatory Commission have interpreted the Atomic Energy Act as being concerned only with radiological health and saftey and the common defense. 19

II. State Regulation Of Electricity Generation, Including Electricity From Nuclear Sources, Is An Integral Element Of Its Traditional Regulation Of Public Utilities. 21

A. States have properly exercised their traditional regulatory powers to disallow electric generation development which was unneeded, environmentally unacceptable, or uneconomical, using standards which have been applied uniformly to nuclear and non-nuclear proposals. 21

B. Preemption of state regulation of the non-radiological aspects of atomic energy generation would imperil the states' ability to regulate other sources of electricity and would create a regulatory vacuum. 24

CONCLUSION 26

CASES CITED

Page

Central Hudson Gas & Electric Corp. v.
Public Service Comm.,
447 U.S. 557 (1980) 14

Huron Portland Cement v.
City of Detroit,
362 U.S. 440 (1960) 18

In the Matter of Vermont Yankee,
Docket No. 50-271,
December 8, 1967,
4 AEC Reporter, pp. 48-50 19

In the Matter of Wisconsin
Michigan Power Company
Docket No. 50-166,
4 AEC Reporter 3, 1969 20

Jackson v. Metropolitan Edison Co.,
419 U.S. 345 (1974) 14

Marshall v. Consumers Power Co.,
237 N.W.2d 266, 82 ALR3d 729
(Mich. App. 1975) 18

Maun v. United States,
347 F.2d 970 (9th Cir. 1965) 15

Pacific Legal Foundation v.
State Energy Resource, etc.,
659 F.2d 903 (9th Cir. 1981) 17

Public Service Company of
New Hampshire v. U.S. NRC,
582 F.2d 77 (1st Cir. 1978),
cert. denied, 439 U.S. 1046 15

Rice v. Santa Fe Elevator Corp.,
331 U.S. 218 (1947) 12,14

Page

State of New Hampshire v. Atomic Energy Commission, 406 F.2d 170 (1st Cir. 1969), *cert. denied,* 395 U.S. 962 16,20

State ex rel. Utility Consumers Council of Missouri v. Public Service Commission, 562 S.W.2d 688 (Mo. 1978), *cert. denied,* 439 U.S. 866 16

Vermont Yankee Nuclear Corp. v. NRDC, 435 U.S. 519 (1978) 16,20

Westinghouse Electric Corporation v. NRC, 598 F.2d 759 (3d Cir. 1979) 21,25

OTHER AUTHORITIES CITED

47 Fed. Reg. 13750-13755 (March 31, 1982) 8

Black's Law Dictionary 1067 (4th ed. 1968) 17

Docket No. 05-EP-1, *Advance Plans for Construction of Facilities as Filed with the Commission for Review and Approval Pursuant to Section 196.491, Wis. Stats.* 21

807 Kentucky Administrative Regulations Service 5:001, Sec. 8 6

Sup. Ct. R. 42(4) 1

STATUTES CITED

Page

California Statutes

Cal. Pub. Res. Code

§25524.1(b) 12

§25224.2 12,18

Iowa Code

§476A (1981) 9,10

§476A.2 9

§476A.6 9

Kentucky Revised Statutes

sec. 278.016 6

278.020 6

278.025 6

New Mexico Statutes Annotated

§14-1-8.1 (1978) 7

§14-1-8.2 7

§14-4A-3 7

§62-8-1 7

§62-8-2 7

General Statutes of North Carolina

Ch. 62 sec. 62-110.0 3

sec. 62-2 4

Page

Wisconsin Statutes and Wisconsin Administrative Code

ch. 147 23
184 13
196 13
1.11 13
PSC 2.90 (1) (a) 13
320.07 13
NR 150.03 (1) 13
196.03 (1907) 13
196.05 24
196.06 24
196.09 13
196.20 13
196.37 13
196.49 (1931) 12,23
196.491(2) 12
196.491(3) 13

United States Statutes

42 U.S.C. §2011, *et seq.* (1970) (Atomic Energy Act) ..... passim
42 U.S.C. §2018, sec. 271 15
42 U.S.C. §2021, sec. 274(a)(2) (1970) 15
42 U.S.C. §2021, sec. 274 (b) (1970) 15
42 U.S. C. §2021, sec. 274(c) (1970) 15

Page

42 U.S.C. §2021, sec. 274(d) (1970) 15

42 U.S.C. §2021, sec. 274(g) (1970) 15

42 U.S.C. §2021, sec. 274(k) (1970) 15,24

42 U.S.C. §2133 21

CONSTITUTIONAL AUTHORITY

Wisconsin Constitution,
art. IX, sec. 1 23

No. 81-1945

IN THE

SUPREME COURT OF THE UNITED STATES

October Term, 1982

PACIFIC GAS AND ELECTRIC COMPANY and
SOUTHERN CALIFORNIA EDISON COMPANY,
Petitioners,

vs.

STATE ENERGY RESOURCES CONSERVATION AND
DEVELOPMENT COMMISSION, et al.,
Respondents.

ON WRIT OF CERTIORARI TO THE UNITED STATES
COURT OF APPEALS FOR THE NINTH CIRCUIT

BRIEF OF *AMICI CURIAE* STATE OF WISCONSIN, PUBLIC SERVICE COMMISSION OF WISCONSIN, STATE OF NORTH CAROLINA, STATE OF MISSOURI, COMMONWEALTH OF KENTUCKY, STATE OF NEW MEXICO, NEW MEXICO PUBLIC SERVICE COMMISSION, STATE OF IOWA AND COMMONWEALTH OF PENNSYLVANIA

This brief is submitted by the above-named *amici curiae*, pursuant to Sup. Ct. R. 42(4), in support of the respondents.

STATEMENT OF INTEREST OF THE STATE OF WISCONSIN AND PUBLIC SERVICE COMMISSION OF WISCONSIN

The generation of electric power, like other public utility enterprises, has traditionally been regulated by the states. In Wisconsin, the regulation of electricity

generation dates back to 1907. Since that time, Wisconsin has developed a comprehensive legislative and regulatory program which oversees the siting and construction of power plants, regulates the amount of electricity generated and establishes the rates charged customers and profits of the utilities. This program protects state resources, minimizes the burden on ratepayers and ensures the continued availability of electricity. These objectives have been pursued uniformly in utility regulation, regardless of the source of the electric power.

The State of Wisconsin currently has four operating nuclear reactors generating approximately thirty-three percent of the state's electric energy. While Wisconsin does not have specific statutory provisions analogous to the California statutes at issue, its Public Service Commission (WPSC), through the exercise of its statutory authority, has created an analogous circumstance. By commission order, the WPSC declared that the economic uncertainties associated with storage, disposal, reprocessing, decommissioning and uranium availability made nuclear generation less cost-effective than other sources of power, and that no nuclear power plant construction could be authorized until sufficient progress has been made toward resolving these issues. Subsequently, the state has denied applications for three proposed nuclear power plants, under its general authority to determine need, regulate siting, control costs and protect environmental quality.

The petitioners in this action argue that in enacting the Atomic Engery Act of 1954 (AEA), 42 U.S.C. §2011, *et seq.* (1970), Congress intended to foster and promote nuclear power generation, unhindered by state inquiry into the necessity for, cost of or environmental consequences associated with its generation. Acceptance of these arguments by the court would devastate the regulatory programs of the

several states, creating a regulatory vacuum and precluding any inquiry into the need for additional energy production. The states would be barred from exercising their traditional roles in overseeing energy production. Wisconsin's seventy-five year tradition of protecting its resources and citizens and ensuring cost-effective energy production would be decimated. Such a consequence, mandated by petitioners' statutory interpretation, is surely neither congressionally intended nor constitutionally permissible.

STATEMENT OF INTEREST OF THE STATE OF NORTH CAROLINA

North Carolina has a significant interest in the outcome of this appeal. In North Carolina, the siting and construction of electric power plants by public utilities and the rates charged and services provided by electric utilities are regulated by the North Carolina Utilities Commission pursuant to specific statutory authority set forth in Chapter 62 of the North Carolina General Statutes. The Commission is also required by statute to develop, publicize, and keep current an analysis of the long-range needs for expansion of facilities for the generation of electricity in North Carolina, including its estimate of the probable future growth of the use of electricity, the probable needed generating reserves, the extent, size, mix and general location of generating plants, arrangements for pooling power, and to consider such analysis in acting upon any petition by any utility for construction of any facility for the generation of electricity (N.C.G.S. 62-110.0). Chapter 62 of the North Carolina General Statutes further declares that the policy of the State shall, among other objectives, foster the continued service of public utilities on a well-planned and coordinated basis that is consistent with the level of energy needed for the protection of public health and safety and for the promotion of the general welfare

and to seek to adjust the rate of growth of regulated energy supply facilities serving the State to the policy requirements of statewide development (N.C.G.S. 62-2). Thus, a comprehensive legislating and regulatory program involving the generation of electric power has been enacted in North Carolina.

There are presently two operational nuclear powered electric generating plants, consisting of three units, located in North Carolina. (Brunswick Units 1 and 2 — Carolina Power & Light Company; McGuire Unit 1 — Duke Power Company). Another nuclear generating unit, McGuire Unit 2, is scheduled to be operational in January 1984. An additional nuclear power plant, consisting of two units, is under construction, but not expected to be operational in the near future. (Harris Unit 1 — 1986; Harris Unit 2 — 1989 — Carolina Power & Light Company). Approximately twenty-five percent of North Carolina's electric power is currently generated nuclear power plants. It is projected that by 1990, approximately forty percent of North Carolina's electric power will be generated by nuclear powered generating facilities.

It is the position of the State of North Carolina that the federal Atomic Energy Act of 1954, as amended, 42 U.S.C. §2011, *et seq.*, does not explicitly or by inference preempt state nuclear power plant regulation such as the regulatory scheme enacted by the California legislature and that important issues of federalism are involved in this case which should be resolved by an affirmation of the decision of the court of appeals.

STATEMENT OF INTEREST OF THE STATE OF MISSOURI

The State of Missouri employs traditional utility regulation of power generation facilities similar to that

described by Wisconsin in its *amicus curiae* brief. The State of Missouri believes, as does the State of Wisconsin, that its traditional regulatory authority over public utilities not dealing with radiological health matters must be available irrespective of whether the power plant at issue is a nuclear or conventional power plant. Missouri has one nuclear power plant under construction within its borders and thus it must be able to employ the type of regulatory measures set forth by the State of Wisconsin in this *amicus curiae* brief.

Missouri believes, like Wisconsin, that Congress did not intend to create a regulatory vacuum for the states in all aspects of nuclear power. To conclude that the traditional state regulatory powers are preempted for nuclear power plants could upset Missouri's regulatory program for conventional power plants. Therefore the State of Missouri joins with the State of Wisconsin in this brief in support of the traditional state regulation not dealing with radiological health matters or national security, of all public utility power plants.

STATEMENT OF INTEREST OF THE COMMONWEALTH OF KENTUCKY

If California's nuclear waste and spent fuel disposal statutes are declared unconstitutional, the ability of state utility regulatory bodies to exercise traditional controls over the nuclear power industry that is located within their respective states will be significantly undermined. With respect to states such as Kentucky, which do not have a nuclear power industry or a statutory scheme relating to the development of nuclear power, the ability to regulate a nuclear industry that may spring up in the future will be seriously impared by a finding of unconstitutionality in this case.

Utility regulation is the responsibility of the Kentucky Public Service Commission (hereinafter, Ky. PSC or Commission). Among other duties, the Ky. PSC determines whether power facilities should be constructed. Kentucky Revised Statutes (hereinafter, KRS) 278.020. When deciding this question, the Commission must insure that the proposed plant is necessary, that it will not impose an undue financial burden on ratepayers, and that it is compatible with sound land-use planning. *See,* KRS 278.016, 278.020, 278.025; and 807 Kentucky Administrative Regulations 5:001, Sec. 8.

If one accepts that the Ky. PSC can validly decide whether a conventional power plant may be constructed, it is reasonable that the Commission should have the authority to evaluate proposed nuclear plant development in light of the same factors relied on with respect to non-nuclear facilities. In both cases, it is equally important to consider question of need; of the potential financial burden ensuing from construction, safety precautions, possible shutdowns, decommissioning and dismantling; and of the impact on land use. Should the occasion arise, the Commonwealth must be in a position to make decisions regarding the feasibility of nuclear power plant construction in Kentucky.

The outcome of the case is of paramount importance to the future ability of Kentucky, through the Ky. PSC, to rely on traditional considerations of need, cost to ratepayers, and sound land use management in regulating the construction and location of nuclear power plants that may possibly be built in the state. California's challenged nuclear regulations were enacted out of the same economic and land use concerns underlying Kentucky's utility regulatory statutes. If the California Energy Commission's ability to exercise traditional regulatory

power with regard to nuclear plant construction and location is preempted, Kentucky's ability to regulate in this area will be in doubt. Such a result would constitute an unprecedented restriction on the long-established power of the Commonwealth to regulate in the field of public utilities.

STATEMENT OF INTEREST OF THE STATE OF NEW MEXICO

The interest of the State of New Mexico in filing as *amicus* in this cause is to convince the Supreme Court to uphold and affirm the Ninth Circuit Court of Appeals in its reversal of two District Court opinions which held certain statutes in the State of California to have been preempted by the Atomic Energy Act. The New Mexico Attorney General has primary responsibility under New Mexico law for rendering legal service and advice to the New Mexico Environmental Improvement Board, §14-1-8.1 NMSA 1978 and the Water Quality Control Commission, §14-1-8.2 in their general effort to preserve the state's air and water quality and to abate the causes of its degradation. In connection with rendering said legal service and assistance, the Attorney General must obtain compliance with New Mexico laws governing the transportation and disposal of radioactive materials, "without *unnecessarily* hampering the nuclear energy industry or compromising the nation's defense." [Emphasis added.] §14-4A-3. In addition, the Attorney General may intervene in ratemaking, construction authorization and other matters before the New Mexico Public Service Commission. The Attorney General's representation before the Public Service Commission insures consideration of all relevant statutes to the end that public utility electric rates ultimately charged to consumers be reasonable and that service be efficient. §§62-8-1 and 2.

The New Mexico Public Service Commission currently regulates two investor owned electric power utilities with a combined undivided interest of 990 Megawatts in the three-unit Palo Verde Nuclear Generating Station under construction near Phoenix, Arizona. In considering whether New Mexico utility participation in the construction of such a generating station is warranted the Commission must analyze costs and reliability.

Inadequate permanent nuclear waste storage disposal facilities will affect the cost of operation. Without such permanent storage facilities, significant amounts of money will have to be spent on interim storage and on searching for permanent storage. The potential for a disposal accident and enhanced clean-up costs must be considered. Inadequate waste storage may also affect the plant's long-term reliability. It is essential that the New Mexico Public Service Commission continue to have authority to take these considerations into account in making its decisions. Under the two District Court opinions in this case below, the authority would have been nullified. Such nullification would have occurred, even though the Nuclear Regulatory Commission has eliminated financial qualification of applicant electric utilities from its scope of inquiry in reactor licensing hearings. 47 Fed. Reg. 13750-13755 (March 31, 1982). In sum, the two unfavorable District Court opinions below would have left financial capacity to deal with potential nuclear waste management costs beyond the scope of any regulatory inquiry. The Ninth Circuit's decision in this case should be affirmed.

STATEMENT OF INTEREST OF THE STATE OF IOWA

The Iowa State Commerce Commission and the State of Iowa have a significant interest in questions

of federalism concerning construction of nuclear power plants, and thus in the outcome of this appeal. Iowa Code Chapter 476A (1981) requires the Iowa State Commerce Commission (Commission) to regulate the construction, operation and maintenance of all proposed electric generating facilities, including nuclear power plants.

Section 476A.2 prohibits any person from commencing to construct a facility unless a certificate of public convenience, use and necessity has been issued by the Commission. The critieria for the Commission's decision are set out in Section 476A.6:

> 476A.6 Decision — criteria. The commission shall render a decision on the application in an expeditious manner. A certificate shall be issued to the applicant if the commission finds that:
>
> 1. The services and operations resulting from the construction of the facility are required by the present or future public convenience, use and necessity; and,
>
> 2. The applicant is willing to perform such services and construct, maintain, and operate the facility pursuant to the provisions of the certificate and this chapter; and,
>
> 3. The construction, maintenance, and operation of the facility will cause minimum adverse land use, environmental, and aesthetic impact and are consonant with reasonable utilization of air, land and water resources for beneficial purposes considering available technology and the economics of available alternatives.

The Iowa State Commerce Commission and the State of Iowa have an interest in this case because of

the Commission's responsibility for rate regulation of electric utilities. One of the major benefits of Iowa's plant-siting law, Chapter 476A of the Code of Iowa, is that it allow the Commission to review major plant expenditures by electric utilities before they are actually made, and therefore to reject a facility planned by a utility if construction of that facility is not in the best interests of the utility's ratepayers. Because of the broad preemption being urged by the appellants, it is possible that the Commission's ability to protect the State's ratepayers in this manner will be hindered if applicant's arguments are accepted.

Because of the nature of the process of rate regulation, and the coverage of the Atomic Energy Act, there are certain issues which are by definition left to the states. There are the threshold questions relating to construction of a nuclear plant. The Atomic Energy Act does not address the question of whether or not demand for electricity is sufficient to justify construction of generating facilities, regardless of the type of fuel used. Nor does it attempt to determine whether, in a given instance, a nuclear facility, or one powered by some other fuel, can produce electricity most cheaply for a utility's ratepayers. It should be made clear that state determination of these questions cannot be preempted under the Atomic Energy Act because that Act does not even purport to address them. They are thus left to the states to decide. It is only after a state determines that additional generating capacity is needed, and that a nuclear power plant is the most economical means of supplying that capacity, that the question of preemption under the Atomic Energy Act arises at all. These threshold determinations are necessarily left to the states because they are not addressed within the federal framework.

Thus, the interests of the State of Iowa and the Iowa State Commerce Commission are ensuring that appellants' broad arguments relating to preemption do

not impinge upon the legitimate regulatory interests of a state in areas that were never intended to be preempted by the federal government.

STATEMENT OF INTEREST OF THE COMMONWEALTH OF PENNSYLVANIA

The interest of the Commonwealth of Pennsylvania in this case is in its ability to continue to regulate all public utilities, including those that rely on nuclear power.

SUMMARY OF ARGUMENT

State regulation which is not intended to affect radiological health and safety or the common defense is not preempted by the AEA. The AEA, by its terms, did not place nuclear power in a special status, preferred above all other state-regulated sources of power. It does not purport to insulate the nuclear industry. Rather, it governs those concerns unique to nuclear power generation, *i.e.*, radiation hazards and national security. States have historically regulated public utility rates, accounting practices, construction, long-range planning and environmental impacts of electric power plants. These areas of state regulation are fundamental to Wisconsin's long-standing regulatory scheme. Administration of the states' programs present no obstacle to compliance with the federal program, as the Nuclear Regulatory Commission (NRC) has not been delegated any of these powers by the AEA and has expressly refused to address these concerns in NRC licensing proceedings.

Regulation of electricity production is a matter traditionally reserved to state regulation. Absent any express congressional intent to abandon or alter this practice, the court should be loath to create one.

ARGUMENT

I. The Atomic Energy Act Does Not Preempt State Regulation Of Nuclear Power Generation.

A. The states' historical regulation of the addition of generating plants to utility electric systems cannot be displaced absent clear and manifest intent by Congress.

The fundamental legal proposition argued by petitioners is that Cal. Pub. Res. Code Sections 25524.1(b) and 25224.2 are preempted by the AEA. To establish this proposition, petitioners bear a heavy burden of persuasion. In evaluating the preemptive effect of a congressional act, the historic exercise of police powers of the states may not be displaced absent a clear and manifest intent by Congress. *Rice v. Santa Fe Elevator Corp.*, 331 U.S. 218, 230 (1947).

Petitioners urge the court to ignore this standard on the theory that regulation of nuclear power generation is a federal monopoly. This premise is simply erroneous. It ignores the fundamental fact that, although electricity generation through nuclear fission is relatively new, the activities of the electric power industry have been historically regulated by the states. In Wisconsin, for example, the state has regulated decisions relating to electricity production for seventy-five years, covering a plethora of issues relating to need, cost and accounting.

Wisconsin's regulatory scheme is illustrative of the regulatory programs in the several states. Under sec. 196.49, Wis. Stats., adopted in 1931, the PSC must certify a public need for the electricity production. Section 196.491(2), Wis. Stats., requires the PSC to consider economic, environmental and other factors in

reviewing public utilities' ten-year advance plans. Additionally, any new major facilities must conform to approved advance plans. Sec. 196.491(3), Wis. Stats. Wisconsin's regulatory program reflects the need to coordinate total energy production, both nuclear and non-nuclear, to establish long-range planning, and to ensure adequate and reliable electricity production to serve the needs of its citizens.

Wisconsin has also traditionally regulated the rates charged by public utilities. Under sec. 196.03, Wis. Stats., originally passed in 1907, the WPSC has general ratemaking authority. *See also* secs. 196.20 and 196.37, Wis. Stats. Under sec. 196.09, Wis. Stats., the WPSC has the power to set depreciation rates. The WPSC regulates utility securities issues under ch. 184, Wis. Stats. Likewise, ch. 196, Wis. Stats., authorizes the WPSC to exercise supervisory control over utilities' cost accounting, mergers, acquisitions and reorganization. Hence, Wisconsin, in order to insure cost-effective energy supply and to protect ratepayers, regulates virtually all aspects of electricity production which have an economic impact.

Additionally, Wisconsin has traditionally regulated land-use and other environmental aspects of power plant construction. Section 32.07, Wis. Stats., confers the power of eminent domain on utilities for generating plants which are certified by the WPSC. The Wisconsin Environmental Policy Act, sec. 1.11, Wis Stats., and sections NR 150.03(1) and PSC 2.90(1)(a) Wis. Adm. Code, require the preparation of an environmental impact statement prior to siting a power plant larger than twenty Megawatt capacity.

While this list of state statutes regulating public utilities is not exhaustive, it does demonstrate the scope of power company activities historically regulated by the state. This oversight is premised on the need to ensure adequate energy supply and to

protect ratepayers from monopolistic business behavior. Exclusion of nuclear power facilities from this regulatory scheme would intolerably interfere with these functions, making long-range planning and cost-control virtually impossible.

The authority and duty of states to regulate electricity production has long been recognized by the Supreme Court. *See, e.g., Central Hudson Gas & Electric Corp. v. Public Service Comm.*, 447 U.S. 557, 571 (1980); *Jackson v. Metropolitan Edison Co.*, 419 U.S. 345, 357 (1974). This authority is premised on the recognition of the unique monopoly status of electric utilities, and the need to assure adequate service and fair rates. Absent any express congressional mandate placing nuclear power generation in a preferred position, insulated from the requirements to be cost-effective and necessary, logic and the *Rice* case mandate that state regulation of nuclear power generation must be permitted as an integral component of a comprehensive program.

B. Congress did not intend to preempt state regulation of the nuclear industry.

The Atomic Energy Act was passed in 1954 to allow the use of special nuclear materials by persons other than the United States Government. Before the passage of the AEA, private possession or use of nuclear materials was illegal. The AEA establishes a system of licensing and a body with continuing supervisory powers to ensure that private persons using these materials do not jeopardize the public health or safety or the country's security. Unlicensed use or possession continues to be illegal.

The fundamental issue in this case is whether, by enactment of the AEA, Congress intended to preempt state regulation of the public utilities which use

nuclear energy. This issue has been effectively addressed in depth in a number of briefs before this court, most noticeably the brief of *amicus* State of New York. This brief will not duplicate those efforts. However, several points do deserve further emphasis.

1. There is nothing in the AEA which expressly preempts state regulation. Section 274, 42 U.S.C. §2021 (1970), establishes the basis for federal-state cooperation in the regulation of atomic energy, and to "clarify the respective responsibilities" of the states and the NRC. Section 274 (a) (2) expressly states the congressional intent to establish cooperative programs "with respect to control of *radiation hazards*" (emphasis added). Recognizing the limited scope of the AEA, sections 274(b) and (c) permit the NRC to transfer, within limits, its regulatory responsibilities to the states.

That the purpose of this subsection is limited to the regulation of radiological health and safety is borne out by other provisions. Under section 274(d), the NRC may enter into a cooperative agreement only if the state has a compatible program "for the control of radiation hazards." Section 274(g) authorizes the NRC to cooperate with the states to formulate "standards for protection against hazards of radiation." Section 274(k) expressly and unequivocally provides: "Nothing in this section shall be construed to affect the authority of any State or local agency to regulate activities *for purposes other than protection against radiation hazards*" (emphasis added). Finally, the court of appeals properly relied upon section 271, 42 U.S.C. §2018, which has previously been construed to preserve traditional state control over nuclear energy production to the same extent as other means of energy production. *Maun v. United States*, 347 F.2d 970, 975-76 (9th Cir. 1965); *Public Service Company of New Hampshire v. U.S. NRC*, 582 F.2d 77, 84-85 (1st Cir. 1978), *cert. denied*, 439 U.S. 1046.

2. The courts have interpreted the AEA as not preempting all state regulations. In *Vermont Yankee Nuclear Corp. v. NRDC*, 435 U.S. 519, 550 (1978), this court said:

> There is little doubt that under the Atomic Energy Act of 1954, state public utility commissions or similar bodies are empowered to make the initial decision regarding the need for power.

In response to a contention that a license granted by the Atomic Energy Commission would harm the Connecticut River, the First Circuit held:

> The Commission's response, that the provisional construction permit merely authorizes construction of a facility, that it does not authorize the use of water from the Connecticut River, and the applicant is not relieved from any obligation to comply with applicable state and federal laws, seems a sufficient one.

State of New Hampshire v. Atomic Energy Commission, 406 F. 2d 170, 176 (1st Cir. 1969), *cert. denied*, 395 U.S. 962.

The most succinct expression of the relationship between state and federal regulatory spheres comes from the Supreme Court of Missouri:

> The federal government regulates *how* nuclear plants will be constructed and maintained; the State of Missouri regulates *whether* they will be constructed.

State ex rel. Utility Consumers Council of Missouri v. Public Service Commission, 562 S.W.2d 688, 698 (Mo. 1978), *cert. denied*, 439 U.S. 866.

3. Petitioners find support for their interpretation in the legislative history, from which they urge that

the AEA was intended to "foster and encourage" nuclear development. However, petitioners misread the pertinent provisions, 42 U.S.C. §2011-2013. These statements of declaration and purpose reflect a policy that atomic energy should be put to peaceful, as well as military use, and to encourage public participation in the development and use of atomic energy. However, as the court of appeals wisely held, this goal does not mean Congress intended to "promote nuclear power at all costs." *Pacific Legal Foundation v. State Energy Resource, etc.*, 659 F.2d 903, 920 (9th Cir. 1981). These sections do not require development of nuclear power. The policy statements *assume* development of nuclear power, they do not *mandate* it.

4. There is no necessary conflict between the federal and state regulatory programs. While the AEA assumes the development of nuclear power and encourages a rational, peaceful use of it, the AEA in no way mandates nuclear development. Rather, it provides a procedure for granting a license for using special nuclear materials. A license is "[a] permission, by a competent authority to do some act which without such authorization would be illegal." *Black's Law Dictionary* 1067 (4th ed. 1968). The granting of such a license has never been held to compel the licensee to build the facility. The Michigan Court of Appeals has specifically addressed this issue, stating:

> [T]he license granted by the AEC is merely a permit to construct a power plant, not a Federal order to do so. Therefore, a state which, pursuant to its Atomic Energy Act power to regulate non-radioactive hazards, stopped a power company from operating until it met reasonable state standards or abated a nuisance under state law could not be frustrating a Federal mandate.

Marshall v. Consumers Power Co., 237 N.W.2d 266, 280, 82 ALR3d 729, 746 (Mich. App. 1975).

This principle has also been recognized, in another context, by this court. In *Huron Portland Cement v. City of Detroit*, 362 U.S. 440 (1960), the court held that a federal license granted to a ship for the safety of the boiler did not immunize the licensee against a local air pollution ordinance which required further pollution control equipment. The two regulations were held not to conflict. The court stated, 362 U.S. at 447: " The mere possession of a federal license, however, does not immunize a ship from the operation of the normal incidents of local police power...."

Amici herein concede that a direct interference with the actual design of a nuclear facility which affected its radiological safety would be, except as to air emissions, prohibited to the state under the AEA. Congress was clearly concerned that concurrent and perhaps conflicting design standards would lead to unsafe conditions. But to leap from that fact to a holding that any activity which impinges on nuclear power conflicts with the powers granted to the Nuclear Regulatory Commission is error.

State regulations, like section 25524.2, which are concerned with provision of reliable electric service at reasonable cost, do not conflict with radiological health and safety rules, since they do not attempt to set any radiological health and safety standards. No applicant is put in the position where one rule compels what the other forbids, so that compliance with both federal and state regulation is impossible.

C. The Atomic Energy Commission and Nuclear Regulatory Commission have interpreted the Atomic Energy Act as being concerned only with radiological health and safety and the common defense.

The Atomic Energy Commission, in carrying out its mandate, has defined the scope of its own authority to include only radiological health and safety and national defense. The Atomic Safety and Licensing Board has refused to claim jurisdiction over recreational, economic or aesthetic effects of granting a license. *In the Matter of Vermont Yankee,* Docket No. 50-271, December 8, 1967, 4 AEC Reporter, pp. 48-50. The Commission, affirming the Board, said:

> Stated in other terms, the Commission's regulatory authority in the health and safety area is limited under the Act to matters of radiological health and safety.
>
> We think it additionally worth noting that this consistent interpretation of the scope of our regulatory authority, in the form of both regulations and adjudications, has been brought to the attention of the Congress, including the Joint Committee on Atomic Energy.

4 AEC Reporter 75 at 78-79.

Similarly, the Atomic Safety and Licensing Board noted in the license for Wisconsin's Point Beach Unit 1:

> An eloquent plea was voiced and reiterated in limited appearance statements, that "All available evidence and facts should be obtained to assure the public that atomic

> energy plants will not contribute to the further deterioration of Lake Michigan." The merit of such appeals cannot enlarge the Board's jurisdiction which *is restricted to a consideration of the possible radiological effects of the proposed facility.*

In the Matter of Wisconsin Michigan Power Company, Docket No. 50-166, 4 AEC Reporter 3, 6, n. 3 (1969) (emphasis supplied).

This narrow view of the Commission's authority is shared by the First Circuit:

> In short, we conclude that, in enacting the Atomic Energy Acts of 1946 and 1954, in overseeing its administration, and in considering amendments, the Congress has viewed the responsibilities of the Commission as being confined to scrutiny of and protection against hazards from radiation.

State of New Hampshire v. Atomic Energy Commission, supra, 406 F.2d at 175.

It is also the view shared by the Supreme Court:

> The commission's prime area of concern in the licensing context, on the other hand, is national security, public health, and safety.

Vermont Yankee Nuclear Corp. v. NRDC, supra, 435 U.S. at 550.

The NRC, in deciding that it is consistent with the public health and safety to construct and operate a nuclear power plant, does not consider in depth whether it can be done economically; nor could it deny a license because the project would be uneconomical or an unreasonable burden on ratepayers. If the NRC finds that a proposal does not threaten the public health or safety or the common defense, it must grant

a license. 42 U.S.C. §2133; *Westinghouse Electric Corporation v. NRC*, 598 F.2d 759, 772 (3rd Cir. 1979).

II. State Regulation Of Electricity Generation, Including Electricity From Nuclear Sources, Is An Integral Element Of Its Traditional Regulation Of Public Utilities.

A. States have properly exercised their traditional regulatory powers to disallow electric generation development which was unneeded, environmentally unacceptable, or uneconomical, using standards which have been applied uniformly to nuclear and non-nuclear proposals.

Like California, other states have conditioned the approval of new nuclear power plants upon a demonstration that the uncertainties associated with nuclear waste disposal are resolved. Wisconsin, for instance, is currently operating under such a "nuclear moratorium." Wisconsin's status stems not from a statute, however, but from a WPSC order. On August 17, 1978, the WPSC issued an order in Docket No. 05-EP-1, *Advance Plans for Construction of Facilities as Filed with the Commission for Review and Approval Pursuant to Section 196.491, Wis. Stats.* In this review of ten-year plans, the WPSC reflected upon the costs associated with nuclear power generation. The WPSC order stated, at 15:

> The Commission determined that nuclear generation is likely to be more costly than coal (in terms of total fixed, fuel and operating costs) when considering present uncertainties

> in fuel, decommissioning, and waste disposal costs.

In its findings of fact, the WPSC stated, at 27:

> 5. That the present uncertainties in the nuclear fuel cycle regarding waste storage and disposal, uranium availability, reprocessing, and decommissioning costs make it contrary to the public interest for Wisconsin utilities to commit themselves at this time to a large program of future nuclear expansion. No new applications for nuclear generating plants, other than Tyrone I and Haven I, will be accepted until such uncertainties are resolved to the satisfaction of the commission.

Its order, reflecting this finding, states, at 31:

> 5. No nuclear generation shall be planned or applied for with the exception of Haven Unit I and Tyrone Unit I until reasonable progress — satisfactory to the commission — has been made in resolving waste disposal, fuel supply, and decommissioning issues. Any utility which desires in the future to incorporate in its advance plan nuclear plants beyond the two mentioned above shall submit to the commission a situation which demonstrates such progress. After appropriate investigation, the commission will rule on the petition based on its view of the then-current situation.

This order well illustrates the appropriate role of state agencies, consistent and compatible with the AEA. The order, while precluding new nuclear plants until certain cost factors are clarified, does not invade the province of the NRC. The objective of the WPSC

order is to provide reliable, inexpensive energy to its citizens. The advance plan is a comprehensive planning document, which addresses electric needs and costs of alternative sources of energy, including coal and solar. The uncertainties to which the order refers relate to fuel availability, plant reliability and future costs, matters which would not be considered by the NRC pursuant to the AEA. Absent such a state regulatory program, these issues, critical to the public served by the plants, would never be addressed.

In a similar vein, the state has refused to approve the proposed Tyrone, Koshkonong and Haven nuclear plants. In the Tyrone case, the WPSC determined, pursuant to sec. 196.49, Wis. Stats. (enacted in 1931), that the proposed plant was both unneeded and more costly to ratepayers than coal-fired plants. In the Koshkonong case, the Wisconsin Department of Natural Resources rejected the site because, if built, the plant would have consumptively used all the water in the river flowing out of the shallow lake upon which the site was situated, thereby adversely affecting water quality. The application was rejected pursuant to ch. 147, Wis. Stats., the Wisconsin equivalent of the National Water Pollutant Discharge Elimination System (NPDES) permit program, and Wisconsin Constitution art. IX, sec. 1, which imposes an obligation upon the state to protect public waters under a public trust doctrine. Again, were it not for these state regulatory functions, these issues would go completely unaddressed.

Other traditional state regulatory powers could similarly stay the unabated development of nuclear power, while not conflicting with the AEA. When the Koshkonong proposal was resited as the Haven proposal, the WPSC persuaded the utility to drop, rather than defer, the project when the need for power declined, based upon its regulation of utility

accounting methods. This WPSC order, in Docket No. 05-CE-3, issued pursuant to secs. 196.05 and 196.06, Wis. Stats., allowed a return on the unamortized balance only if the proposals were dropped but not deferred. Pursuant to its ratemaking powers, a state commission could similarly refuse to place the costs of a nuclear plant in the rate base or grant it construction work in progress treatment. Such a decision could well impel a utility to abandon a nuclear project. Likewise, a state's refusal to grant its powers of eminent domain to a utility could result in the cancellation of a plant. These ratemaking and eminent domain powers among powers historically recognized as within the state's authority.

While petitioners profess to acknowledge some state role in the regulation of nuclear power, they fail to delineate exactly what that power is. If the states cannot exercise their most basic regulatory functions, such as those identified above, one must wonder what role, if any, petitioners view as envisioned within section 274(k).

B. Preemption of state regulation of the non-radiological aspects of atomic energy generation would imperil the states' ability to regulate other sources of electricity and would create a regulatory vacuum.

The Atomic Energy Act, as interpreted by the petitioners, would displace the state's role as decision-maker in areas where the state has traditionally regulated integral governmental functions. The states have traditionally exercised exclusive jurisdiction over thermal electric power plant siting, land use planning and development patterns, aesthetics, resource

development, zoning, business development, rate-making, and the decision as to the need for additional electric power. The states have also traditionally been the major regulators of environmental quality, a task which is now shared, to a limited degree, with the Federal Government.

The state regulatory schemes establish comprehensive programs which address critical questions applicable to all power plants, and which do not conflict with NRC's consideration of radiation issues unique to nuclear power generation. If petitioners' positions prevail, all of these controls could effectively be bypassed by any utility which opted for a nuclear proposal. Once it was shown that its design would not threaten the public health and safety through exposure to radiation or the common defense, the applicant would have a mandatory right to a license from the Nuclear Regulatory Commission. *See, e.g., Westinghouse v. NRC, supra,* 598 F.2d at 772. The state would have to grant a site, allow the use of its waters, grant the use of its power of eminent domain, and force the ratepayer to pay for the plant, because to do otherwise would "frustrate Congress' intent."

The logical and probable result of such a decision would, realistically, leave the states with no ability to function effectively in many of the traditional areas of land use, resource conservation and public utility regulation. The state, having granted a monopoly to the utility, would be barred from exercising any control over it.

Nor could the state exercise its role of determining electricity needs and controlling its supply, both nuclear and non-nuclear. Utilities could construct unlimited power plants, regardless of their need, and pass on all costs to ratepayers. Such preemption would remove all checks on utility decision-making. And,

inevitably, it is the user, the ratepayer, the common citizen, who would pay the price.

CONCLUSION

States have historically been responsible for the regulation of electric generating utilities. These comprehensive regulatory programs, developed over the better part of this century, touch upon numerous public concerns and serve to ensure reliable, adequate and cost-effective energy production. The states' responsibility to provide such protection has been judicially recognized.

By enactment of the Atomic Energy Act, Congress sought to federally regulate those aspects of electricity production unique to nuclear power — radiological safety and national security. By its terms, the Act preserves traditional state regulatory functions. Nothing in the Act, either expressly or by necessary implication, preempts the states' exercise of these traditional functions.

The California statutes, like the laws in other states, regulate nuclear power generation to the same degree as other means of electricity production, based on legitimate state interests. There is no inherent conflict in this dual system of regulation, as the states do not purport to address issues relating to radiation hazards. Rather, they regulate those areas which the NRC has expressly declined to address.

For the reasons stated in this brief, the *amici curiae* herein urge this court to affirm the decision of the court of appeals.

Respectfully submitted,

BRONSON C. LA FOLLETTE
Attorney General
STATE OF WISCONSIN
Post Office Box 7857
Madison, Wisconsin 53707
(608)266-1221

STEVEN M. SCHUR
Chief Counsel
PUBLIC SERVICE COMMISSION
OF WISCONSIN
463 Hill Farms State Office Building
4802 Sheboygan Avenue
Madison, Wisconsin 53702
(608)266-1264

RUFUS L. EDMISTEN
Attorney General
STATE OF NORTH CAROLINA
Post Office Box 629
Raleigh, North Carolina 27602
(919)733-3377

JOHN ASHCROFT
Attorney General
STATE OF MISSOURI
Post Office Box 899
Jefferson City, Missouri 65102
(314)751-3321

STEVEN L. BESHEAR
Attorney General
COMMONWEALTH OF KENTUCKY
Room 116, Capitol Building
Frankfurt, Kentucky 40601
(502)564-2200

RICHARD H. LEVIN
Assistant Attorney General
STATE OF NEW MEXICO
Post Office Drawer 1508
Santa Fe, New Mexico 87503
(505)982-6000

GEOFFREY W. SLOAN
Staff Attorney
NEW MEXICO PUBLIC SERVICE COMMISSION
Bataan Memorial Building
Santa Fe, New Mexico 87503
(505)827-3361

THOMAS J. MILLER
Attorney General
STATE OF IOWA
Hoover State Office Building
Des Moines, Iowa 50319
(515)281-8373

JAMES R. MARET
Commerce Counsel
IOWA STATE COMMERCE COMMISSION
Lucas State Office Building
Des Moines, Iowa 50319
(515)281-5984

LEROY S. ZIMMERMAN
Attorney General
COMMONWEALTH OF PENNSYLVANIA
505 Executive House
Post Office Box 2357
Harrisburg, Pennsylvania 17120
(717)787-3391

OF COUNSEL:

CARL A. SINDERBRAND
Assistant Attorney General
STATE OF WISCONSIN
Post Office Box 7857
Madison, Wisconsin 53707
(608)266-3936

BARBARA E. JAMES
Assistant Chief Counsel
PUBLIC SERVICE COMMISSION OF WISCONSIN
463 Hill Farms State Office Building
4802 Sheboygan Avenue
Madison, Wisconsin 53702
(608)266-1264

Amicus Brief for the United States

Office - Supreme Court, U.S.
FILED
SEP 3 1982
ALEXANDER L. STEVAS,
CLERK

No. 81-1945

In the Supreme Court of the United States

OCTOBER TERM, 1982

PACIFIC GAS AND ELECTRIC COMPANY, ET AL.,
PETITIONERS

v.

STATE ENERGY RESOURCES CONSERVATION &
DEVELOPMENT COMMISSION, ET AL.

ON WRIT OF CERTIORARI TO THE UNITED STATES COURT OF APPEALS FOR THE NINTH CIRCUIT

BRIEF FOR THE UNITED STATES AS AMICUS CURIAE SUPPORTING REVERSAL

REX E. LEE
Solicitor General

J. PAUL MCGRATH
Assistant Attorney General

LOUIS F. CLAIBORNE
Deputy Solicitor General

JOHN H. GARVEY
Assistant to the Solicitor General

LEONARD SCHAITMAN
AL J. DANIEL, JR.
Attorneys

Department of Justice
Washington, D.C. 20530
(202) 633-2217

QUESTIONS PRESENTED

1. Whether the provisions in the 1976 amendments to California's Warren-Alquist Act, Cal. Pub. Res. Code §§ 25524.1(b) and 25524.2 (West 1977), which condition the construction of nuclear power plants on findings by the State Energy Resources Conservation and Development Commission that there are adequate storage facilities and means of disposal available for high-level nuclear waste, are ripe for review.

2. Whether §§ 25524.1(b) and 25524.2 are preempted by the Atomic Energy Act.

TABLE OF CONTENTS

	Page
Interest of the United States	1
Summary of argument	2
Argument:	
I. Petitioners' challenge to Cal. Pub. Res. Code §§ 25524.1(b) and 25524.2 is ripe for review	4
II. The explicit terms and pervasive scope of the Atomic Energy Act preempt California's effort to forbid construction of nuclear power plants pending its approval of storage and disposal methods	9
A. The Atomic Energy Act preempts all state authority over the special characteristics of nuclear energy	9
B. California's Nuclear Laws are not saved by Sections 271 and 274 of the Atomic Energy Act	21
1. Section 271 does not authorize a state to condition power plant construction on a utility's plan for storage and disposal of spent fuel	22
2. Section 274 does not authorize a state to directly regulate preempted activities for economic motives	26
III. California's ban on the construction of nuclear power plants frustrates the Atomic Energy Act's purpose to develop the commercial use of nuclear power	30
A. A primary purpose of the Atomic Energy Act is to promote the commercial use of nuclear power	31
B. California's Nuclear Laws frustrate this purpose of the Atomic Energy Act	34

Argument—Continued Page

1. The development of nuclear power is an issue of national concern which cannot be foreclosed by local decisions 35

2. Even if concurrent state regulation were permitted, it would have to be narrowly drawn and nondiscriminatory 38

Conclusion 40

TABLE OF AUTHORITIES

Cases:

Arizona v. *California*, 373 U.S. 546 36
Arlington Heights v. *Metropolitan Housing Corp.*, 429 U.S. 252 6
Campbell v. *Hussey*, 368 U.S. 297 38
Carter v. *Carter Coal Co.*, 298 U.S. 238 8
Castle v. *Hayes Freight Lines, Inc.*, 348 U.S. 61 38
Chicago v. *Atchison, T. & S.F. Ry.*, 357 U.S. 77 38
Chicago & North Western Transportation Co. v. *Kalo Brick & Tile Co.*, 450 U.S. 311 ..... 12, 27
City of Burbank v. *Lockheed Air Terminal, Inc.*, 411 U.S. 624 ..... 12, 33, 36
City of Tacoma v. *Taxpayers*, 357 U.S. 320 36
Colorado Public Interest Research Group v. *Train*, 507 F.2d 743, rev'd, 426 U.S. 1 30
Commonwealth Edison Co. v. *Montana*, 453 U.S. 609 34
DeCanas v. *Bica*, 424 U.S. 351 27
Duke Power Co. v. *Carolina Environmental Study Group, Inc.*, 438 U.S. 59 ..... 1, 6, 7, 32, 33-34
Edgar v. *Mite Corp.*, No. 80-1188 (June 23, 1982) .. 36-37
Exxon Corp. v. *Governor of Maryland*, 437 U.S. 117 34
Fidelity Federal Savings & Loan Association v. *de la Cuesta*, No. 81-750 (June 28, 1982) 21, 34
First Iowa Hydro-Electric Cooperative v. *FPC*, 328 U.S. 152 ..... 35, 36
Florida Lime & Avocado Growers, Inc. v. *Paul*, 373 U.S. 132 27
Goldstein v. *California*, 412 U.S. 546 7

Cases—Continued Page

Hines v. *Davidowitz*, 312 U.S. 52 ..... 4, 38
Huron Cement Co. v. *Detroit*, 362 U.S. 440 .....27, 34, 37
Illinois v. *General Electric Co.*, No. 81-2768 (7th Cir. July 13, 1982) 12, 33
Jones v. *Rath Packing Co.*, 430 U.S. 519 38
Merrill Lynch, Pierce, Fenner & Smith v. *Ware*, 414 U.S. 117 27
Minnesota v. *NRC*, 602 F.2d 412 20
NRDC v. *NRC*, No. 74-1586 (D.C. Cir. Apr. 27, 1982) 17, 20
NRDC v. *NRC*, 582 F.2d 166 ..... 19, 21
Northern States Power Co. v. *Minnesota*, 447 F.2d 1143, aff'd mem., 405 U.S. 1035 .....16, 23, 34
Pacific Gas & Electric Co. v. *State Energy Resources Conservation and Development Commission*, 489 F. Supp. 699 29
Pacific Legal Foundation v. *State Energy Resources Conservation and Development Commission*, 472 F. Supp. 191 29
Pacific Lighting Gas Supply Co., In re, 59 Cal. P.U.C. 444, 43 Pub. Util. Rep. 3d (PUR) 486..... 24
Pennsylvania v. *West Virginia*, 262 U.S. 553 7
Perez v. *Campbell*, 402 U.S. 637 27
Potomac Alliance v. *NRC*, No. 80-1862 (July 20, 1982) 20
Power Reactor Development Co. v. *Electricians*, 367 U.S. 396 .....16, 17, 21
Public Utilities Commission of California v. *United States*, 355 U.S. 534 ..... 2, 8
Railroad Transfer Service v. *Chicago*, 386 U.S. 351 8
Ray v. *Atlantic Richfield Co.*, 435 U.S. 151 .....3, 12, 27, 38
Regional Rail Reorganization Act Cases, 419 U.S. 102 6
Rice v. *Santa Fe Elevator Corp.*, 331 U.S. 218..... 16
San Diego Building Trades Council v. *Garmon*, 359 U.S. 236 27
Southern California Edison, In re, 60 Cal. P.U.C. 410 24
Toll v. *Moreno*, No. 80-2178 (June 28, 1982) 38

Cases—Continued Page

Train v. *Colorado Public Interest Research Group, Inc.*, 426 U.S. 1 ..... 16, 34
Vermont Yankee Nuclear Power Corp. v. *NRDC*, 435 U.S. 519 ..... 17, 22, 34, 36
Warth v. *Seldin*, 422 U.S. 490 6
Washington State Building & Construction Trades Council v. *Spellman*, No. 81-3453 (9th Cir. Aug. 17, 1982) 12, 37

Statutes and regulations:

Atomic Energy Act of 1946, ch. 724, 60 Stat. 755 .. 9
Atomic Energy Act of 1954, ch. 1073, 68 Stat. 919, 42 U.S.C. (& Supp. IV) 2011 *et seq.* 1, 2, 9, 33
42 U.S.C. 2011(a) 31
42 U.S.C. 2012(a) 31
42 U.S.C. 2012(g) 31
42 U.S.C. 2012(i) 32
42 U.S.C. 2013(a) 31
42 U.S.C. 2013(b) 31
42 U.S.C. 2014(aa) 10
42 U.S.C. (Supp. IV) 2014(e) 10
42 U.S.C. 2014(z) 10
Section 271, 42 U.S.C. 2018 ..... 2, 3, 10, 11, 22, 23, 24, 25, 26, 35
Section 272, 42 U.S.C. 2019 36
Section 274, 42 U.S.C. (& Supp. IV) 2021 .. 13, 26
Section 274(a)(1), 42 U.S.C. 2021(a)(1) .. 12
Section 274(a)(2), 42 U.S.C. 2021(a)(2) .. 12
Section 274(b), 42 U.S.C. (Supp. IV) 2021(b) 3, 12-13
Section 274(c), 42 U.S.C. (& Supp. IV) 2021(c) 3, 13
Section 274(c)(1), 42 U.S.C. 2021(c)(1) .. 1, 13, 16, 17, 24
Section 274(c)(4), 42 U.S.C. 2021(c)(4) .. 1, 13, 14, 16, 17
Section 274(g), 42 U.S.C. 2021(g) 13
Section 274(k), 42 U.S.C. 2021(k) 3, 14, 15, 16, 26, 27, 28, 35
Section 274(*l*), 42 U.S.C. 2021(*l*) 3, 14, 15
42 U.S.C. 2051(a)(4) 31

Statutes and regulations—Continued

	Page
42 U.S.C. 2061	10
42 U.S.C. 2072, repealed, Pub. L. No. 88-489, Section 4, 78 Stat. 603	10
42 U.S.C. 2073	1
42 U.S.C. 2073(a)	10
42 U.S.C. 2093	10
42 U.S.C. (Supp. IV) 2111	1, 10
42 U.S.C. (& Supp. IV) 2131 *et seq.*	10
42 U.S.C. (& Supp. IV) 2133	1
42 U.S.C. (& Supp. IV) 2201	1
42 U.S.C. 2201(b)	10
42 U.S.C. 2201(i)(3)	10
42 U.S.C. 2232(c)	10
42 U.S.C. (& Supp. IV) 2271-2282	10
Authorization Act for Fiscal Year 1980, Pub. L. No. 96-295, 94 Stat. 780	33
Clean Air Act Amendments of 1977, 42 U.S.C. (Supp. IV) 7422	33
Energy Reorganization Act of 1974, 42 U.S.C. (& Supp. IV) 5801 *et seq.*	32
42 U.S.C. 5814(a)	32
42 U.S.C. (& Supp. IV) 5841	9
42 U.S.C. 5843	32
42 U.S.C. 5844	32
42 U.S.C. 5847	32
42 U.S.C. (Supp. IV) 5850	32
Federal Aviation Act, 49 U.S.C. 1303(a)	33
Federal Nonnuclear Energy Research and Development Act of 1974, 42 U.S.C. 5901 *et seq.*	33
42 U.S.C. 5902(b)(2)	33
Federal Power Act, 16 U.S.C. 791a *et seq.*	35
National Environmental Policy Act of 1969, 42 U.S.C. 4321 *et seq.*	17
Powerplant and Industrial Fuel Use Act of 1978, 42 U.S.C. (Supp. IV) 8301 *et seq.*	32
42 U.S.C. (Supp. IV) 8301(b)(3)	32
42 U.S.C. (Supp. IV) 8302(a)(6)(A)	32
42 U.S.C. (Supp. IV) 8311	32
42 U.S.C. (Supp. IV) 8312(a)	32
42 U.S.C. (Supp. IV) 8401	32

Statutes and regulations—Continued Page

Price-Anderson Act, 42 U.S.C. 2210 ..... 4, 29, 32
Pub. L. No. 94-197, Sections 2-14, 89 Stat. 1111-1115 32
42 U.S.C. (Supp. IV) 7133(a)(8)(C) 18
Alaska Stat. § 18.45.025 (Cum. Supp. 1981) 37
Cal. Health and Safety Code §§ 25875-25876 (West 1977) 13
Cal. Pub. Util. Code § 1001 (West Supp. 1982) 24
Conn. Gen. Stat. Ann. § 22a-136 (West Cum. Supp. 1982) 37
Hawaii Const. art. XI, § 8 (Hawaii Rev. Stat. (Supp. 1981)) 37
1982 Me. Acts ch. 643 37
Me. Rev. Stat. Ann. tit. 10 §§ 251-256 (1980) 37
Md. Ann. Code art. 78, § 54A (Supp. 1981) 37
Mass. H. Res. No. 5888 (1979) 37
Mont. Code Ann. (1981):
§ 75-20-201 37
§§ 75-20-1201 to 75-20-1205 37
Or. Rev. Stat. § 469.595 (1981) 37
R. I. Gen. Laws § 42-64-14.1 (1977) 37
Vt. Stat. Ann. tit. 30, § 248(c) (Cum. Supp. 1982) .. 37
Warren-Alquist State Energy Resources Conservation and Development Act, Cal. Pub. Res. Code §§ 25000 *et seq.* (West 1977 & Cum. Supp. 1982) 4
§§ 25502-25516 6
§§ 25517-25530 6
§ 25524.1 5
§ 25524.1(a) 8
§ 25524.1(b) ..... *passim*
§ 25524.2 ..... *passim*
§ 25524.2(a) 5
§ 25524.2(b) 5, 7, 12
§ 25524.2(c) 5, 39
§ 25524.3(b) (Cum. Supp. 1982) 29
Wash. Rev. Code Ann. § 80.50.100 (Cum. Supp. 1982) 37
10 C.F.R. Parts 0-170 17

Statutes and regulations—Continued Page

10 C.F.R. Part 2 25
Section 2.802 25
Section 2.805 25
10 C.F.R. Part 8:
Section 8.4(c) 17, 28
Section 8.4(i) 17, 28
10 C.F.R. Part 50:
Section 50.34(b) (2) (i) 17
Section 50.34(b) (2) (ii) 17
App. A 17
App. F 15
10 C.F.R. 51.20(e) 17
10 C.F.R. Part 60 18
Sections 60.61-60-63 ..... 18, 25
10 C.F.R. Part 72 18
Section 72.34 25
10 C.F.R. 150.15(a) (1) (i) 17

Miscellaneous:

Assembly Committee on Resources, Land Use, and Energy, *Analysis of the Resources, Land Use and Energy Committee's Nuclear Energy Legislative Package, AB's 2820, 2821, 2822, 2823* (Mar. 8, 1976) 23, 29, 30, 39
Assembly Committee on Resources, Land Use, and Energy, *Reassessment of Nuclear Energy in California, A Policy Analysis of Proposition 15 and Its Alternatives* (May 10, 1976) 23, 24, 29, 30
100 Cong. Rec. (1954):
p. 12015 11
p. 12019-12020 10
p. 12200 11
p. 12201 36
105 Cong. Rec. 8384 (1959) 13, 16, 17
119 Cong. Rec. 21189-21199 (1973) 34
Department of Energy, Letter from DOE to the Administrative Law Judge, *In the Matter of Proposed Rulemaking on the Storage and Disposal of Nuclear Waste*, PR-50, 51 (Mar. 27, 1981) 19

Miscellaneous—Continued Page

Department of Energy, Prehearing Statement, *In the Matter of Proposed Rulemaking on the Storage and Disposal of Nuclear Waste*, PR-50, 51 (Dec. 21, 1981) 18
Department of Energy, DOE/SR-0006, *Report On Fee For Spent Nuclear Fuel Storage and Disposal Services* (Oct. 1980) 24
Department of Energy, DOE/RL-82-1, *Spent Fuel Storage Requirements* (June 1982) 19
Department of Energy, DOE/NE-0007, Statement of Position, *In the Matter of Proposed Rulemaking on the Storage and Disposal of Nuclear Waste*, PR-50, 51 (Apr. 15, 1980) 18, 19, 24
9 Envir. Rep. (BNA) 707 37
44 Fed. Reg. 61372 (1979) 20
45 Fed. Reg. 31393 (1980) 18
The Federalist (B. Wright ed. 1961) 7
Federal-State Relationships In The Atomic Energy Field: Hearings Before the Joint Comm. on Atomic Energy, 86th Cong., 1st Sess. (1959) 14, 15, 28, 33, 35
H.R. 4971, 94th Cong., 1st Sess. (1975) 21
H.R. 11880, 94th Cong., 1st Sess. (1976) 21
H.R. 881, 95th Cong., 1st Sess. (1977) 21
H.R. 882, 95th Cong., 1st Sess. (1977) 21
H.R. 336, 96th Cong., 1st Sess. (1979) 21
H.R. 3581, 96th Cong., 1st Sess. (1979) 21
H.R. 3698, 96th Cong., 1st Sess. (1979) 21
H.R. 3832, 96th Cong., 1st Sess. (1979) 21
H.R. 751, 97th Cong., 1st Sess. (1981) 21
H.R. 2800, 97th Cong., 1st Sess. (1981) 21
H.R. Rep. No. 2181, 83d Cong., 2d Sess. (1954) .. 11, 31, 32
H.R. Rep. No. 1125, 86th Cong., 1st Sess. (1959) 14
H.R. Rep. No. 883, 89th Cong., 1st Sess. (1965) 32
H.R. Rep. No. 93-707, 93d Cong., 1st Sess. (1973) .. 33
H.R. Rep. No. 93-1445, 93d Cong., 2d Sess. (1974) .. 33
Industrial Radioactive Waste Disposal: Hearings Before The Special Subcomm. on Radiation of the Joint Comm. on Atomic Energy, 86th Cong., 1st Sess. (1959) 15

Miscellaneous—Continued Page

International Nuclear Fuel Cycle Evaluation, *Waste Management and Disposal, Report of Working Group 7* (Jan. 1980) 24
Jaksetic, *Constitutional Dimensions of State Efforts to Regulate Nuclear Waste*, 32 S.C. L. Rev. 789 (1981) 37
Murphy & LaPierre, *Nuclear "Moratorium" Legislation in the States and the Supremacy Clause: A Case of Express Preemption*, 76 Colum. L. Rev. 392 (1976) 16, 33, 36
Nuclear Regulatory Commission, NUREG-0575, *Final Generic Environmental Impact Statement on Handling and Storage of Spent Light Water Power Reactor Fuel* (1979) 18
Nuclear Regulatory Commission, *Information Report on State Legislation* 37
61 Op. Cal. Att'y Gen. 159 (1978) 30
Palfrey, *Energy and the Environment: The Special Case of Nuclear Power*, 74 Colum. L. Rev. 1375 (1974) 33
S. 1217, 93d Cong., 1st Sess. (1973) 21
S. 1178, 96th Cong., 1st Sess. (1979) 21
S. Rep. No. 1699, 83d Cong., 2d Sess. (1954) 11, 31, 32
S. Rep. No. 870, 86th Cong., 1st Sess. (1959) 3, 12, 13, 14, 23, 26, 28
S. Rep. No. 296, 85th Cong., 1st Sess. (1957) 32
S. Rep. No. 93-980, 93d Cong., 2d Sess. (1974) 32
S. 3323 and H.R. 8862, To Amend the Atomic Energy Act of 1954: Hearings Before the Joint Comm. on Atomic Energy, 83d Cong., 2d Sess. (1954) 11
Stensvaag, *State Regulation of Nuclear Generating Plants Under the Clean Air Act Amendments of 1977*, 55 S. Cal. L. Rev. 511 (1982) 34
17 Weekly Comp. of Pres. Doc. 1102 (Oct. 8, 1981) 8, 34

In the Supreme Court of the United States

OCTOBER TERM, 1982

No. 81-1945

PACIFIC GAS AND ELECTRIC COMPANY, ET AL., PETITIONERS

v.

STATE ENERGY RESOURCES CONSERVATION & DEVELOPMENT COMMISSION, ET AL.

ON WRIT OF CERTIORARI TO THE UNITED STATES COURT OF APPEALS FOR THE NINTH CIRCUIT

BRIEF FOR THE UNITED STATES AS AMICUS CURIAE SUPPORTING REVERSAL

INTEREST OF THE UNITED STATES

This case presents a substantial question concerning the preemptive effect of the Atomic Energy Act, 42 U.S.C. (& Supp. IV) 2011 *et seq.*, on state laws regulating the storage and disposal of nuclear waste and the construction and operation of nuclear power plants. The Act gives the Nuclear Regulatory Commission (NRC) the exclusive authority to regulate such activities (see 42 U.S.C. (& Supp. IV) 2021(c)(1), (4), 2073, 2133, 2201; 42 U.S.C. (Supp. IV) 2111; *Duke Power Co.* v. *Carolina Environmental Study Group, Inc.*, 438 U.S. 59, 63 & n.1 (1978)). Conflicting state restrictions compromise the Commission's statutory responsibilities. The Atomic Energy Act also expresses the objective, implemented by the Department of Energy (DOE), "to encourage widespread participation in the development and utilization of atomic energy for peaceful purposes * * *." 42 U.S.C. 2013(d). When a state forbids the construction of nuclear power

plants, while permitting the construction of other types of power plants, it frustrates this express congressional policy.

SUMMARY OF ARGUMENT

I.

California's Nuclear Laws, Cal. Pub. Res. Code §§ 25524.1(b) and 25524.2 (West 1977), are ripe for review. Insofar as ripeness is a constitutional question—about the existence of a "Case or Controversy"—it is satisfied by the finding of both courts below that petitioners are injured by the Nuclear Laws, and that their injury would be redressed by the relief requested.

The prudential considerations embodied in ripeness also argue for a prompt resolution of petitioners' claims. Both courts below found § 25524.2 to be ripe. The outright ban on construction of new nuclear plants presents a purely legal question of preemption, which is not susceptible of any further factual development. Moreover, the meaning of § 25524.2 is clear, and the harm to petitioners is immediate. Finally, delaying decision will both injure consumers of electrical power and frustrate one of the purposes of the Atomic Energy Act—to promote the commercial development of atomic energy. The same considerations suggest that § 25524.1(b) is likewise ripe for review. This Court need not wait for the Energy Commission to exercise unconstitutional power. *Public Utilities Commission of California* v. *United States*, 355 U.S. 534, 539 (1958).

II.

A. The Atomic Energy Act of 1954, 42 U.S.C. (& Supp. IV) 2011 *et seq.*, gave the NRC (formerly the Atomic Energy Commission) exclusive authority to regulate nuclear facilities and materials insofar as they present unique health and safety hazards and national security problems. It permitted states to regulate aspects of nuclear power which were similar to conventional power sources—such matters as rates and services. 42 U.S.C. 2018. By forbidding the construction of nuclear facilities

until it is satisfied with the prospects for storage and disposal of high-level radioactive waste, California has ignored that division of authority. *Ray* v. *Atlantic Richfield Co.*, 435 U.S. 151, 174 (1978).

The 1959 amendment to the Act gave the states an advisory role concerning matters within the NRC's jurisdiction. It also declared that the new authority which it conferred on the states did not affect their preexisting authority. But it left intact NRC's authority over the construction and operation of power plants, and over the disposal of nuclear waste which presented serious health or safety hazards. 42 U.S.C. (& Supp. IV) 2021(b), (c) and (*l*).

The NRC has concluded that, given the availability of present safe storage methods and progress toward a method of permanent disposal, it may continue to license new power reactors. Congressional committees charged with oversight of the area have reviewed the issue, and NRC's response, almost annually.

B. Respondents have asserted that the Nuclear Laws are authorized by 42 U.S.C. 2018 and 2021(k). They contend that if means of storage and disposal are not available, the spent fuel generated by reactors will present radiation hazards which will force nuclear plants to shut down, and that that in turn will impose economic costs on the state's ratepayers. The state's asserted concern, however, rests on a judgment about the risk of radiation hazards which the Act reserves to the NRC. Congress made clear its belief that such issues present "technical safety considerations * * * of such complexity that it is not likely that any State would be prepared to deal with them during the foreseeable future." S. Rep. No. 870, 86th Cong., 1st Sess. 3 (1959). It also found, as to questions about radiation hazards, that "interstate, national, or international considerations may be paramount * * *." *Ibid.* It consequently gave the NRC exclusive authority to make such judgments.

III.

A. The terms of the Atomic Energy Act and its legislative history demonstrate an explicit congressional pur-

pose to promote the development and utilization of atomic energy. An identical purpose underlies the Price-Anderson Act. Congress has shown no signs of weakening that resolve.

B. California's Nuclear Laws "stand[] as an obstacle to the accomplishment and execution of the full purposes and objectives of Congress." *Hines* v. *Davidowitz*, 312 U.S. 52, 67 (1941). Nuclear energy was seen, by those who enacted the Atomic Energy Act, as a federal resource much like the nation's water power resources. Thus the decision to encourage progress in its development is one which must be made at the federal level.

Even if California were to be permitted to protect its economic concerns at the expense of goals favored by the federal government, it could not do so by the means it has chosen. If the real concern underlying § 25524.2 is the economic cost to California ratepayers which might be caused by a shutdown, that concern is already completely satisfied by § 25524.1(b), which requires that storage facilities be available throughout the useful life of the plant. And § 25524.1(b) itself imposes a burden on nuclear power facilities which has no parallel in the state's legislation concerning oil and coal-fired plants—power sources which the state has found are no less expensive than nuclear energy, and subject to similar uncertainties.

ARGUMENT

I. PETITIONERS' CHALLENGE TO CAL. PUB. RES. CODE §§ 25524.1(b) AND 25524.2 IS RIPE FOR REVIEW

In 1976 California amended the Warren-Alquist State Energy Resources Conservation and Development Act, Cal. Pub. Res. Code § 25000 *et seq.* (West 1977 & Cum. Supp. 1982), by adopting several provisions (the Nuclear Laws) which prohibit the construction of new nuclear power plants until the State Energy Resources Conservation and Development Commission (Energy Commission) has made certain findings. Section 25524.1(b) provides

that the Energy Commission shall not issue a certificate for construction of a nuclear plant unless it has found

> that facilities with adequate capacity * * * to store [spent] fuel * * * are in actual operation or will be in operation at the time such nuclear facility requires such * * * storage; provided, however, that such storage of fuel is in an offsite location to the extent necessary to provide continuous onsite full core reserve storage capacity.

Section 25524.2(a) prohibits the issuance of a certificate for construction until the Energy Commission finds that the NRC "has approved and there exists a demonstrated technology or means for the disposal of high-level nuclear waste." By "disposal" is meant "permanent and terminal disposition." *Id.* § 25524.2(c).[1]

After a trial limited to the issue of standing the district court found as a fact that Pacific Gas and Electric Company (PG&E) had concluded that §§ 25524.1 and 25524.2, coupled with the Energy Commission's failure to make the required findings, made further financial investment in its Stanislaus nuclear plant "an unreasonable risk" (Pet. App. 74). The court also found that if those sections and other challenged provisions (see *id.* at 68) were held invalid, PG&E would reactivate the Stanislaus project (*id.* at 74). The court made similar findings regarding Southern California Edison Company's (SCE) proposal for a nuclear plant, and held that the utilities' claims were ripe for adjudication (*id.* at 75-78). The court of appeals affirmed the district court's factual findings (*id* at 17-18) and upheld its decision regarding the ripeness of § 25524.2 (Pet. App. 25-26). It concluded, however, that a challenge to § 25524.1(b) was not ripe "[b]ecause we cannot know whether the Energy Commission will ever find a nuclear plant's storage capacity to be inadequate * * *" (Pet. App. 25).

---

[1] Energy Commission findings under § 25524.2 are subject to disaffirmance by the California legislature, which may also halt construction even though the Commission is willing to issue a certificate. Section 25524.2(b).

1. The issue of ripeness is, in part, an aspect of the Article III "Case or Controversy" limitation on federal jurisdiction. *Duke Power Co.* v. *Carolina Environmental Study Group, Inc., supra*, 438 U.S. at 81; *Regional Rail Reorganization Act Cases*, 419 U.S. 102, 138 (1974). The Article III requirement is met by the finding of both courts below that petitioners "will sustain immediate injury from the operation of the disputed [provisions] and that such injury would be redressed by the relief requested * * *." *Duke Power Co., supra*, 438 U.S. at 81.

2. As was true in *Duke Power Co.*, "[t]he prudential considerations embodied in the ripeness doctrine also argue strongly for a prompt resolution of the claims presented." 438 U.S. at 81. The court of appeals correctly held that the moratorium provision (§ 25524.2) presented a purely legal issue. No further factual development is possible, since the statute on its face prohibits certification of new nuclear power plants until certain findings have been made, and it is undisputed that the Energy Commission has not made the required findings. Nor is this a case where the meaning of the state law would be clarified by further state action; the prohibition is unambiguous (Pet. App. 27 n.24). Finally, this is not a case where the harm alleged is not yet sufficiently definite. Cf. *Warth* v. *Seldin*, 422 U.S. 490, 516-517 (1975). Although, as the court of appeals noted (Pet. App. 26), utilities may continue to submit papers preliminary to certification, see Cal. Pub. Res. Code §§ 25502-25516 ("notice of intention" procedure), 25517-25530 (West 1977) ("certification" procedure), that very process requires an investment of years of effort and "massive expenditures" of funds (Pet. App. 26). PG&E, for example, had spent at least $10,000,000 before even filing a notice of intention to file an application for certification (*id.* at 72). Cf. *Arlington Heights* v. *Metropolitan Housing Corp.*, 429 U.S. 252, 262 (1977). It simply ignores financial realities to say that utilities may—like Sisyphus—proceed up to the final step, when they have concluded that the moratorium on certification

makes that arduous undertaking a waste of effort and money.[2]

Nor should the hardship from delayed review be examined solely from the utilities' perspective. Extension of electrical services requires considerable advance planning (see Pet. App. 71 (12 to 14 years from initiation to operation of nuclear plants)), and temporizing about the availability of nuclear power will ultimately work harm to ratepayers in California. *Pennsylvania* v. *West Virginia*, 262 U.S. 553, 592-595 (1923). Finally, because the consequence of the statute is to prohibit the construction of nuclear power plants, "delayed resolution would frustrate one of the key purposes of the [Atomic Energy] Act"—promotion of the commercial development and use of atomic energy. *Duke Power Co.*, *supra*, 438 U.S. at 82; see pages 31-34, *infra*.[3]

3. There is little reason to distinguish, as the court of appeals did, between the ripeness of § 25524.2 and that of § 25524.1(b). The latter provision unconditionally regulates the location of storage facilities ("storage * * * [must be] in an offsite location to the extent necessary

---

[2] For the same reasons, the provision in § 25524.2(b) permitting legislative disaffirmance of Energy Commission findings about disposal is ripe for review. The court of appeals stated that "[i]n applying preemption analysis, we 'distinguish those situations in which the concurrent exercise of a power by the Federal Government and the States or by the States alone *may possibly* lead to conflicts and those situations where conflicts *will necessarily* arise.'" (Pet. App. 40 n.35, quoting *Goldstein* v. *California*, 412 U.S. 546, 554 (1973) (emphasis in original)). To say that a state law is not preempted because it presents no necessary conflict is, of course, not to say that the issue of preemption is unripe. In this case the claim is that the authority California has given its legislature in fact does conflict with the exclusive authority given by the Atomic Energy Act to the NRC, and is "contradictory and repugnant" to the purposes of the Act. *Goldstein* v. *California*, *supra*, 412 U.S. at 553, quoting *The Federalist* No. 32, at 241 (B. Wright ed. 1961) (emphasis omitted).

[3] This inhibiting effect is increased exponentially as other states follow the lead of California in adopting moratorium statutes. See page 37 notes 34-35, *infra*.

to provide continuous onsite full core reserve storage capacity"), and forbids construction of any plant until the Energy Commission concludes to its satisfaction that storage facilities are or will be available throughout the useful life of the plant.[4] Because of the nature of the constitutional issue, there is no reason to await the actual denial of a certificate by the Energy Commission. *Public Utilities Commission of California* v. *United States*, 355 U.S. 534, 539 (1958). See also *Railroad Transfer Service* v. *Chicago*, 386 U.S. 351, 357-358 (1967); *Carter* v. *Carter Coal Co.*, 298 U.S. 238, 287-288 (1936). The question is not whether the Energy Commission will exercise its judgment in a satisfactory way, but whether it has constitutional authority to condition nuclear plant construction on its approval of their storage arrangements.

Not only is the legal issue clear, but the harm is both substantial and immediate. The district court found as a fact that this provision, together with § 25524.2, "create[s] an unreasonable risk that [the Energy Commission] would not grant certification to Stanislaus on a timely basis or at all" (Pet. App. 74), and "makes it impracticable to commence such a project [as SCE planned] in California" (*id.* at 76). Given the unquestionable deterrent effect which the statute has, the question is not one which will mature with the passage

---

[4] Section 25524.1(b) makes the availability of reprocessing facilities an alternative to its storage requirements, though at the time this case was decided in the court of appeals reprocessing was not an option (Pet. App. 24 & n.23). On October 8, 1981 President Reagan "lift[ed] the indefinite ban * * * on commercial reprocessing activities in the United States." 17 Weekly Comp. of Pres. Doc. 1102 (Oct. 8, 1981). It is contemplated that "the private sector [will] take the lead in developing commercial reprocessing services." *Ibid.* Such services are not, however, currently an NRC-approved alternative to storage of spent fuel. Consequently, the government has not addressed the constitutionality of Cal. Pub. Res. Code § 25524.1(a) (West 1977) (imposing a moratorium on nuclear plants requiring reprocessing), and of § 25524.1(b) insofar as it deals with reprocessing facilities.

of time. A holding that § 25524.1(b) is not ripe for review will terminate petitioners' plans for construction of nuclear power plants.

II. THE EXPLICIT TERMS AND PERVASIVE SCOPE OF THE ATOMIC ENERGY ACT PREEMPT CALIFORNIA'S EFFORT TO FORBID CONSTRUCTION OF NUCLEAR POWER PLANTS PENDING ITS APPROVAL OF STORAGE AND DISPOSAL METHODS

The Atomic Energy Act grants to the NRC in explicit terms and great detail the exclusive authority to regulate the construction and operation of nuclear power plants and the storage and disposal of spent fuel. The NRC has exercised that authority by enacting still more detailed regulations. In §§ 25524.1(b) and 25524.2 California has attempted to forbid the construction of nuclear power plants pending its approval of facilities for storage and techniques for disposal of spent fuel. Those provisions are clearly preempted by federal law.

A. The Atomic Energy Act Preempts All State Authority Over The Special Characteristics Of Nuclear Energy

1. The Atomic Energy Act of 1954, ch. 1073, 68 Stat. 919, ended the absolute government monopoly over atomic energy established by the Atomic Energy Act of 1946, ch. 724, 60 Stat. 755, and provided for private participation in the commercial development of nuclear power subject to strict federal control. Its most significant provisions gave to the Atomic Energy Commission[5] absolute authority to regulate nuclear plant construction and waste disposal. The Commission was authorized to make rules "govern[ing] the possession and use of special nuclear material, source material, and byproduct mate-

[5] The Atomic Energy Commission's regulatory functions were transferred to the Nuclear Regulatory Commission by the Energy Reorganization Act of 1974, 42 U.S.C. (& Supp. IV) 5841. For the sake of simplicity, further discussion will use "NRC" to refer to both Commissions.

rial,"[6] 42 U.S.C. 2201(b),[7] and "governing the design, location, and operation of [power plants] * * * in order to protect health and to minimize danger to life or property * * *." 42 U.S.C. 2201(i)(3).

Nuclear power plants cannot be built or operated without an NRC license. 42 U.S.C. (& Supp. IV) 2131 *et seq.* See 100 Cong. Rec. 12019-12020 (1954) (remarks of Sen. Humphrey). A license is also required for possession of special, source, and byproduct nuclear material. 42 U.S.C. 2073(a), 2093; 42 U.S.C. (Supp. IV) 2111.[8] Violations of the Act and regulations are subject to strict criminal and civil sanctions. 42 U.S.C. (& Supp. IV) 2271-2282.

The field marked out by the 1954 Act for the states was one where all consideration of the special character of nuclear energy was unnecessary. The NRC is required, before issuing a license, to give written notice "to such regulatory agency as may have jurisdiction over the rates and services incident to the proposed activity * * *." 42 U.S.C. 2232(c). And Section 271 (42 U.S.C. 2018) provides that:

> Nothing in this chapter shall be construed to affect the authority or regulations of any Federal, State, or local agency with respect to the generation, sale, or transmission of electric power produced through

---

[6] The term "special nuclear material" is defined in 42 U.S.C. 2014(aa) to include plutonium, enriched uranium 233 and 235, and similar material capable of sustaining a chain reaction. "Source material" includes uranium, thorium, and similar materials and their ores. 42 U.S.C. 2014(z). "Byproduct material," 42 U.S.C. (Supp. IV) 2014(e), includes radioactive material "yielded in or made radioactive by * * * utilizing special nuclear material * * *."

[7] Citations in text are to provisions currently effective, which may differ in insignificant respects from those enacted in 1954.

[8] The United States is the exclusive owner of all facilities for the production of special nuclear material—the essential fuel for reactors—except for specified research facilities and those licensed by the NRC. 42 U.S.C. 2061. Until 1964 the United States actually owned all special nuclear material. 42 U.S.C. 2072, repealed, Pub. L. No. 88-489, Section 4, 78 Stat. 603.

> the use of nuclear facilities licensed by the Commission * * *.

Both provisions obviously assume the existence of an NRC-licensed plant, and address the electricity itself produced by the plant. 100 Cong. Rec. 12015 (1954) (remarks of Senator Hickenlooper); *id.* at 12200. See also *S. 3323 and H.R. 8862, To Amend the Atomic Energy Act of 1954: Hearings before the Joint Comm. on Atomic Energy*, 83d Cong., 2d Sess. 596 (1954) (remarks of Lewis L. Strauss, AEC Chairman).[9]

The 1954 Act does not explicitly address the storage and disposal of spent fuel or other high-level waste. Nor does it explicitly forbid state regulation of such activities. But the absence of an explicit prohibition is not surprising, since the regulatory system already in place under the 1946 Act was a federal monopoly, out of which the 1954 Act carved only a limited authority for the states. None of the activities which California has sought to regulate—construction and operation of power plants, storage (§ 25524.1(b)) and disposal (§ 25524.2) of high-level waste—can be carried on without a license from the NRC, which monitors licensees' activities in painstaking detail. Insofar as those activities present health and safety hazards or affect national security because of the unique characteristics of nuclear power, the Act makes it clear that NRC's authority is exclusive. The states' role is confined to regulating aspects of nuclear power similar to conventional power sources—*e.g.*, rates and services. Banning the construction of new

---

[9] The House and Senate reports simply describe Section 271 as "preserv[ing] the regulatory power of any appropriate agency with respect to the generation, sale, or transmission of electric power" without further illumination. S. Rep. No. 1699, 83d Cong., 2d Sess. 31 (1954); H.R. Rep. No. 2181, 83d Cong., 2d Sess. 31 (1954). There was surely no thought that the authority "preserved" by Section 271 would extend beyond such questions as "rates and services" since the states had no prior role regarding nuclear power to be preserved. Until passage of the 1954 Act there had been "a Government monopoly" over "the manufacture and use of atomic materials * * *." S. Rep. No. 1699, *supra*, at 3. See 100 Cong. Rec. 12015 (1954) (remarks of Senator Humphrey).

nuclear power plants until California's Energy Commission and legislature are satisfied with the prospects for storage and disposal ignores that division of authority. It is thus preempted by the 1954 Act. *Ray* v. *Atlantic Richfield Co., supra,* 435 U.S. at 174 ("§ 1222(b), by permitting the State to impose higher equipment or safety standards 'for structures only,' impliedly forbids higher state standards for vessels"); *Chicago & North Western Transportation Co.* v. *Kalo Brick & Tile Co.*, 450 U.S. 311 (1981); *City of Burbank* v. *Lockheed Air Terminal, Inc.*, 411 U.S. 624, 633-640 (1973); *Washington State Building & Construction Trades Council* v. *Spellman*, No. 81-3453 (9th Cir. Aug. 17, 1982), slip op. 4-5; *Illinois* v. *General Electric Co.*, No. 81-2768 (7th Cir. July 13, 1982), slip op. 16.[10]

2. In 1959 Congress amended the Atomic Energy Act in order to grant the states some role in protecting the public health and safety from radiation hazards presented by byproduct, source, and special nuclear materials. 42 U.S.C. 2021(a)(1), (2); see S. Rep. No. 870, 86th Cong., 1st Sess. 8, 10 (1959). The principal substantive provision of the amendment, Section 274(b), 42 U.S.C.

---

[10] It does not excuse the California regulatory scheme to say that the standards it imposes are to be defined by the federal government. In the first place, § 25524.1(b) does not incorporate any federal standard, but leaves it entirely within the discretion of the Energy Commission to decide whether storage facilities "will be in operation at the time such nuclear facility requires such * * * storage * * *." Moreover, § 25524.2 requires the Energy Commission to find not only that the NRC has approved a disposal technology, but also that "a demonstrated technology" "exists." The Energy Commission's Nuclear Fuel Cycle Committee has stated that those demands cannot be met unless the technology is demonstrated by "*in situ* large scale tests," and the NRC has licensed the operation of "a commercial high-level waste depository" (Pet. App. 70). Section 25524.2(b) then permits the California legislature to disaffirm the findings of the Energy Commission. More importantly, however, the conflict in this case is not about whether a demonstrated disposal technology exists and has been approved, but about whether new nuclear plants may be built before the technology is approved. On that issue the state Energy Commission and the NRC are in direct conflict.

(Supp. IV) 2021(b), authorizes the NRC, by agreements with state governors, to discontinue its regulatory authority over byproduct and source material, and over special nuclear material "in quantities not sufficient to form a critical mass." State programs permitted under the amendment must, however, be "coordinated and compatible" with that of the NRC. Section 2021(g); S. Rep. No. 870, *supra*, at 11.[11]

The principal limitation on the subject matter of such agreements is contained in Section 274(c), 42 U.S.C. (& Supp. IV) 2021(c):

> [T]he Commission shall retain authority and responsibility with respect to regulation of—
>
> (1) the construction and operation of any production or utilization facility;
>
> * * * * *
>
> (4) the disposal of such * * * byproduct, source, or special nuclear material as the Commission determines * * * should, because of the hazards or potential hazards thereof, not be so disposed of without a license from the Commission.

The Commission's analysis of its proposal—ultimately enacted as Section 274(c)—gave examples of the kinds of activity reserved to the Commission. With respect to Section 274(c)(1) it said (105 Cong. Rec. 8384 (1959)):

> Such activities include, but are not limited to, the possession and storage at the site of the licensed activity of nuclear fuel and of source, special nuclear material and byproduct materials used or produced in the operation of the facility; the transportation of nuclear fuels to and from the reactor site; and the discharge of effluent from the facility.
>
> * * * * *
>
> [T]he Commission will retain control over the disposal by licensed operators of * * * reactors * * * of radioactive wastes produced [at such facilities].

[11] California has signed a Section 274 agreement. Cal. Health & Safety Code §§ 25875-25876 (West 1977).

Regarding Section 274(c)(4) the Commission stated that it would (*ibid.*)

> reserve for the continued exercise of its regulatory controls, the disposal by burial of significant quantities or types of such materials.

See also *Federal-State Relationships in the Atomic Energy Field: Hearings Before the Joint Comm. on Atomic Energy*, 86th Cong., 1st Sess. 306 (1959) (*"Federal-State Hearings"*); S. Rep. No. 870, *supra*, at 4, 10.[12] The House and Senate reports make clear that this authority reserved to the Commission was to be exclusive. *Id.* at 8, 9; H.R. Rep. No. 1125, 86th Cong., 1st Sess. 8, 9 (1959).

In addition to the provision for "turn-over" agreements the 1959 amendment recognized state authority in two other ways. Section 274(k) (42 U.S.C. 2021(k)) simply stated that the amendment was not intended to cut back on preexisting state authority *outside* the NRC's jurisdiction:

> Nothing in this section shall be construed to affect the authority of any State or local agency to regulate activities for purposes other than protection against radiation hazards.

And Section 274(*l*) (42 U.S.C. 2021(*l*)) created an advisory role respecting activities exclusively *within* the NRC's jurisdiction:

> With respect to each application for Commission license * * *, the Commission shall give prompt notice to the State or States in which the activity will be conducted * * * and shall afford reasonable opportunity for State representatives to offer evidence, interrogate witnesses and advise the Commission as to the application * * *.

---

[12] The reasons for reserving these particular areas for exclusive NRC regulation were several. To some extent they were thought to be activities "as to which interstate, national, or international considerations may be paramount * * *." In addition, "the technical safety considerations are of such complexity that it is not likely that any State would be prepared to deal with them during the foreseeable future." H.R. Rep. No. 1125, 86th Cong., 1st Sess. 3 (1959).

There was, of course, no suggestion that the authority preserved by Section 274(k) extended in any way to disposal of spent fuel. Congress was aware that both then and "[f]or the foreseeable future, all high-level waste resulting from processing of spent fuel elements from licensed reactors [was to] be returned to the Commission for processing and handling." *Industrial Radioactive Waste Disposal: Hearings Before the Special Subcomm. on Radiation of the Joint Comm. on Atomic Energy*, 86th Cong., 1st Sess. 2513 (1959) (remarks of H. L. Price, Director of Licensing and Regulation, AEC); *Federal-State Hearings*, *supra*, at 25-27 (John S. Graham, AEC Commissioner), 42-61 (J.A. Lieberman, Chief, Environmental and Sanitary Engineering Branch, Division of Reactor Development, AEC). See also 10 C.F.R. Part 50 App. F, No. 3.[13] Thus, there simply was no preexisting state authority regarding disposal of spent fuel to be preserved by Section 274(k); that was a matter within the exclusive jurisdiction of the NRC.

Although the NRC's authority was discussed in terms of protecting the public against radiation hazards, neither Section 274(k) nor the other provisions in the amendment conferred on the states the authority to afford the public *greater* protection than the NRC found warranted. The statute preempted the entire field of protection against radiation hazards, not just state laws which would plainly frustrate the NRC's efforts to protect health and safety. The states were encouraged to express their concerns through the advisory process established in Section 274(*l*), but that was the limit of their power. *Federal-State Hearings*, *supra*, at 492-493.[14]

---

[13] 10 C.F.R. Part 50 App. F, No. 1 now provides that "facilities for the temporary storage of high-level radioactive wastes[] may be located on privately owned property."

[14] It was recognized that state laws of general applicability, enacted for reasons other than disagreement with the NRC about the chance of harm from reactor operations, might be valid even though they had an incidental effect on licensed activities. *Federal-State Hearings*, *supra*, at 500.

Thus the 1959 amendment to the Act, far from supplementing the states' authority to regulate the storage and disposal of high-level waste, makes clearer than before that those activities were the exclusive province of the federal government. At least insofar as reactor construction was contingent upon the special character of nuclear facilities, licensing control was retained exclusively by the NRC. 42 U.S.C. 2021(c)(1). Cf. *Power Reactor Development Co.* v. *Electricians*, 367 U.S. 396, 404 (1961); *Train* v. *Colorado Public Interest Research Group, Inc.*, 426 U.S. 1, 5-6, 15-16 (1976); *Northern States Power Co.* v. *Minnesota*, 447 F.2d 1143 (8th Cir. 1971), aff'd mem., 405 U.S. 1035 (1972). The NRC also was to "retain control over the disposal by licensed operators of * * * reactors * * * of radioactive wastes produced [at such facilities]." 105 Cong. Rec. 8384 (1959); 42 U.S.C. 2021(c)(4). The states were given no power "to regulate activities for purposes [of] protection against radiation hazards." 42 U.S.C. 2021(k).

Section 25524.2, which conditions construction on developments in disposal technology, thus conflicts with the express terms of the 1959 amendment. *Rice* v. *Santa Fe Elevator Corp.*, 331 U.S. 218, 232-236 (1947); Murphy & LaPierre, *Nuclear "Moratorium" Legislation in the States and the Supremacy Clause: A Case of Express Preemption*, 76 Colum. L. Rev. 392, 446-447 (1976). Section 25524.1(b) is equally clearly forbidden by the express terms of the amendment. Its last clause requires that storage of spent fuel be "in an offsite location to the extent necessary to provide continuous onsite full core reserve storage capacity." [15] But 42 U.S.C. 2021(c)(1) reserves to the NRC the responsibility for regulating the "operation of any * * * utilization facility"; and operation includes "storage at the site of the licensed activity of nuclear fuel and of source, special

[15] A "full-core reserve" is the capacity needed to permit storage of the entire reactor core, which may sometimes be removed to permit certain repairs of the reactor.

nuclear material and byproduct materials used or produced in the operation of the facility * * *." 105 Cong. Rec. 8384 (1959). Section 25524.1(b) also permits the Energy Commission to condition the construction of new plants on its assessment of the availability of storage space for spent fuel. Like § 25524.2, that provision simply ignores the exclusive authority vested in the NRC by 42 U.S.C. 2021(c)(1) and (4).

3.a. The NRC, implementing its obligations under the Atomic Energy Act, has promulgated regulations too detailed to summarize. 10 C.F.R. Parts 0-170.[16] The NRC has concluded that "[t]he Atomic Energy Act of 1954 had the effect of preempting to the Federal Government the field of regulation of nuclear facilities and byproduct, source, and special nuclear material." 10 C.F.R. 8.4(c), (i). To get an NRC operating license one must submit a satisfactory safety analysis report, with particular attention to "radioactive waste handling systems." 10 C.F.R. 50.34(b)(2)(i), (ii). See also 10 C.F.R. 150.15(a)(1)(i). The regulations specify general design criteria and control requirements for fuel storage and handling and radioactive waste to be stored at the reactor site. 10 C.F.R. Part 50 App. A, Criteria 60-64, at 412.[17]

---

[16] For an overview of the procedure involved in reactor license applications see *Vermont Yankee Nuclear Power Corp.* v. *NRDC*, 435 U.S. 519, 525-527 (1978); *Power Reactor Development Co.* v. *Electricians, supra*, 367 U.S. at 404-409.

[17] Integrated with the construction permit and licensing process is the review required by the National Environmental Policy Act of 1969 (NEPA), 42 U.S.C. 4321 *et seq.* For NEPA purposes NRC has concluded, after extensive review, that high-level waste can most probably be disposed of safely. 10 C.F.R. 51.20(e). The District of Columbia Circuit recently reviewed that generic rule in *NRDC* v. *NRC*, No. 74-1586 (Apr. 27, 1982), slip op. 61-69. The court did not dispute NRC's assessment of the likelihood of safe disposal. It nevertheless concluded that the generic rule conflicted with NEPA because the *possibility* that waste might not be securely disposed of in a federal repository was not factored in as a cost in individual licensing proceedings. *Id.* at 42-52.

In addition to regulating the storage of spent fuel and radioactive waste at the reactor site, the NRC has promulgated detailed regulations governing storage and disposal away from the reactor. 10 C.F.R. Part 72. NRC has also promulgated procedural requirements covering license applications for disposal of high-level radioactive waste in geologic repositories. 10 C.F.R. Part 60. A draft of technical criteria against which license applications will be reviewed was published for public comment on May 13, 1980. 45 Fed. Reg. 31393. The procedural specifications make explicit provision for state consultation and participation in NRC's review of any site proposed by DOE. 10 C.F.R. 60.61-60.63.

b. The Department of Energy, which is given by statute the responsibility for "the establishment of temporary and permanent facilities for storage, management, and ultimate disposal of nuclear wastes," 42 U.S.C. (Supp. IV) 7133(a)(8)(C), concluded in 1980 that it would be able to select a site for repository license application by 1987. Statement of Position of the United States Department of Energy, DOE/NE-0007, *In the Matter of Proposed Rulemaking on the Storage and Disposal of Nuclear Waste*, PR-50, 51, at III-85 (Apr. 15, 1980) (DOE/NE-0007). Given the period thereafter required for regulatory review, construction, and testing, DOE has found that a repository can be in operation between 1999 and 2006, if not sooner, depending upon the exact rock type in which the repository is constructed. Cf. *id.* at III-86; Prehearing Statement of the United States Department of Energy, *In the Matter of Proposed Rulemaking on the Storage and Disposal of Nuclear Waste*, PR-50, 51 (Dec. 21, 1981).[18]

Pending the licensing of permanent disposal facilities there are approved methods for storage of spent fuel

[18] That estimate for a repository operation date compares favorably with the estimated operation date for commercial reactors which utilities might decide today to build. It takes approximately 12 to 14 years from the time a decision is made to build such a plant until it begins operation (Pet. App. 71).

and related waste produced from commercial reactor operations. At present nearly all spent fuel is stored at the reactor site in pools of water, a technique used since the first reactors were built nearly 40 years ago by the federal government, and found safe and effective by both NRC and DOE. See Nuclear Regulatory Commission, NUREG-0575, *Final Generic Environmental Impact Statement on Handling and Storage of Spent Light Water Power Reactor Fuel* (1979); DOE/NE-0007, *supra*, at IV-19 to IV-74. Given current utility plans for reactor operation and enlargement of on-site storage capability, DOE projects that a small amount of additional storage capacity will be needed by 1984, and a total of 1420 metric tons required by 1990. Department of Energy, DOE/RL-82-1, *Spent Fuel Storage Requirements* (June 1982). If utilities are permitted to store spent fuel at other reactor sites within their own systems, additional storage capacity would not be needed until 1986; approximately 400 metric tons of additional capacity would be needed by 1990. *Ibid.* Water pool storage facilities away from reactors can currently be designed, built, and licensed in seven or eight years. DOE/NE-0007, *supra*, at V-21.[19]

In 1977 NRC was asked by respondent Natural Resources Defense Council to halt reactor licensing until it had determined that there was a method of permanent disposal for high-level waste. NRC concluded that, given the progress towards development of disposal facilities and the fact that interim storage was "available and highly likely to remain so," it could, consistently with the Act, continue to license new reactors. *NRDC* v. *NRC*, 582 F.2d 166, 168-169 (2nd Cir. 1978). NRC's conclusion

---

[19] Additional options, if approved by NRC, would include dry storage at reactor sites, see DOE/NE-0007, *supra*, at IV-12 to IV-19, IV-63, and disassembly of spent fuel rods for storage in canisters. The latter technology has the potential for doubling the storage capacity of some existing reactor basins. Letter from DOE to the Administrative Law Judge, *In the Matter of Proposed Rulemaking on the Storage and Disposal of Nuclear Waste*, PR-50, 51 (Mar. 27, 1981).

was upheld by the Second Circuit as consistent with the Atomic Energy Act. *Ibid.* Shortly thereafter, in *Minnesota* v. *NRC*, 602 F.2d 412 (D.C. Cir. 1979), the District of Columbia Circuit declined to disturb NRC's decision to permit two nuclear power plants to expand their onsite storage of high-level waste. The petitioners in that case had argued that to do so would violate both the Atomic Energy Act and NEPA. The court recognized NRC's authority to consider the problem of waste disposal in a rulemaking proceeding (*id.* at 416) and remanded for further consideration of the Commission's conclusion that means of disposal would be available by the time the plants' operating licenses expired. *Id.* at 418-419. In response to that decision NRC undertook a generic "waste confidence" proceeding to determine the degree of assurance it had in proposed methods of waste storage and disposal. 44 Fed. Reg. 61372 (1979). More than 50 participants, including 20 states, have taken part in that proceeding. A hearing was held before the NRC Commissioners in January 1982.[20]

c. Since 1959, before the first commercial power plants were licensed, Congress has been aware of the absence of a permanent waste disposal facility. In virtually every year since then the question of radioactive waste disposal has been reviewed by the committees charged with oversight of NRC's and DOE's activities.[21] Moreover, within the last decade a number of bills proposing a mora-

---

[20] In *Potomac Alliance* v. *NRC*, No. 80-1862 (D.C. Cir. July 20, 1982), a case presenting the same issue as *Minnesota* v. *NRC*, the District of Columbia Circuit again declined to disturb license amendments to increase the spent fuel storage capacity at Virginia Electric Power Company's North Anna Nuclear Power Station. The court suggested that it would reconsider its decision if the "waste confidence" proceeding were not concluded by June 30, 1983. Slip. op. 4. We are informed by the NRC that it intends to reach a decision before that date.

[21] For a partial list of the relevant hearings, see *NRDC* v. *NRC*, *supra*, slip op. 23-24 & n.60 (Wilkey, J., dissenting); *NRDC* v. *NRC*, *supra*, 582 F.2d at 170-171 & n.8.

torium on the construction of plants have been introduced in Congress;[22] none has been reported out of committee. "[T]his history [demonstrates] a *de facto* acquiescence in and ratification of the Commission's licensing procedure by Congress." *Power Reactor Development Co.* v. *Electricians, supra*, 367 U.S. at 409; *NRDC* v. *NRC, supra*, 582 F.2d at 174 n.13.

The disposal of nuclear waste is a national problem that requires a national solution. Congress, the NRC, and DOE are working toward such a solution. For California to ban the construction of new nuclear power plants until its Energy Commission and legislature are themselves satisfied with the prospects for storage and disposal creates precisely the system of dual regulation which the Act forbids. Sections 25524.1(b) and 25524.2 are thus preempted by NRC's regulations. *Fidelity Federal Savings & Loan Association* v. *de la Cuesta*, No. 81-750 (June 28, 1982), slip op. 9-16.

B. California's Nuclear Laws Are Not Saved By Sections 271 And 274 Of The Atomic Energy Act

The court of appeals conceded that California was preempted by the Act from regulating the activities of federal licensees in order to protect against radiation hazards (Pet. App. 33-36). It nevertheless concluded that the state's regulation of waste disposal was consistent with the Act because it was "expressly authorized under sections 271 and 274(k) of the [Act]" (Pet. App. 40). The court erred in its interpretation of those sections.

---

[22] See, *e.g.*, S. 1217, 93d Cong., 1st Sess. (1973); H.R. 4971, 94th Cong., 1st Sess. (1975); H.R. 11880, 94th Cong., 1st Sess. (1976); H.R. 881, 95th Cong., 1st Sess. (1977); H.R. 882, 95th Cong., 1st Sess. (1977); H.R. 336, 96th Cong., 1st Sess. (1979); H.R. 3581, 96th Cong., 1st Sess. (1979); H.R. 3698, 96th Cong., 1st Sess. (1979); H.R. 3832, 96th Cong., 1st Sess. (1979); S. 1178, 96th Cong., 1st Sess. (1979); H.R. 751, 97th Cong., 1st Sess. (1981); H.R. 2800, 97th Cong., 1st Sess. (1981).

1. *Section 271 does not authorize a state to condition power plant construction on a utility's plan for storage and disposal of spent fuel*

Section 271 of the Act, 42 U.S.C. 2018, provides that states shall have authority to regulate "the generation, sale, [and] transmission of electric power produced through the use of nuclear facilities licensed by the [NRC.]" That provision does not vest in the states a power to regulate those aspects of electrical generation which are unique to nuclear plants—matters as to which the states had played no role at all in 1954. Instead, Section 271 envisions state control over such matters as the need for additional power, cf. *Vermont Yankee Nuclear Power Corp.* v. *NRDC*, *supra*, 435 U.S. at 550, the rates to be charged, and the manner in which power is to be distributed.

a. Respondents have argued, and the court of appeals believed (Pet. App. 38-40), that § 25524.2 was a measure simply regulating the cost of electricity to California ratepayers. The argument made by the state was this: If no means of disposal is developed, the hazards posed by highly radioactive waste produced in nuclear reactors will inevitably move the NRC to order operating power plants to shut down. When a reactor is shut down, however, the consumers whom it served will either be deprived of electricity or turn elsewhere, and pay higher rates, to satisfy their needs. Section 25524.2 protects ratepayers against this expense by preventing its cause from occurring; the solution is simply to build safer kinds of power plants. The ban is not absolute: when nuclear plants no longer present radiation hazards which could force a shutdown, they may be built. To put it in other terms, California has determined that the cure (shutdown) for the health hazards created by radiation will be an expensive one for California ratepayers, and has devised its own preventive medicine to solve the problem.[23]

---

[23] California might also conceivably argue that the costs of disposal itself are uncertain, and ultimately make an investment in

Only by a sleight of hand can such a law be seen as falling within the area left to the states by Section 271 of the Act. The judgment which underlies § 25524.2 (that wastes from reactors built today are likely to create radiation hazards) is indistinguishable from the judgment made by Minnesota in *Northern States Power Co.* v. *Minnesota*, *supra* (that liquid and gaseous wastes released from reactors are likely to pose radiation hazards). The only difference between the two cases is that Minnesota based its concern on the primary effect of radiation exposure (danger to health), whereas California has asserted an interest in a secondary effect (the expense of minimizing danger to health). But the state's motive is irrelevant to its ability to make a judgment which Congress has reserved to the NRC. Congress undoubtedly believed in 1954, as it did in 1959, that "the technical safety considerations are of such complexity that it is not likely that any State would be prepared to deal with them during the foreseeable future." S. Rep. No. 870, *supra*, at 3. Moreover, the subject was one "as to which interstate, national, or international considerations may be paramount * * *." *Ibid.* Whether there is a threat of harm from radiation is not a question which state utility commissions have traditionally decided. Sec-

---

nuclear facilities less financially attractive for ratepayers than an investment in, for example, a coal-fired plant. Section 25524.2 plainly is not adapted to that purpose, however, since it permits construction of nuclear plants once "there exists a demonstrated technology" for disposal, and does not make the cost of disposal an additional condition. Moreover there is little evidence that the state in fact based its moratorium on this theory. It is not suggested in either the committee report accompanying the moratorium bills, see Assembly Committee on Resources, Land Use, and Energy, *Analysis of the Resources, Land Use, and Energy Committee's Nuclear Energy Legislative Package, ABs 2820, 2821, 2822, 2823* (Mar. 8, 1976), or the committee's analysis of Proposition 15 and its alternatives, see Assembly Committee on Resources, Land Use, and Energy, *Reassessment of Nuclear Energy in California, A Policy Analysis of Proposition 15 and Its Alternatives* (May 10, 1976) (*Reassessment*).

tion 271 gives them no authority to do so, whether their concern is for their citizens' health or their citizens' pocketbooks.

That is not to say that the state may not protect its citizens against exorbitant utility costs. California still retains control over the rates to be charged for power distributed intrastate. Moreover, it may be appropriate for the state to inquire, before issuing a certificate of public convenience and necessity for a new plant, Cal. Pub. Util. Code § 1001 (West Supp. 1982), what will be the costs of waste disposal. The state's Public Utilities Commission has in the past conditioned certification on applicants' willingness to absorb unjustified costs, see *In re Southern California Edison*, 60 Cal. P.U.C. 410, 429 (1962); *In re Pacific Lighting Gas Supply Co.*, 59 Cal. P.U.C. 444, 451, 43 Pub. Util. Rep. 3d (PUR) 486, 493 (1962), and there are reliable estimates available from which it might calculate the costs of disposal.[24] In addition, the Atomic Energy Act provides a means by which the state may secure consideration for its concern that means of disposal may not be available for spent fuel produced by any new nuclear power plants. Section 274(*l*), 42 U.S.C. 2021(*l*), provides that before a plant is licensed by the NRC, the Commission "shall afford

---

[24] See, *e.g.*, DOE/NE-0007, *supra*, at III-69 to III-75, VI-13 to VI-14 ("costs could range between 0.8 and 2.0 mills/kWh * * *. This compares favorably with 30-40 mills/kWh for delivered electricity."); International Nuclear Fuel Cycle Evaluation, *Waste Management and Disposal, Report of Working Group 7*, 9-10 (Jan. 1980); Department of Energy, DOE/SR-0006, *Report On Fee For Spent Nuclear Fuel Storage and Disposal Services* (Oct. 1980).

California actually considered, in passing the Nuclear Laws, the possibility that the state Energy Commission could perform this function "through reviews of the economics and reliability of the plant * * *. The commission would probably have to set these conditions on a case-by-case basis, though." *Reassessment*, *supra*, at 153. It rejected the feasibility of the suggestion, in large part because "three of the five commissioners have expressed pro-nuclear positions in public." *Id.* at 154.

reasonable opportunity for State representatives to offer evidence, interrogate witnesses and advise the Commission as to the application * * *." NRC has implemented that statutory command with regulations. 10 C.F.R. Part 2. The state may also participate in the licensing process for both storage, 10 C.F.R. 72.34, and disposal facilities, 10 C.F.R. 60.61-60.63. In addition, the state may participate in rulemaking designed to resolve generic issues regarding waste disposal. 10 C.F.R. 2.802, 2.805. The only thing the Act precludes the state from doing is rejecting the NRC's judgment, at the conclusion of such proceedings, that adequate means of storage and disposal are or will be available in time to prevent any radiation hazard which might otherwise be posed by waste generated at the plant.

b. Section 25524.1(b), which regulates storage rather than disposal, is no more defensible under Section 271 than is its companion. The purported justification for requiring available storage throughout the useful life of the plant is to prevent the costs which might be incurred if the hazards from unstored spent fuel were to force a shutdown. Unless the state is satisfied about the availability of storage, § 25524.1(b) requires utilities to employ energy sources which do not present such hazards.[25] Once again, however, the question whether storage availability will suffice to prevent any harm from radiation is not a question which state utility commissions have traditionally decided. Insofar as the issue turns on the development of techniques such as dry storage and fuel rod disassembly (see note 19, *supra*), or on the likelihood that proposed facilities or modifications to existing plants will meet NRC licensing standards, it involves "technical

---

[25] It is difficult to argue that § 25524.1(b), any more than § 25524.2, is concerned with the costs of disposal itself. Like its companion provision, § 25524.1(b) permits construction of nuclear plants without regard for the costs of storage, provided that "facilities with adequate capacity * * * are in actual operation or will be in [actual] operation * * *."

safety considerations * * * of such complexity" that Congress entrusted it to the judgment of the NRC. See S. Rep. No. 870, *supra*, at 3.[26]

2. *Section 274 does not authorize a state to directly regulate preempted activities for economic motives*

Read in the context of the 1959 amendment to the Atomic Energy Act, Section 274(k), 42 U.S.C. 2021(k), clearly does nothing more than preserve that state authority which already existed under the 1954 Act. Thus what was said in the last section about state power under Section 271 is sufficient to dispose of any contention that Section 274(k) authorized California to enact its Nuclear Laws. The court of appeals, however, read Section 274(k) as an affirmative grant of authority "to regulate 'for purposes other than protection against radiation hazards.'" (Pet. App. 33). In doing so the court assumed that the word "purpose[]" in the Act was equivalent to "motive," and concluded that since California's motive for passing the Nuclear Laws was economic, they were not preempted.

a. This Court has long recognized the irrelevance of legislative motives to questions of preemption.

> We can no longer adhere to the aberrational doctrine * * * that state law may frustrate the operation of federal law as long as the state legislature in

---

[26] The state's justification for requiring full core reserve storage capacity is probably to avoid additional costs in case of reactor repairs which might require removal of the core. Storage elsewhere might prolong the shutdown period required to make the repairs. NRC regulations do not require full core reserve storage capacity. Moreover, it is difficult to imagine a more blatant interference with the functions reserved to the NRC than state efforts to dictate either where spent fuel should be stored or how reactors should be designed. A state is free to protect its ratepayers against the costs of repair either by fixing rates directly, or by taking such cost projections into account in its initial decision about whether to issue a certificate of public convenience and necessity.

> passing its law had some purpose in mind other than one of frustration. Apart from the fact that it is at odds with the approach taken in nearly all our Supremacy Clause cases, such a doctrine would enable state legislatures to nullify nearly all unwanted federal legislation by simply publishing a legislative committee report articulating some state interest or policy—other than frustration of the federal objective—that would be tangentially furthered by the proposed law.

Perez v. *Campbell*, 402 U.S. 637, 651-652 (1971); *Florida Lime & Avacado Growers, Inc.* v. *Paul*, 373 U.S. 132, 142 (1963). It is true that a due regard for principles of federalism counsels against a finding of "withdrawal from the States of power to regulate where the activity regulated was a merely peripheral concern of the [federal law]." *San Diego Building Trades Council* v. *Garmon*, 359 U.S. 236, 243 (1959); *Chicago & North Western Transportation Co.* v. *Kalo Brick & Tile Co.*, *supra*, 450 U.S. at 317; *DeCanas* v. *Bica*, 424 U.S. 351, 360-361 (1976); *Merrill Lynch, Pierce, Fenner & Smith* v. *Ware*, 414 U.S. 117, 127, 135 (1973). And the absence of any substantial overlap is sometimes expressed in shorthand form by saying that the state and federal laws may be reconciled because they have different "purposes." *Huron Cement Co.* v. *Detroit*, 362 U.S. 440, 445 (1960); *Ray* v. *Atlantic Richfield Co.*, 435 U.S. 151, 164 (1978). But where state law conflicts with an express direction of federal law, or operates in a field reserved for federal action, or frustrates the objectives Congress sought to accomplish, the shorthand expression that state and federal law have different "purposes" becomes misleading, because it implies that Congress's "purpose" may still be given effect.

Congress clearly understood those principles when it enacted Section 274(k). The function of that clause was "to leave room for [state laws] * * * dealing with matters *on the fringe of the preempted area* in the light of all the provisions and purposes of the Atomic Energy

Act * * *." *Federal-State Hearings*, *supra*, at 500 (emphasis added). Moreover, the court of appeals recognized that "[s]tate regulations which directly conflict with regulations of the NRC would, of course, be preempted even if they were enacted for purposes other than protection against radiation hazards. If the NRC required a nuclear plant to be constructed in a certain way for safety reasons, for example, a state could not require the plant to be constructed some other way for environmental reasons" (Pet. App. 33 n.29).

The court may have believed that this case was different because the activities which California has forbidden were merely *permitted*, not *required*, by the NRC. If so the court misapprehended Congress's objectives in passing the Atomic Energy Act. In the first place, as Part III demonstrates, the activities which California has forbidden are not simply *permitted*, but *encouraged*, by federal law. In the second place, Congress did not only permit the NRC to make judgments about the likelihood of radiation hazards, it gave it exclusive authority to do so. *Federal-State Hearings*, *supra*, at 492-493; S. Rep. No. 870, *supra*, at 8; 10 C.F.R. § 8.4(c), (i). In part it did so because it believed that "the technical safety considerations are of such complexity that it is not likely that any State would be prepared to deal with them during the foreseeable future." S. Rep. No. 870, *supra*, at 3. In part it believed that those were questions "as to which interstate, national, or international considerations may be paramount * * *." *Ibid.* In deciding not to permit new construction of nuclear power plants, however, California has made precisely such a judgment. That its motive for doing so was economic is irrelevant.

b. Even if the motives of the California legislature were relevant in this case, there is little reason to believe that Section 274(k) authorizes the state's regulation of nuclear waste storage and disposal. The court of appeals assumed, without the benefit of any district court find-

ings,[27] that the moratorium was enacted for economic reasons. Absent a factual inquiry it is difficult to say whether that is so. It is nonetheless fairly clear that whatever financial concerns California had came as something of an afterthought. The 1976 Nuclear Laws were passed as an alternative to Proposition 15, an initiative submitted to California's voters in June of 1976.[28] Like § 25524.2, Proposition 15 barred construction of new nuclear power plants unless a permanent method of waste disposal was developed, though Proposition 15 gave as the reason for its concern the threat of harm to "the land or the people of * * * California" (81-1944 Pet. App. 23).

Other provisions in the Nuclear Laws are less guarded in their statement of reasons for the moratorium. Cal. Pub. Res. Code § 25524.3(b) (West Cum. Supp. 1982), for example, requires the state Energy Commission to undertake a study of undergrounding and berm containment of nuclear reactors, to determine whether such construction techniques are necessary for "enhancing the public health and safety at a site and related facility * * *."[29]

---

[27] Both of the cases consolidated in the court of appeals were decided on summary judgment in the district court. *Pacific Gas & Electric Co.* v. *State Energy Resources Conservation and Development Commission*, 489 F. Supp. 699 (E.D. Cal. 1980); *Pacific Legal Foundation* v. *State Energy Resources Conservation and Development Commission*, 472 F. Supp. 191 (S.D. Cal. 1979). In neither case did the district court explore the issue of the state's motive for passing the nuclear moratorium.

[28] By their terms the Nuclear Laws would not have become operative if Proposition 15 had been adopted. Cal. Pub. Res. Code § 25524.2, Historical Note (West 1977).

[29] In addition to the three bills enacted as the Nuclear Laws, the Assembly Committee on Resources, Land Use, and Energy passed in conjunction with them a fourth, AB 2823. It, like Proposition 15, purported to lift the ceilings on liability imposed by the Price-Anderson Act. See *Analysis of ABs 2820, 2821, 2822, 2823*, *supra*, at 2-3; 81-1944 Pet. App. 23 (Proposition 15 forbade construction pending repeal of the Price-Anderson Act). AB 2823 was defeated in the Assembly Ways and Means Committee. *Reassessment*, *supra*, at 154.

The *Reassessment*, though it speaks occasionally of economic issues related to nuclear plants, *id.* at 27-30, 109, draws no more explicit conclusion than that "the cost difference between coal fired plants and nuclear plants is not so clear." *Ibid.* That the state's financial concerns were not sufficiently serious to guarantee passage of the Nuclear Laws is made clear by the *Reassessment*, published shortly before the initiative was defeated. It stated: "if the Initiative fails and the bills have not passed, the impetus which makes the bills attractive would fade. As a result, the bills would probably never be enacted either." *Id.* at 157. Indeed, the committee report accompanying the Nuclear Laws explicitly addressed the question whether they were preempted by the Atomic Energy Act. It did not conclude—as the court of appeals and respondents have urged—that the state could act because its objective was financial. Rather, referring to *Colorado Public Interest Research Group* v. *Train*, 507 F.2d 743 (10th Cir. 1974), rev'd, 426 U.S. 1 (1976), it opined that "the states most probably will have a delegated direct regulatory role if the Supreme Court affirms." *Analysis of ABs 2820, 2821, 2822, 2823, supra*, at 4.[30]

III. CALIFORNIA'S BAN ON THE CONSTRUCTION OF NUCLEAR POWER PLANTS FRUSTRATES THE ATOMIC ENERGY ACT'S PURPOSE TO DEVELOP THE COMMERCIAL USE OF NUCLEAR POWER

The Atomic Energy Act demonstrates a clear purpose to encourage the commercial development and use of nuclear energy. To uphold California's ban on the construction of nuclear power plants would nullify this ob-

---

[30] By contrast, both the California Attorney General and the California Legislative Counsel concluded that the Nuclear Laws were unconstitutional. 61 Op. Cal. Att'y Gen. 159, 173 & n.39 (1978).

jective of the Act, and would be unnecessary for the accomplishment of any purpose articulated by the state.

A. A Primary Purpose Of The Atomic Energy Act Is To Promote The Commercial Use Of Nuclear Power

The Atomic Energy Act opens with this statement of policy: "[T]he development [and] use * * * of atomic energy shall be directed so as to make the maximum contribution to the general welfare * * *." 42 U.S.C. 2011 (a). The next section states the findings of Congress: "The development [and] utilization * * * of atomic energy for military and for all other purposes are vital to the common defense and security." 42 U.S.C. 2012(a). The following section enumerates Congress's purposes in passing the Act. It begins with the need to foster research and development of nuclear energy, 42 U.S.C. 2013(a), to provide for the dissemination of information about nuclear energy, 42 U.S.C. 2013(b), and to provide

> (d) a program *to encourage widespread participation in the development and utilization of atomic energy* for peaceful purposes *to the maximum extent* consistent with the common defense and security and with the health and safety of the public.

Ibid. (emphasis added). To the same end the Act states that "[f]unds of the United States may be provided *for the development and use of atomic energy* * * *." 42 U.S.C. 2012(g).[31] See also 42 U.S.C. 2051(a)(4).

The House and Senate Reports which accompanied the Act refer to "the goal of atomic power at competitive prices * * *." H.R. Rep. No. 2181, 83d Cong., 2d Sess. 3 (1954); S. Rep. No. 1699, 83d Cong., 2d Sess. 3 (1954). Outlining the structure of federal and private cooperation to accomplish that goal, the Reports state Congress's desire for "the speediest possible attack on the goal of

---

[31] We are informed by the Department of Energy that its budget authority for nuclear energy research and development and for uranium enrichment for fiscal years 1976-1982 (the period since passage of California's moratorium) has been $9.722 billion.

peacetime power." H.R. Rep. No. 2181, *supra*, at 9; S. Rep. No. 1699, *supra*, at 9. In short, the Act authorized the private use of nuclear energy "in the hope and belief that the substantial entry of private industry into the atomic energy program would speed the further development of the peaceful uses of atomic energy, a major policy goal of the United States." H.R. Rep. No. 883, 89th Cong., 1st Sess. 4 (1965).

Within a few years after passage of the Act it became apparent that further incentives were required to make commercial development of nuclear power an attractive investment. The risk of liability from a nuclear accident was the major obstacle. Congress responded by passing the Price-Anderson Act, 42 U.S.C. 2210, "[i]n order to protect the public and *to encourage the development of the atomic energy industry* * * *." 42 U.S.C. 2012(i) (emphasis added). See *Duke Power Co.* v. *Carolina Environmental Study Group, Inc.*, *supra*, 438 U.S. at 63-67; S. Rep. No. 296, 85th Cong., 1st Sess. 1 (1957).[32]

---

[32] The court of appeals suggested (Pet. App. 43-45) that legislation since 1974 has indicated a "change in congressional outlook" regarding the commercial development of nuclear power. The court was mistaken. Its suggestion ignores the fact that Congress in 1975 extended the Price-Anderson Act's coverage until 1987. Pub. L. No. 94-197, Sections 2-14, 89 Stat. 1111-1115. It also overlooks the Powerplant and Industrial Fuel Use Act of 1978, 42 U.S.C. (Supp. IV) 8301 *et seq.*, which precludes reliance on natural gas and petroleum as primary energy sources in new power plants, Sections 8301(b)(3), 8311, 8312(a), and thereby increases our dependence on nuclear power, among other energy sources, Sections 8302(a)(6)(A), 8401.

The court argued that the Energy Reorganization Act of 1974, 42 U.S.C. (& Supp. IV) 5801 *et seq.*, marked a decisive turn away from nuclear energy. The court cited in particular (Pet. App. 43) passages in the Senate Report expressing "deep concerns regarding the possibility of a pro-nuclear bias in ERDA." S. Rep. No. 93-980, 93d Cong., 2d Sess. 26-27 (1974). But the Energy Reorganization Act only repealed Sections 21 and 22 of the Atomic Energy Act, which established and organized the Atomic Energy Commission. See 42 U.S.C. 5814(a). It otherwise preserved the AEC's functions intact, and in fact augmented them. 42 U.S.C. 5843, 5844, 5847; 42 U.S.C. (Supp. IV) 5850. Moreover the House bill, unlike the Sen-

This Court has repeatedly recognized Congress's aim to encourage the commercial development of nuclear energy. See, *e.g.*, *Duke Power Co.*, *supra*, 438 U.S. at 63-64,

---

ate version, expressed no concern about giving unwarranted priority to nuclear power. See H.R. Rep. No. 93-707, 93d Cong., 1st Sess. (1973). The bill reported by the conference committee "rephrased the language on priorities in positive terms and eliminated the anti-nuclear bias of the Senate Bill." Murphy and LaPierre, *supra*, 76 Colum. L. Rev. at 409 n.99; H.R. Rep. No. 93-1445, 93d Cong., 2d Sess. 25 (1974). See also Palfrey, *Energy and the Environment: The Special Case of Nuclear Power*, 74 Colum. L. Rev. 1375, 1404-1405 (1974).

Equally unpersuasive is the court's suggestion (Pet. App. 44) that Congress signalled a change of heart when it passed the Federal Nonnuclear Energy Research and Development Act of 1974, 42 U.S.C. 5901 *et seq.* That Act explicitly provides that "the policies and provisions of the Atomic Energy Act of 1954 [42 U.S.C. 2011 *et seq.*], and other provisions of law shall continue to apply to the nuclear research, development, and demonstration program." 42 U.S.C. 5902(b)(2). And it would make little sense to argue that the clear purpose of the Atomic Energy Act is rendered ambiguous because Congress has also chosen to pursue alternative energy sources. One could as well argue that the Federal Aviation Act, 49 U.S.C. 1303(a), does not mean to promote air commerce because Congress has also encouraged the development of surface transportation. 49 U.S.C. at 1429 (National Transportation Policy). See *City of Burbank* v. *Lockheed Air Terminal, Inc.*, 411 U.S. 624 (1973).

The court also found in the Clean Air Act Amendments of 1977, 42 U.S.C. (Supp. IV) 7422, a greater congressional willingness to accept state controls on nuclear energy (Pet. App. 44). In particular the court noted that the Amendments "were intended to overturn the holding of *Northern States Power Co.* v. *Minnesota* * * * in the specific context of regulation of radioactive air pollutants" (Pet. App. 44 n.38). But see *Illinois* v. *General Electric Co.*, *supra*, slip op. 16-17. The court of appeals found a similar indication of congressional disillusionment with nuclear power in the NRC Authorization Act for Fiscal Year 1980, Pub. L. No. 96-295, 94 Stat. 780, 783, which recognizes state authority to enact siting and land use requirements which affect nuclear plants (Pet. App. 45). But of course the fact that state zoning laws might have some incidental effect on reactor licensing has long been acknowledged. See *Federal-State Hearings*, *supra*, at 500. And the fact that the states have some authority to regulate in the context of air pollution does not entail the conclusion that the states may regulate for other pur-

83-84; *Vermont Yankee Nuclear Power Corp.* v. *NRDC*, *supra*, 435 U.S. at 557-558; *Northern States Power Co.* v. *Minnesota*, *supra*, 447 F.2d at 1153-1154, aff'd mem., 405 U.S. 1035 (1972). Executive support for the program has been equally firm. See Statement Announcing a Series of Policy Initiatives, 17 Weekly Comp. of Pres. Doc. 1101 (Oct. 8, 1981).

B. California's Nuclear Laws Frustrate This Purpose Of The Atomic Energy Act

"Even where Congress has not completely displaced state regulation in a specific area, state law is nullified to the extent that it actually conflicts with federal law. Such a conflict arises when * * * state law 'stands as an obstacle to the accomplishment and execution of the full purposes and objectives of Congress,' *Hines* v. *Davidowitz*, 312 U.S. 52, 67 (1941)." *Fidelity Federal Savings & Loan Association* v. *de la Cuesta*, *supra*, slip op. 10. The relevant congressional purpose cannot, of course, simply be a general "'national policy,'" like "'favoring free competition.'" *Commonwealth Edison Co.* v. *Montana*, *supra*, 453 U.S. at 633, quoting *Exxon Corp.* v. *Governor of Maryland*, 437 U.S. 117, 133 (1978). As the preceding section made clear, however, the objective of the Atomic Energy Act to promote the use of nuclear power in com-

---

poses, see *Train* v. *Colorado Public Interest Research Group, Inc.*, *supra*; Stensvaag, *State Regulation of Nuclear Generating Plants Under the Clean Air Act Amendments of 1977*, 55 S. Cal. L. Rev. 511, 527 (1982), much less that they can prohibit construction of nuclear power plants altogether, *id.* at 540 & n.146. Indeed, an effort to overrule *Northern States Power Co.* v. *Minnesota* generally was defeated on the floor of the House. See 119 Cong. Rec. 21189-21199 (1973). The important difference for preemption purposes between what is permitted by the Clean Air Act Amendments and the NRC Authorization Act, on the one hand, and what California is trying to do, on the other, is that only the former has been expressly authorized by Congress. See *Commonwealth Edison Co.* v. *Montana*, 453 U.S. 609, 635 (1981); *Huron Cement Co.* v. *Detroit*, *supra*, 362 U.S. at 445-446.

mercial electrical generating facilities is statutorily explicit and obviously important. It has been repeatedly recognized by this Court and reaffirmed by those charged with implementing Congress's mandate.

1. ***The development of nuclear power is an issue of national concern which cannot be foreclosed by local decisions***

It is inconceivable that Congress intended to allow such an express and vigorous purpose to be completely nullified by state laws forbidding the construction of nuclear power plants. The court of appeals was correct in stating that Congress has not shown "an attempt to promote nuclear power at all costs" (Pet. App. 42). It erred in concluding from that premise that Congress's purpose to encourage private development of nuclear power was defeasible by any state law which claimed to pursue ends other than protection against radiological hazards. Sections 271 and 274 (k), 42 U.S.C. 2018, 2021(k), upon which the court placed great reliance, are not an affirmative grant of power to the states to impede the developmental purpose of the Atomic Energy Act. Their function is "to leave room for [state laws] * * * dealing with matters on the fringe of the preempted area *in the light of all the provisions and purposes of the Atomic Energy Act* * * *." *Federal-State Hearings*, *supra*, at 500 (emphasis added).

This Court has considered a problem analogous to that presented by California's Nuclear Laws in connection with the Federal Power Act, 16 U.S.C. 791a *et seq.* In *First Iowa Hydro-Electric Cooperative* v. *FPC*, 328 U.S. 152 (1946), the Court noted that the Federal Power Act requires applicants for hydroelectric power licenses to make a showing of compliance with relevant state laws, and leaves to the states the regulation of services and rates for power produced by such plants. *Id.* at 160-161 & n.6, 175 n.19. The Court nevertheless held that Iowa's refusal to allow construction of a facility approved by the FPC would frustrate the "determination of Congress [in the Act] to make progress with the development of the long idle water power resources of the Nation * * *."

Id. at 171. See also *City of Tacoma* v. *Taxpayers*, 357 U.S. 320 (1958); *Arizona* v. *California*, 373 U.S. 546, 587 (1963).

Congress was aware in 1954 of the similarity between the Federal Power Act and the Atomic Energy Act. For example, Senator Humphrey succeeded on the Senate floor in adding to the Act Section 272, 42 U.S.C. 2019, which provides that every licensee of a nuclear power plant who transmits or sells electric energy at wholesale in interstate commerce "shall be subject to the regulatory provisions of the Federal Power Act * * *." In support of the amendment he argued: "The Government has a greater monopoly upon atomic energy than it does upon rivers and streams, because under the Constitution we are limited to navigable waters." 100 Cong. Rec. 12201 (1954). See also Murphy & LaPierre, *supra*, 76 Colum. L. Rev. at 448-450. What this Court said in *First Iowa* about the development of hydroelectric power is thus equally applicable to Congress's intent to promote nuclear power:

> It is the [federal government] rather than the [California Energy Commission] that under our constitutional Government must pass upon these issues on behalf of the people of [California] as well as on behalf of all others.

328 U.S. at 182.[33]

Moreover, it is clear that California's effort to halt construction of nuclear power facilities cannot properly be considered in isolation under the Supremacy Clause. *City of Burbank* v. *Lockheed Air Terminal, Inc.*, 411 U.S. 624, 639 (1973); cf. *Edgar* v. *Mite Corp.*, No. 80-1188 (June

---

[33] There is this difference between the two Acts: the decision in *First Iowa* suggests that a hydro-electric facility might be built even though the state believed it did not need additional electrical power. But see 328 U.S. at 169 n.16. By contrast, the Atomic Energy Act leaves decisions about need and cost up to the states. See *Vermont Yankee Nuclear Power Corp.* v. *NRDC*, *supra*, 435 U.S. at 550. But the point made above is simply that a state—once it decides there is a need for additional power—may not forbid the satisfaction of that need by a form of energy which Congress has attempted to develop.

23, 1982), slip op. 17. If California's moratorium is upheld in this case, there is little to distinguish it from statutes already passed by a number of other states.[34] And given the provincial response by more than 30 states to the problem of radioactive waste disposal,[35] it is likely California's scheme, if approved, would be still more widely copied. The result would be the virtual elimination of nuclear power as a potential energy source, in direct conflict with Congress's purpose in the Atomic Energy Act "to encourage widespread participation in the development and utilization of atomic energy * * *." 42 U.S.C. 2013(d).

---

[34] At least five states have, like California, conditioned the construction of future nuclear power plants on the availability of permanent waste disposal facilities: Conn. Gen. Stat. Ann. § 22a-136 (West Cum. Supp. 1982); Me. Rev. Stat. Ann. tit. 10 §§ 251-256 (1980); see 1982 Me. Acts ch. 643 (to be codified at Me. Rev. Stat. Ann. tit. 10, § 166); Mont. Code Ann. §§ 75-20-1201 to 75-20-1205 (1981); Or. Rev. Stat. § 469.595 (1981); Wisconsin, see 9 Envir. Rep. (BNA) 707-708 (Aug. 15, 1978). See also Md. Ann. Code art. 78, § 54A (Supp. 1981); Mass. H. Res. No. 5888 (1979).

Other states have adopted procedural impediments which make construction of nuclear plants unlikely: Alaska Stat. § 18.45.025 (Cum. Supp. 1981) (approval by legislature, governor, and municipality); Hawaii Const. art. XI, § 8 (Hawaii Rev. Stat. (Supp. 1981)) (2/3 majority of each house of the legislature); R.I. Gen. Laws § 42-64-14.1 (1977) (approval by legislature); Vt. Stat. Ann. tit. 30, § 248(c) (Cum. Supp. 1982) (approval by legislature); Wash. Rev. Code Ann. § 80.50.100 (Cum. Supp. 1982) (approval by governor). See also Mont. Code Ann. § 75-20-201 (1981) (approval by statewide referendum).

[35] More than 30 state laws forbid or otherwise restrict the transportation or disposal of high-level waste. They are summarized in NRC's periodical publication, *Information Report on State Legislation.* See also Jaksetic, *Constitutional Dimensions of State Efforts to Regulate Nuclear Waste,* 32 S.C. L. Rev. 789, 824-849 (1981); *Washington State Building & Construction Trades Council* v. *Spellman,* No. 81-3453 (9th Cir. Aug. 17, 1982); *Illinois* v. *General Electric Co., supra.*

2. *Even if concurrent state regulation were permitted, it would have to be narrowly drawn and nondiscriminatory*

Even where Congress has envisioned a role for state law to play, if it threatens the effectiveness of the federal plan it must be "restricted to the narrowest of limits * * *." *Hines* v. *Davidowitz*, *supra*, 312 U.S. at 68; *Castle* v. *Hayes Freight Lines, Inc.*, 348 U.S. 61, 64 (1954). See also *Ray* v. *Atlantic Richfield Co.*, *supra*, 435 U.S. at 172-173 & n.25 (of the alternative safety requirements imposed by state law—design specifications and tug escort—the latter was permissible because it did not " 'stan[d] as an obstacle to the accomplishment and execution of the full purposes and objectives of Congress' "); *Chicago* v. *Atchison, T. & S.F. Ry.*, 357 U.S. 77, 88-89 (1958). This Court has also been alert in preemption cases to examine the conviction with which asserted state concerns are held, and has looked with disfavor on state laws which impose unusual restrictions upon the objects of federal concern. See, *e.g.*, *Campbell* v. *Hussey*, 368 U.S. 297, 300-301 n.3 (1961); *Chicago* v. *Atchison, T. & S.F. Ry.*, *supra*, 357 U.S. at 80-81; *Jones* v. *Rath Packing Co.*, 430 U.S. 519, 542-543 (1977); *Toll* v. *Moreno*, No. 80-2178 (June 28, 1982), slip op. 8-15; *Hines* v. *Davidowitz*, *supra*, 312 U.S. at 65.

In this case California's concern that new nuclear power plants may have to be shut down would be completely satisfied by an assurance that storage for high-level waste will be available throughout the useful life of the plant—a period of approximately 40 years. The state has attempted to provide itself that assurance in § 25524.1(b), which requires the Energy Commission to "find on a case-by-case basis that facilities with adequate capacity * * * to store [spent] fuel * * * are in actual operation or will be in operation at the time such nuclear facility requires such * * * storage * * *." So far as a given plant's usefulness is concerned, there is no justification for going further and demanding federal approval of a "method for the permanent and terminal dis-

position of high-level nuclear waste." Cal. Pub. Res. Code § 22524.2(c) (West 1977).

It is particularly appropriate that the state should be required to pursue less restrictive regulatory techniques when the obstacles it sets for nuclear power are unique among California's laws, and there is substantial reason to doubt the importance to the state of its purported economic concerns. It was pointed out above, pages 28-30, that whatever financial concerns California may have had in passing the Nuclear Laws were at best something of an afterthought. The *Reassessment*, *supra*, at 109, recognized that "[o]il-fired plants are generally recognized to be the most expensive base-load source of electricity. However, the cost difference between coal fired plants and nuclear plants is not so clear." It also noted that the cost of coal-fired power "may change rapidly, too, as mining costs escalate and expensive pollution abatement equipment is added." *Ibid.* Yet only nuclear power plants, whose development the Atomic Energy Act seeks to encourage, are subject to a construction moratorium.

Even § 25524.1(b), which forbids construction until the Energy Commission has satisfied itself about the availability of storage, has no parallel in California's statutory scheme for utility regulation. Approval of coal-fired plants, for example, is not by statute made contingent on a showing of future mining or environmental protection costs. Moreover, there are methods of satisfying the state's purported concern which would be more sensitive to the conflicting federal interest. The state has in the past conditioned its approval of utility expansion on the shareholders' willingness to absorb unjustified costs. Page 24, *supra*. The same approach might be taken in this situation, by shifting to the utilities the risk of any shortfall in storage facilities.

CONCLUSION

The judgment of the court of appeals should be reversed.

Respectfully submitted.

REX E. LEE
Solicitor General

J. PAUL MCGRATH
Assistant Attorney General

LOUIS F. CLAIBORNE
Deputy Solicitor General

JOHN H. GARVEY
Assistant to the Solicitor General

LEONARD SCHAITMAN
AL J. DANIEL, JR.
Attorneys

SEPTEMBER 1982

☆ U. S. GOVERNMENT PRINTING OFFICE: 1982 382209 1084

Docket Sheet

NO. 81-1945-CFX	TITLE	Pacific Gas and Electric Company, et al., Petitioners
VIDE: 81-1944 denial		v. State Energy Resources Conservation & Development Commission, et al.

DOCKETED	COURT
Apr. 20, 1982	United States Court of Appeals for the Ninth Circuit

DATE	PROCEEDINGS AND ORDERS
	Counsel for Petitioners: John R. McDonough, Howard B. Soloway Counsel for Respondents: Laurence H. Tribe
Apr. 20, 1982	Petition for writ of certiorari filed. (Record filed).
Apr. 20, 1982	Appendix filed.
May 20, 1982	Brief, amicus curiae, of The Atomic Industrial Forum, in support of petition filed. (Vide: 81-1944).
May 20, 1982	Brief, amicus curiae, of Edison Electric Institute in support of petitioners filed.
May 21, 1982	Brief, amicus curiae, of The Legal Foundation of America, in support of petition filed. (Vide: 81-1944).
May 22, 1982	Brief, amicus curiae, for the U. S. filed. (Vide: 81-1944).
May 24, 1982	Brief for the respondents in opposition filed. (Vide: 81-1944).
May 26, 1982	DISTRIBUTED. 6-10.
June 4, 1982	Reply brief for the petitioner filed. (D).
June 14, 1982	REDISTRIBUTED. 6-17.
June 21, 1982	Petition GRANTED limited to the following questions: Whether petitioners' challenges to the provisions in the 1976 amendments to California's Warren-Alquist Act, Cal. Pub. Res. Code Sections 25524.1(b) and 25524.2 (West 1977), which condition the construction of nuclear plants on findings by the State Energy Resources Conservation and Development Commission that adequate storage facilities and means of disposal are available for high-level nuclear waste, are ripe for judicial review, and whether Sections 25524.1(b) and 25524.2 are pre-empted by the Atomic Energy Act of 1954, 42 U.S.C. Section 2001, et seq. ----------
July 16, 1982	Order extending time to file the joint appendix and petitioners' brief on the merits until Sept. 4, 1982.
July 23, 1982	Order extending time to file the respondents' brief on the merits until Nov. 3, 1982.
Aug. 9, 1982	Motion of New England Legal Foundation for leave to file a brief as amicus curiae Filed.
Sept. 1, 1982	Motion of Fusion Energy Foundation for leave to file a brief as amicus curiae filed.

(Over)

81-1945

Title

No.

DATE	PROCEEDINGS AND ORDERS
Sept. 3, 1982	Brief, amici curiae, of Pacific Legal Foundation, et al. in support of petitioners filed.
Sept. 2, 1982	Brief, amcus curiae, of The Atomic Industrial Forum in support of petitioners filed.
Sept. 3, 1982	Brief, amicus curiae, of Edison Electric Institute in support of petitioners filed.
Sept. 3, 1982	Brief, amicus curiae, for the U. S. filed.
Sept. 4, 1982	Joint appendix filed.
Sept. 4, 1982	Brief for the petitioners filed.
Sept. 7, 1982	Brief, amici curiae, of Hans A. Bethe, et al., in support of petitioners filed.
Sept. 3, 1982	Motion of the Solicitor General for leave to participate in oral argument as amicus curiae and for divided argument filed.
Sept. 10, 1982	Brief, amicus curiae, of The Legal Foundation of America filed.
Sept. 17, 1982	Order further extending time to file the respondents' brief on the merits until Nov. 22, 1982.
Oct. 4, 1982	The motion of New England Legal Foundation for leave to file a brief as amicus curiae is GRANTED. The motion of Fusion Energy Foundation for leave to file a brief as amicus curiae is GRANTED. The motion of the Solicitor General for leave to participate in oral argument as amicus curiae and for divided argument is GRANTED.
Oct. 5, 1982	Application by State of New York for leave to file amicus curiae brief in excess of page limitations, and order granting same by Rehnquist, J., 10/6/82, not to exceed 40 pages.
Nov. 10, 1982	Brief, amici curiae, of the States of Illinois and New Hampshire filed.
Nov. 7, 1982	Application for leave to file respondents' brief on the merits in excess of page limitations, and order granting same by Rehnquist, J., not to exceed 60 pages.
Nov. 18, 1982	Brief, amici curiae, by The States of Alaska, Arizona, et al. filed.
Nov. 22, 1982	Brief, amicus curiae, of the State of Maine filed.
Nov. 23, 1982	Brief, amici curiae, for The Public Utilities Commission of the State of California, et al. filed.
Nov. 23, 1982	Brief for the respondents filed.
Nov. 24, 1982	Brief, amicus curiae, for the State of Connecticut filed.

(Card No. 2)

NO. 81-1945-CFX	TITLE Pacific Gas and Electric Company, et al., Petitioners, v. State Energy Resources Conservation & Development Commission, et al.

DOCKETED	COURT
Apr. 20, 1982	United States Court of Appeals for the Ninth Circuit

DATE	PROCEEDINGS AND ORDERS
Nov. 26, 1982	Brief, amicus curiae, for the State of Oregon filed.
Nov. 26, 1982	Brief, amicus curiae, of the Commonwealth of Massachusetts filed.
Nov. 26, 1982	Brief, amicus curiae, of the State of Washington filed.
Nov. 26, 1982	Brief, amici curiae, of the State of Wisconsin, et al. filed.
Dec. 30, 1982	Reply brief for the petitioner filed. (D).
Jan. 17, 1983	ARGUED.